REEDSPORT FIRE STATION 7

95% CONSTRUCTION DOCUMENTS | BID / PERMIT SET

REEDSPORT FIRE DISTRICT
124 N 4TH ST.
REEDSPORT, OR 97467

ZCS ENGINEERING ARCHITECTURE
127 NW D Street, Grants Pass, Oregon 97526 | 541-479-3865

REEDSPORT FIRE DISTRICT
124 N 4TH ST.
REEDSPORT, OR 97467

REEDSPORT FIRE STATION 7

PROJECT NOTES

1. THIS PROJECT IS FUNDED BY A SEISMIC RETROFIT GRANT THROUGH THE STATE IFA AS WELL AS FUNDS FROM THE OWNER FOR THE REMODEL SCOPE OF WORK NOT ASSOCIATED WITH THE SEISMIC RETROFIT. THE DRAWINGS DISTINGUISH THE REMODEL SCOPE OF WORK FROM THE SEISMIC RETROFIT SCOPE OF WORK. ALL CONSTRUCTION RELATED BIDS SHALL SEPERATE SEISMIC RELATED SCOPE OF WORK FROM REMODEL RELATED SCOPE OF WORK AS INDICATED IN THE DRAWINGS.

1. ALL EXISTING CONDITIONS, DIMENSIONS AND ELEVATIONS SHALL BE FIELD VERIFIED. THE CONTRACTOR SHALL NOTIFY THE ENGINEER OF RECORD OF ANY SIGNIFICANT DISCREPANCIES FROM CONDITIONS SHOWN ON THE DRAWINGS.

2. THE GENERAL CONTRACTOR SHALL BE RESPONSIBLE FOR ALL CONSTRUCTION MEANS AND METHODS. RESPONSIBILITY SHALL INCLUDE BUT NOT LIMITED TO DEMOLITION AND CONSTRUCTION MEANS AND METHODS, TECHNIQUES, SEQUENCING, AND SAFETY REQUIRED TO COMPLETE CONSTRUCTION.

3. BEFORE STARTING A SECTION OF WORK THE CONTRACTOR SHALL CAREFULLY EXAMINE PREPARATORY WORK THAT HAS BEEN EXECUTED. ENSURE THAT WORK AND ADJACENT RELATED WORK WILL FINISH TO PROPER PLANES AND LEVELS.

4. CONTRACTOR SHALL BE RESPONSIBLE FOR PROVIDING ALL MATERIALS AND WORKMANSHIP IN ACCORDANCE WITH ALL APPLICABLE FEDERAL, STATE, AND LOCAL CODES.

5. CONTRACTOR IS RESPONSIBLE FOR CHECKING ALL CONTRACT DOCUMENTS, FIELD CONDITIONS, AND DIMENSIONS FOR ACCURACY AND CONFIRMING THAT WORK IS BUILDABLE AS SHOWN BEFORE PROCEEDING WITH THE CONSTRUCTION. IF THERE ARE ANY QUESTIONS, THE CONTRACTOR IS RESPONSIBLE FOR OBTAINING A CLARIFICATION FROM THE ARCHITECT BEFORE PROCEEDING WITH THE WORK IN QUESTION OR RELATE WORK.

6. THE CONTRACTOR SHALL NOT SCALE DRAWINGS. WRITTEN DIMENSIONS SHALL ALWAYS GOVERN. CONTRACTOR REQUIRING DIMENSIONS NOT NOTED SHALL ALWAYS CONTACT THE PROJECT TEAM FOR SUCH INFORMATION PRIOR TO PRECEDING WITH WORK RELATED TO THOSE DIMENSIONS

7. THE CONTRACTOR SHALL PROTECT, PATCH, AND REPAIR TO MATCH ANY WALLS, FLOORS, CEILINGS, AND/OR OTHER SURFACES WHICH MAY BE DISTURBED DURING THE INSTALLATION OF MECHANICAL, ELECTRICAL, PLUMBING OR OTHER OWNER WORK.

8. THE CONTRACTOR SHALL BE RESPONSIBLE FOR ALL CUTTING AND PATCHING REQUIRED FOR PROPER INSTALLATION OF MATERIAL AND EQUIPMENT. PROVIDE DEMOLITION AND PATCH/REPAIR IN ALL AREAS (WHETHER SPECIFICALLY SHOWN OR NOT) TO ACCOMMODATE ALL WORK.

9. IF THE CONTRACTOR ENCOUNTERS A CONDITION NOT COVERED IN THE CONSTRUCTION DOCUMENTS, THE CONTRACTOR SHALL NOTIFY AND RESOLVE THE ISSUE WITH THE PROJECT TEAM BEFORE COMMENCING ANY WORK.

10. DIMENSIONS ARE TO FACE OF FRAMING UNLESS OTHERWISE NOTED.

11. GENERAL CONTRACTOR SHALL BE SOLELY AND COMPLETELY RESPONSIBLE FOR JOB CONDITIONS OF THE JOB SITE, INCLUDING SAFETY OF PERSONS AND PROPERTY AND COMPLIANCE WITH OSHA SAFETY STANDARDS.

12. WHEN PORTIONS OF THE WORK ARE PERFORMED BY THE CONTRACTOR ON A DESIGN-BUILD BASIS, THE CONTRACTOR SHALL BE SOLELY RESPONSIBLE FOR THE DESIGN OF SUCH SYSTEMS AND FOR THE SECURING OF ALL ASSOCIATED PERMITS,. THE CONTRACTOR SHALL BE RESPONSIBLE FOR THE COORDINATION OF ALL DESIGN BUILD SUB CONTRACTORS .

13. CONTRACTOR SHALL AVOID INTERFERENCE AND CONFLICT WITH THE BUILDING'S NORMAL OPERATION. CONTRACTOR TO COMPLY WITH THE BUILDING RULES AND REGULATIONS REGARDING SCHEDULING AND USE OF ELEVATORS AND LOADING DOCKS FOR DELIVERY AND HANDLING OF MATERIALS, EQUIPMENT, AND DEBRIS.

ABBREVIATIONS

A.B.	ANCHOR BOLT	Ga.	GAUGE	PAF	POWDER ACTUATED FASTENER
A.C.	ASPHALT CONCRETE	GALV.	GALVANIZED	P/C	PRECAST (CONCRETE)
A.C.B.	ACOUSTICAL BOARD	GL	GRID LINE	PCF	POUNDS PER CUBIC FOOT
ACI	AMERICAN CONCRETE INSTITUTE	GLB	GLULAM BEAM	PL	PLATE
		G.B.	GRAB BAR	P.LAM.	PLASTIC LAMINATE
A.C.P.	ACOUSTICAL PANEL	GND.	GROUND	PLAS.	PLASTER
A.C.T.	ACOUSTICAL CEILING TILE	GYP.	GYPSUM	P.C.P.	PORTLAND CEMENT PLASTER
		G.W.B.	GYPSUM WALL BOARD		
ADD'L.	ADDITIONAL	H.B.	HOSE BIBB	PJP	PARTIAL JOINT PENETRATION
A.D.	AREA DRAIN	H.C.	HOLLOW CORE		
ADJ.	ADJUSTABLE	H.M.	HOLLOW METAL	PR.	PAIR
A.F.	ACCESS FLOORING	HORIZ.	HORIZONTAL	PSF	POUNDS PER FOOT
AGGR.	AGGREGATE	HSS	HOLLOW STRUCTURAL STEEL	PSI	POUNDS PER INCH
A.F.F.	ABOVE FINISHED FLOOR			P/T	POST-TENSIONED
AISC	AMERICAN INSTITUTE OF STEEL CONSTRUCTION	IBC	INTERNATIONAL BUILDING CODE	P.T.	PRESSURE TREATED
ARCH.	ARCHITECT	I.D.	INSIDE DIAMETER	PTN.	PARTITION
ASCE	AMERICAN SOCIETY OF CIVIL ENGINEERS	IN.	INCH	(R)	REMOVE
		INT.	INTERIOR	R., RAD.	RADIUS
ASTM	AMERICAN SOCIETY FOR TESTING AND MATERIALS	J.B.	JUNCTION BOX	R.C.P.	REFLECTED CEILING PLAN
		J.O.H.	JAMB OPENING HEIGHT		
AWS	AMERICAN WELDING SOCIETY	J.O.W.	JAMB WIDTH	R.D.	ROOF DRAIN
		JT.	JOINT	REF.	REFERENCE
BD.	BOARD	K	KIPS	REINF.	REINFORCING
BITUM.	BITUMINOUS	KSF	KIPS PER SQUARE FOOT	REQ'D.	REQUIRED
BKP.	BACKING PLATE	KSI	KIPS PER SQUARE INCH	RL	RELOCATE
BM.	BEAM	LAM.	LAMINATE	R.O.	ROUGH OPENING
BOT./B.O.	BOTTOM/BOTTOM OF	LB.	POUND	RWD.	REDWOOD
C.B.	CATCH BASIN	L.L.	LIVE LOAD	REV.	REVERSED
CEM.	CEMENT	LLH	LONG LEG HORIZONTAL	S.C.	SOLID CORE or SLIP CRITICAL
CER.	CERAMIC	LLV	LONG LEG VERTICAL		
C.G.	CORNER GUARD	LOC.	LOCATION	S.C.D.	SEE CIVIL DRAWINGS
C.I.	CAST IRON	LONG.	LONGITUDINAL	SCHED.	SCHEDULE
C.J.	CONTROL JOINT	L.P.	LOW POINT	SHR.	SHOWER
CJP	COMPLETE JOINT PENETRATION	LVF	LOW VELOCITY FASTENER	SIM.	SIMILAR
		MAX.	MAXIMUM	S.J.	SCORE JOINT
CL ℄	CENTERLINE	MBMA	METAL BUILDING MANUFACTURERS ASSOCIATION	S.L.D.	SEE LANDSCAPING DRAWINGS
CLG.	CEILING			SLRS	SEISMIC LOAD RESISTING SYSTEM
CLKG.	CAULKING				
CLO.	CLOSET	M.C.	MEDICINE CABINET	S.M.	SHEET METAL
CLR.	CLEAR	M.D.F.	MEDIUM DENSITY FIBERBOARD	S.M.D	SEE MECHANICAL DRAWINGS
CMU	CONCRETE MASONRY UNIT	M.D.O.	MEDIUM DENSITY OVERLAY		
C.O.	CASED OPENING			S.O.G.	SLAB ON GRADE
CONC.	CONCRETE	MECH.	MECHANICAL	SPEC.	SPECIFICATION
CONN.	CONNECTION	MEMB.	MEMBRANE	SQ.	SQUARE
CONST.	CONSTRUCTION	MFR.	MANUFACTURER	S.S.D.	SEE STRUCTURAL DRAWINGS
CORR.	CORRIDOR	MH.	MANHOLE		
CPT.	CARPET	MIN.	MINIMUM	S.S.	STAINLESS STEEL
CTSK.	COUNTERSUNK	MIR.	MIRROR	SSMA	STEEL STUD MANUFACTURERS ASSOCIATION
C.T.	CERAMIC TILE	MISC.	MISCELLANEOUS		
CTR.	CENTER	M.O.	MASONRY OPENING		
DBA	DEFORMED BAR ANCHOR	M.P.	MIDPOINT	STD.	STANDARD
		MPH	MILES PER HOUR	STRUCT.	STRUCTURAL
D.F.	DRINKING FOUNTAIN	M.S.	MACHINE SCREW	S.T.S.	SELF TAPPING SCREW
D.L.	DEAD LOAD	MT	MAGNETIC PARTICLE TESTING	SUSP.	SUSPENDED
DET.	DETAIL			SYM.	SYMMETRICAL
DIA., ∅	DIAMETER	MTD.	MOUNTED	THRU	THROUGH
DISP.	DISPENSER	MUL.	MULLION	TYP.	TYPICAL
DR.	DOOR	(N)	NEW	TRD.	TREAD
DWG.	DRAWING	N.I.C.	NOT IN CONTRACT	T.B.	TOWEL BAR
DWR.	DRAWER	NOM.	NOMINAL	T.C.	TOP OF CURB
D.S.	DOWNSPOUT	N.T.S.	NOT TO SCALE	T & G	TONGUE AND GROOVE
D.S.P.	DRY STANDPIPE	OBS.	OBSCURE	THK.	THICK
(E)	EXISTING	o.c.	ON CENTER	TJ	TRUSS JOIST
E.J.	EXPANSION JOINT	O.C.D.	OVERHEAD COILING DOOR	T.P.	TOP OF PAVEMENT
ELEC.	ELECTRICAL			TRANS.	TRANSVERSE
EL.	ELEVATION	O.C.G	OVERHEAD COILING GRILLE	T.W.	TOP OF WALL
EQ.	EQUAL			U.N.O.	UNLESS NOTED OTHERWISE
EXPO.	EXPOSED	O.D.	OUTSIDE DIAMETER		
EXP.	EXPANSION	O.F.C.I.	OWNER FURNISHED CONTRACTOR INSTALLED	U.T.	ULTRASONIC TESTING
EXT.	EXTERIOR			VERT.	VERTICAL
F.A.	FIRE ALARM			V.I.F.	VERIFY IN FIELD
FB.	FLAT BAR	O.F.D.	OVERFLOW DRAIN	V.T.R.	VENT THROUGH ROOF
F.D.	FLOOR DRAIN	O.F.O.I.	OWNER FURNISHED OWNER INSTALLED	w/	WITH
FDN.	FOUNDATION			w/o	WITHOUT
FE	FIRE EXTINGUISHER	OH.	OPPOSITE HAND	W.C.	WATER CLOSET
F.E.F.	FACE OF EXISTING FINISH	OPP.	OPPOSITE	WF	WIDE FLANGE
F.H.	FLAT HEAD	OWJ	OPEN WEB JOIST	W.O.	WINDOW OPENING
FIN.	FINISH			W.P.	WORK POINT
FLR.	FLOOR				
F.O.C	FACE OF CONCRETE				
F.O.F	FACE OF FINISH				
F.O.S.	FACE OF STUDS				
F.S.	FULL SIZE				
FT.	FOOT				
FTG.	FOOTING				
FUT.	FUTURE				

SYMBOLS LEGEND

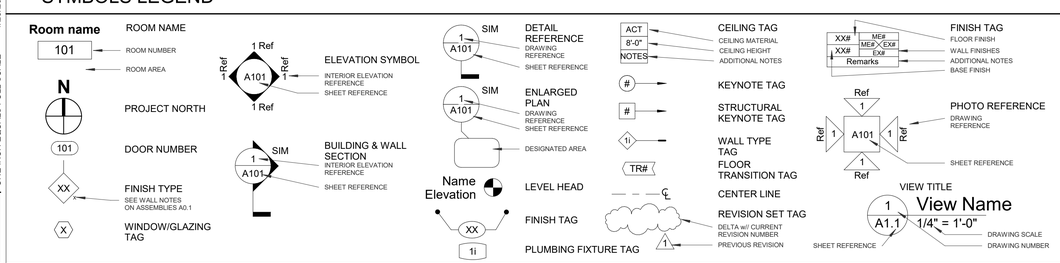

PROJECT INFORMATION

THE SCOPE OF THIS PROJECT IS THE SEISMIC REHABILITATION OF FIRE STATION 7 IN REEDSPORT, OR. THE RETROFIT WILL BE ACCOMPLISHED BY MEANS OF ADDING LATERAL FORCE RESISTING ELEMENTS WHERE NECESSARY, BY ENSURING A PROPER LOAD PATH TO THE FOUNDATION ELEMENTS. THE G.C. IS RESPONSIBLE FOR ALL ASPECTS OF CONSTRUCTION NECESSARY FOR THE COMPLETION OF ALL WORK INCIDENTAL TO THE WORK ILLUSTRATED IN THIS PLAN SET.

SEISMIC REHABILITATION SCOPE

THE SEISMIC REHABILITATION OF THIS BUILDING IS FUNDED BY A GRANT AWARDED TO REEDSPORT FIRE DISTRICT BY THE INFRASTRUCTURE FINANCE AUTHORITY OF OREGON BUSINESS DEVELOPMENT DEPARTMENT AS PART OF THEIR SEISMIC REHABILITATION OBJECTIVE OF IMMEDIATE OCCUPANCY FOR THE FIRE STATION AS OUTLINED IN THE AMERICAN SOCIETY OF ENGINEERS' 'SEISMIC REHABILITATION OF EXISTING BUILDINGS' (ASCE 41-17). THE REHABILITATION OBJECTIVE IS DEFINED AS:

"*STRUCTURAL PERFORMANCE LEVEL IMMEDIATE OCCUPANCY MEANS THE POST-EARTHQUAKE DAMAGE STATE IN WHICH ONLY VERY LIMITED STRUCTURAL DAMAGE HAS OCCURRED. THE BASIC VERTICAL- AND LATERAL-FORCE RESISTING SYSTEMS OF THE BUILDING RETAIN NEARLY ALL OF THEIR PRE-EARTHQUAKE STRENGTH AND STIFFNESS. THE RISK OF LIFE THREATENING INJURY AS A RESULT OF STRUCTURAL DAMAGE IS VERY LOW AND ALTHOUGH SOME MINOR STRUCTURAL REPAIRS MAY BE APPROPRIATE, THESE WOULD GENERALLY NOT BE REQUIRED PRIOR TO REOCCUPANCY.*"

THE G.C. IS RESPONSIBLE FOR ALL ASPECTS OF CONSTRUCTION NECESSARY FOR THE COMPLETION OF ALL WORK INCIDENTAL TO THE WORK ILLUSTRATED IN THIS PLAN SET.

PROJECT TEAM

OWNER:
CITY OF REEDSPORT
451 WINCHESTER AVE.
REEDSPORT, OR 97467

CIVIL:
ENGINEER OF RECORD: *SY ALLEN, PE*
ZCS ENGINEERING & ARCHITECTURE
524 MAIN ST.
OREGON CITY, OR 97045
T 503.659.2205

ARCHITECT:
ARCHITECT OF RECORD: *JACOB ZANDER, AIA*
CONTACT: *MATTHEW CRAWFORD*
ZCS ENGINEERING & ARCHITECTURE
524 MAIN ST.
OREGON CITY, OR 97045
T 503.659.2205

STRUCTURAL:
ENGINEER OF RECORD: *MATT SMITH, SE*
CONTACT: *KYLE MULLEN*
ZCS ENGINEERING & ARCHITECTURE
524 MAIN ST.
OREGON CITY, OR 97045
T 503.659.2205

MEP CONSULTANT:
CONTACT: *SHYLA KEAYS-GOODMAN*
KCL ENGINEERING
296 E. 5TH AVE., SUITE 501
EUGENE, OR 97401
T 503.212.4612

GENERAL CONTRACTOR:
SCOTT PARTNEY CONSTRUCTION
598 CHAPPEL PKWY.
NORTH BEND, OR 97459
T 541.756.7060

PERSPECTIVE

SITE PLAN (NTS)

PROJECT ADDRESS
124 N. 4TH ST.
REEDSPORT, OR 97467

HATCH INDICATES PROJECT SCOPE

SHEET INDEX

-GENERAL-
G0.0 COVER SHEET
G1.1 FIRST FLOOR CODE PLAN
G1.2 SECOND FLOOR CODE PLAN
G2.0 TYPICAL ADA STANDARDS

-DEMOLITION-
D1.1 DEMO FIRST FLOOR PLAN
D1.2 DEMO SECOND FLOOR PLAN
D1.3 DEMO ROOF PLAN
D2.1 FIRST FLOOR DEMO RCP
D2.2 SECOND FLOOR DEMO RCP
D6.0 DEMO EXTERIOR ELEVATIONS
D6.1 DEMO EXTERIOR ELEVATIONS

-CIVIL-
C0.00 CIVIL COVER SHEET
C0.10 EROSION AND SEDIMENT CONTROL NOTES
C0.20 LANDSCAPE NOTES
C1.00 EXISTING CONDITIONS, DEMOLITION, AND ESC PLAN
C2.00 CIVIL SITE PLAN
C3.00 OVERALL GRADING SITE PLAN
C4.00 PRIVATE CIVIL DETAILS
C5.00 AGENCY STANDARD DETAILS
C5.10 AGENCY STANDARD DETAILS

-ARCHITECTURAL-
A0.1 ASSEMBLIES
A0.2 DOOR & WINDOW SCHEDULES
A0.3 ALTERNATE DOOR HARDWARE SCHEDULE
A0.4 FINISHES & ACCESSORIES
A1.1 FIRST FLOOR PLAN
A1.2 SECOND FLOOR PLAN
A1.3 ROOF PLAN
A2.1 FIRST FLOOR RCP
A2.2 SECOND FLOOR RCP
A3.1 FIRST FLOOR FINISH PLAN
A3.2 SECOND FLOOR FINISH PLAN
A4.0 ENLARGED PLANS & RESTROOM ACCESSORIES
A4.1 STAIR & RAMP PLANS & SECTIONS
A5.0 INTERIOR ELEVATIONS
A6.0 EXTERIOR ELEVATIONS
A6.1 EXTERIOR ELEVATIONS
A7.0 BUILDING SECTIONS
A8.0 WALL SECTIONS

SHEET INDEX cont.

-ARCHITECTURAL cont.-
A9.0 PENETRATION FLASHING DETAILS
A9.1 EXTERIOR DETAILS
A9.2 EXTERIOR DETAILS
A9.3 EXTERIOR DETAILS
A9.4 EXTERIOR DETAILS
A9.5 INTERIOR DETAILS
A9.6 INTERIOR DETAILS
AS.1 SPECIFICATIONS
AS.2 SPECIFICATIONS
AS.3 SPECIFICATIONS
AS.4 SPECIFICATIONS
AS.5 SPECIFICATIONS

-STRUCTURAL-
S0.1 STRUCTURAL GENERAL NOTES
S1.1 FOUNDATION PLAN
S1.2 PILE LAYOUT PLAN
S2.1 FLOOR FRAMING PLAN
S2.2 ROOF FRAMING PLAN
S3.1 EXTERIOR STAIR PLAN, ELEVATION & DETAILS
S4.1 FOUNDATION DETAILS
S4.2 FOUNDATION DETAILS
S4.3 FOUNDATION DETAILS
S5.1 FLOOR FRAMING DETAILS
S5.2 FLOOR FRAMING DETAILS
S6.1 ROOF FRAMING DETAILS
S6.2 ROOF FRAMING DETAILS

-MECHANICAL-
M1.3 MECHANICAL HVAC PLAN - ROOF
M4.2 MECHANICAL SCHEDULES
M0.1 MECHANICAL GENERAL NOTES & SYMBOLS
MD1.1 MECHANICAL DEMOLITION - FIRST FLOOR
MD1.2 MECHANICAL DEMOLITION - SECOND FLOOR
M1.1 MECHANICAL HVAC PLAN - FIRST FLOOR
M1.2 MECHANICAL HVAC PLAN - SECOND FLOOR
M3.1 MECHANICAL CONTROLS
M4.1 MECHANICAL SCHEDULES
M2.1 MECHANICAL DETAILS

-PLUMBING-
P1.0 PLUMBING PLAN - FOUNDATION
PD1.1 PLUMBING DEMOLITION
PD1.2 PLUMBING DEMOLITION - SECOND FLOOR
P1.1 PLUMBING PLAN - FIRST FLOOR
P1.2 PLUMBING PLAN - SECOND FLOOR
P3.1 PLUMBING SCHEDULES
P2.1 PLUMBING DETAILS

-ELECTRICAL-
E0.1 ELECTRICAL GENERAL NOTES & SYMBOLS
ED1.1 DEMO FIRST FLOOR PLAN - ELECTRICAL
ED1.2 DEMO SECOND FLOOR PLAN - ELECTRICAL
E1.1 FIRST FLOOR PLAN - POWER
E1.2 SECOND FLOOR PLAN - POWER
E2.1 FIRST FLOOR PLAN - LIGHTING
E2.2 SECOND FLOOR PLAN - LIGHTING
E3.1 ELECTRICAL ONE-LINE DIAGRAM
E4.1 ELECTRICAL SCHEDULES
E1.3 ROOF - ELECTRICAL

-TECHNOLOGY-
T0.2 SITE PLAN - SYSTEMS
T1.6 ENLARGED PLAN - NEW SERVER ROOM
T3.1 SYSTEMS RISER DIAGRAMS
T3.2 SYSTEMS RISER DIAGRAMS
T3.3 SYSTEMS DETAILS
T0.1 TECHNOLOGY GENERAL NOTES & SYMBOLS
TD1.1 FIRST FLOOR DEMO PLAN - SYSTEMS
TD1.2 SECOND FLOOR DEMO PLAN - SYSTEMS
T1.1 FIRST FLOOR PLAN - SYSTEMS
TD1.3 ROOF DEMO PLAN - SYSTEMS
T1.2 SECOND FLOOR PLAN - SYSTEMS
T1.3 ENLARGED PLAN - EXISTING SERVER ROOM
T1.4 ENLARGED PLAN - EXISTING DISPATCH OFFICE
T1.5 ENLARGED PLAN - EXISTING POLICE CONFERENCE ROOM

ALTERNATES

ALTERNATE 1: COMPOSITE WOOD AND STEEL FRAMED FENCE.

ALTERNATE 2: CEDAR FENCE WITH WOOD POSTS IN SIMILAR CONFIGURATION AS ALTERNATE 1. PROVIDE BID FOR 48 LINEAR FEET OF FENCING, 6' TALL. FENCE TO CONSIST OF 4x4x8 P.T. POSTS @ 6' O.C. MAX AND HORIZONTAL 1x6 CEDAR BOARDS. PROVIDE (1) 3'-0" WIDE GATE WITH ADJUSTABLE STEEL GATE FRAME AND SURFACE MOUNT MORTISE CYLINDER GATE LOCK, BOD: LOCINOX SUFACE MOUNTED 'US' MORTISE CYLINDER GATE LOCK #LUKYJ5 W/ LOCINOX SH-KLQF SECURITY GATE STOPS AND KEEPERS #SH-KLQF.

ALTERNATE 3: DEDUCTIVE ALTERNATE FOR REMOVING ELECTRIFIED DOOR HARDWARE. PROVIDE DEDUCTIVE COST FOR PRICE DIFFERENCE BETWEEN BASE BID DOOR HARDWARE GROUPS AND ALTERNATE DOOR HARDWARE GROUPS.

REGISTERED ARCHITECT
Jacob Zander
OREGON CITY, OR
12412
STATE OF OREGON

△	DATE:	Description
2	Date 2	REV 2

PROJECT NO.	G-1468-21
DRAWN:	MJC,PWR,TBS
CHECKED:	JEZ
DATE:	01-24-23

COVER SHEET

G0.0

95% CONSTRUCTION DOCUMENTS | BID / PERMIT SET

ONE INCH EQUALS FULL SCALE

4/25/2023 2:13:45 PM

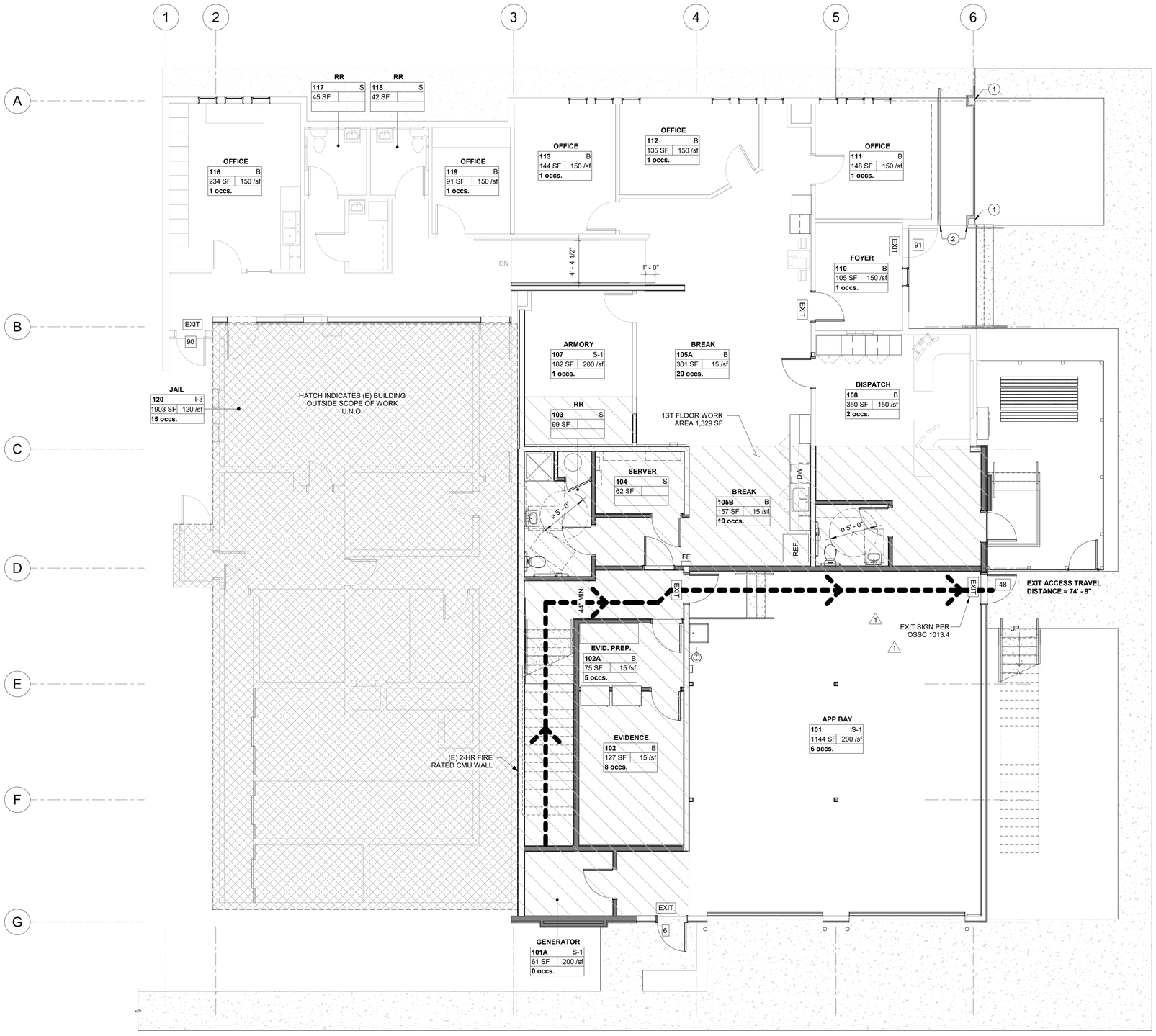

1 G1.1 FIRST FLOOR CODE PLAN
3/16" = 1'-0"

ONE INCH EQUALS FULL SCALE 4/25/2023 2:13:48 PM

CODE PLAN KEYNOTES

1. PER ICC A117-2009 403.5(E), '*THE CLEAR WIDTH IOF AN ACCESSIBLE ROUTE] SHALL BE PERMITTED TO BE REDUCED TO 32 INCHES MINIMUM FOR A LENGTH OF 24 INCHES MAXIMUM PROVIDED THE REDUCED WIDTH SEGMENTS ARE SEPARATED BY SEGMENTS THAT ARE 48 INCHES MINIMUM IN LENGTH AND 36 INCHES MINIMUM IN WIDTH*.' DUE TO THE STRUCTURAL POSTS, THE CLEAR WIDTH OF THE RAMP IS REDUCED TO 32-1/2" IN TWO INSTANCES OF 14" IN LENGTH, SEPARATED BY A DISTANCE OF 11' 3-3/4"; THE REMAINDER OF THE RAMP IS 41" CLEAR IN WIDTH .
2. PER ICC A117-2009 505.10(3), *FULL EXTENSIONS OF HANDRAILS SHALL NOT BE REQUIRED WHERE SUCH EXTENSIONS WOULD BE HAZARDOUS DUE TO PLAN CONFIGURATION.* IN THIS INSTANCE THE EXTENSION AT THE TOP OF THE LANDING CANNOT BE ADDED DUE TO THE EXISTING ENTRANCE DOOR.

WALL LEGEND

- (E) WALL
- (N) WALL IN SAME LOCATION AS (E) WALL
- (N) WALL / SPACE RECONFIGURATION

FIRE LIFE SAFETY LEGEND

- EXIT — ILLUMINATED EXIT SIGN PER 2014 OREGON FIRE CODE (OFC)
- EXIT — COMBO LED EMERGENCY EXIT SIGN, W/ BATTERY BACKUP
- EMERGENCY EXIT ROUTE
- # — OCCUPANT LOAD PER EXIT
- Room name: 101 OccType; 150 sf OLF /sf; # occs. # Exit(s) — ROOM OCCUPANT LOAD
- FE — FIRE EXTINGUISHER
- EM — OUTDOOR 2-WAY COMMUNICATION SYSTEM

LOT INFORMATION

ADDRESS	124 N. 4TH ST. REEDSPORT, OR 97467
MAP NUMBER	2112W35CA
TAX LOT ID	11500

APPLICABLE CODES

BUILDING CODE	2019 OSSC
PLUMBING CODE	2021 OPSC
MECHANICAL CODE	2021 OMSC
ELECTRICAL CODE	2021 OESC
ENERGY CODE	2021 OEESC
ACCESSIBILITY	2021 ICC A117.1
FIRE CODE	2021 OFC

GENERAL BUILDING INFORMATION

CONSTRUCTION TYPE: VB
NON-SEPARATED MIXED OCCUPANCY: B, A-3, S-1, I-3
FIRE SPRINKLER - NO
FIRE ALARM - NO
BUILDING HEIGHT: 27" - 4"
BUILDING AREA TOTALS

1ST FLOOR:	7,013 SF (UNCHANGED)
2ND FLOOR:	2,486 SF (UNCHANGED)
TOTAL:	9,499 SF (UNCHANGED)

OCCUPANCY TOTALS

STORY	AREA	OCCUPANTS
1ST FLOOR	7,013 SF	43 (UNCHANGED)
2ND FLOOR	2,486 SF	98 (UNCHANGED)

APPLICABLE CODES

BUILDING CODE	2019 OSSC
PLUMBING CODE	2021 OPSC
MECHANICAL CODE	2021 OMSC
ELECTRICAL CODE	2021 OESC
ENERGY SPECIALITY CODE	2021 OEESC
ACCESSIBILITY	2021 ICC A117.1
FIRE CODE	2021 OFC
ACCESSIBILITY CODE	2009 ICC A117.1

EXISTING BUILDINGS (CH. 34 OSSC & 2018 IEBC):
THIS PROJECT WAS ANALYZED USING THE "WORK AREA COMPLIANCE METHOD." (IEBC 301.3.2)

LEVEL 2 ALTERATION: RECONFIGURATION OF SPACES LESS THAN 50% OF THE FLOOR AREA (IEBC SECTION 603)

SECTION 305 ACCESSIBILITY FOR EXISTING BUILDINGS: 305.3 EXTENT OF APPLICATION: ALTERATIONS SHALL NOT REDUCE OR HAVE THE EFFECT OF REDUCING ACCESSIBILITY OF A FACILITY OR PORTION OF A FACILITY.

305.6 ALTERATIONS, EXCEPTION 2: ACCESSIBLE MEANS OF EGRESS REQUIRED BY CHAPTER 10 OF THE INTERNATIONAL BUILDING CODE ARE NOT REQUIRED TO BE PROVIDED IN EXISTING FACILITIES.

801.3 COMPLIANCE: NEW CONSTRUCTION ELEMENTS, COMPONENTS, SYSTEMS, AND SPACES SHALL COMPLY WITH THE BUILDING CODE

NUMBER OF EXITS

FIRST STORY: (2) EXITS PROVIDED. PER OSSC 1006.3.3 (2) EXITS ARE REQUIRED WHEN VALUES IN TABLE 1006.3.3(1) OR 1006.3.3(2) ARE EXCEEDED.
- (1) EXITS REQ'D, (2) EXITS PROVIDED

SECOND STORY: (2) EXITS PROVIDED. PER TABLE 1006.3.3 TWO EXITS ARE REQ'D WHEN OCCUPANT LOAD >29 ON A 2ND STORY
- (2) EXITS REQ'D, (2) EXITS PROVIDED

1006.2 EGRESS FROM SPACES. 'A' OCCUPANCY SPACES OVER 49 OCC. ARE REQ'D TO HAVE (2) EXITS PER TABLE 1006.2.1. TWO EXITS PROVIDED FROM 2ND FLOOR CONFRERENCE ROOM.

EGRESS REQUIREMENTS

STAIRWAY - SECTION 1009.2.3: ACCESSIBLE STAIRWAYS SHALL NOT BE LESS THAN 48" WIDE BETWEEN HANDRAILS

CORRIDORS - TABLE 1020.2: CORRIDORS SHALL BE 44" WIDE WHEN SERVING AN OCCUPANT LOAD OF 50 OR MORE. PROVIDE 1-HR FIRE BARRIER PER T 1020.2 WHEN SERVING AN OCCUPANT LOAD GREATER THAN 30.

EGRESS DISTANCE:
EXIT ACCESS TRAVEL DISTANCE - EATD (1017.2):

A	MAX 250 FT
B	MAX 200 FT
S-1	MAX 200 FT

ACTUAL EATD = 74'-9" > 200', OK

COMMON PATH OF EGRESS TRAVEL FOR (1) EXIT - CPET (1006.2.1):

A	75 FT
B	100 FT
S-1	100 FT

ACTUAL CPET < 75, OK

EXIT ACCESS STAIRWAYS AND RAMPS:

1019.3 OCCUPANCIES OTHER THAN GROUP 1-1 AND 1-3: EXIT ACCESS STAIRWAYS THAT SERVE ONLY TWO STORIES ARE NOT REQUIRED TO BE ENCLOSED WITH A SHAFT ENCLOSURE

FIRE RESISTANCE REQUIREMENTS

PRIMARY STRUCTURAL FRAME	0HR
BEARING WALLS, EXTERIOR*	0HR
BEARING WALLS, INTERIOR	0HR
FLOOR CONSTRUCTION	0HR
ROOF CONSTRUCTION	0HR

ENERGY CODE REQUIREMENTS:

CLIMATE ZONE 4 - NON RESIDENTIAL
ROOF: CONTINUOUS R-30
WALL: WOOD FRAMED R-20
SLAB ON GRADE: R-15 (24" AT PERIMETER)
DOORS: U-0.370
FENESTRATION: FIXED: U 0.36 MAX, SHGC 0.36 MAX
OPERABLE : U .45 MAX, SHGC 0.33 MAX

ZCS ENGINEERING ARCHITECTURE
127 NW D Street, Grants Pass, Oregon 97526 | 541-479-3865

REEDSPORT FIRE DISTRICT
124 N 4TH ST.
REEDSPORT, OR 97467

REEDSPORT FIRE STATION 7

REEDSPORT FIRE DEPT. VOLUNTEER

REGISTERED ARCHITECT Jacob Zander OREGON CITY, OR 12412 STATE OF OREGON

△	DATE:	Description
1	03-07-23	REV 1

PROJECT NO.	G-1468-21
DRAWN:	MJC,PWR,TBS
CHECKED:	JEZ
DATE:	01-24-23

FIRST FLOOR CODE PLAN

G1.1

95% CONSTRUCTION DOCUMENTS | BID / PERMIT SET

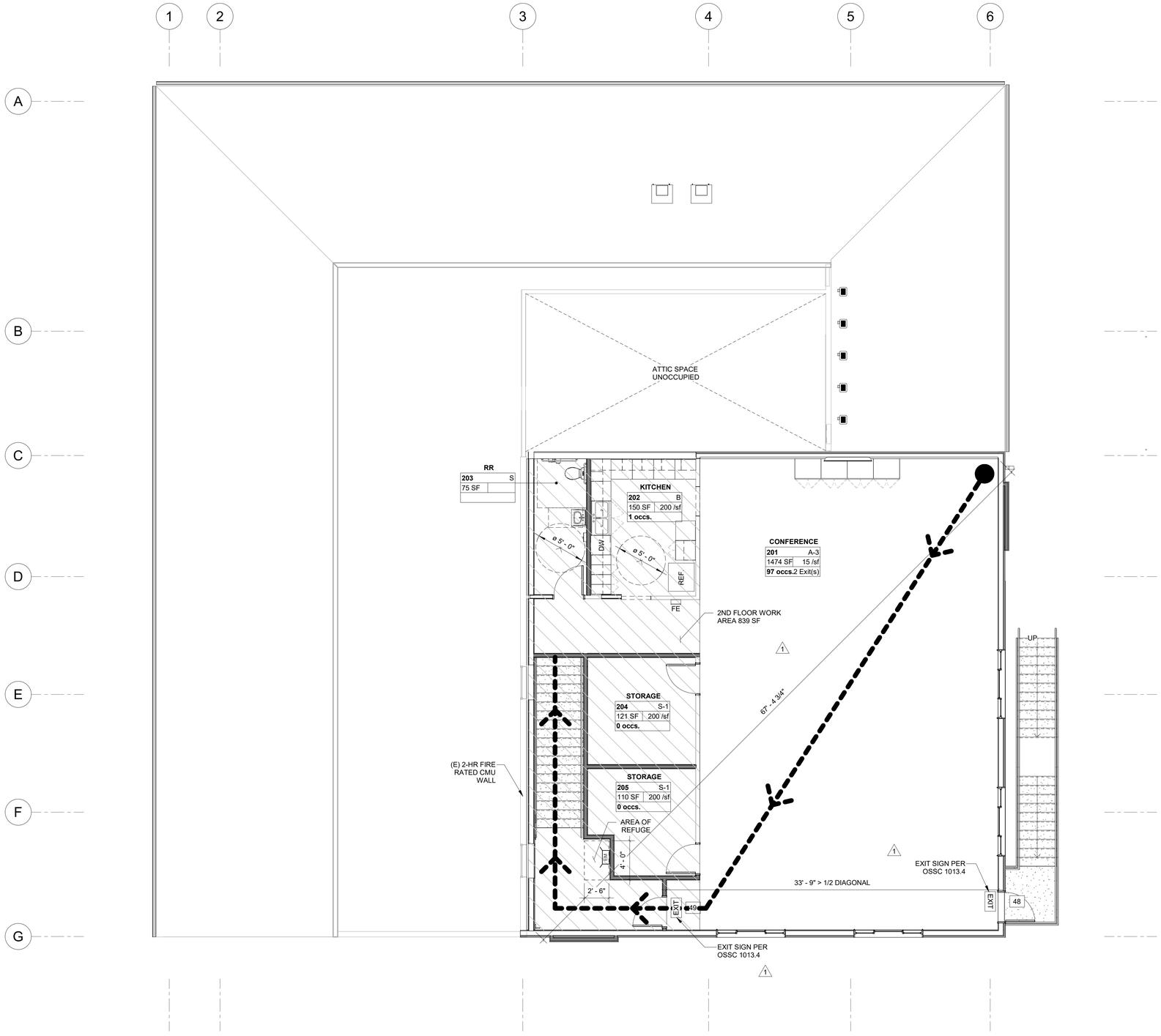

1 G1.2 SECOND FLOOR CODE PLAN
3/16" = 1'-0"

CODE PLAN KEYNOTES

1. PER ICC A117-2009 403.5(E), '*THE CLEAR WIDTH [OF AN ACCESSIBLE ROUTE] SHALL BE PERMITTED TO BE REDUCED TO 32 INCHES MINIMUM FOR A LENGTH OF 24 INCHES MAXIMUM PROVIDED THE REDUCED WIDTH SEGMENTS ARE SEPARATED BY SEGMENTS THAT ARE 48 INCHES MINIMUM IN LENGTH AND 36 INCHES MINIMUM IN WIDTH.*' DUE TO THE STRUCTURAL POSTS, THE CLEAR WIDTH OF THE RAMP IS REDUCED TO 32-1/2" IN TWO INSTANCES OF 14" IN LENGTH, SEPARATED BY A DISTANCE OF 11' 3-3/4"; THE REMAINDER OF THE RAMP IS 41" CLEAR IN WIDTH .

2. PER ICC A117-2009 505.10(3), *FULL EXTENSIONS OF HANDRAILS SHALL NOT BE REQUIRED WHERE SUCH EXTENSIONS WOULD BE HAZARDOUS DUE TO PLAN CONFIGURATION.* IN THIS INSTANCE THE EXTENSION AT THE TOP OF THE LANDING CANNOT BE ADDED DUE TO THE EXISTING ENTRANCE DOOR.

WALL LEGEND

(E) WALL

(N) WALL IN SAME LOCATION AS (E) WALL

(N) WALL / SPACE RECONFIGURATION

FIRE LIFE SAFETY LEGEND

EXIT — ILLUMINATED EXIT SIGN PER 2014 OREGON FIRE CODE (OFC)

EXIT — COMBO LED EMERGENCY EXIT SIGN, W/ BATTERY BACKUP

EMERGENCY EXIT ROUTE

— OCCUPANT LOAD PER EXIT

Room name	
101	OccType
150 sf	OLF /sf
# occs.	# Exit(s)

ROOM OCCUPANT LOAD

FE — FIRE EXTINGUISHER

EM — OUTDOOR 2-WAY COMMUNICATION SYSTEM

LOT INFORMATION

ADDRESS	124 N. 4TH ST. REEDSPORT, OR 97467
MAP NUMBER	2112W35CA
TAX LOT ID	11500

APPLICABLE CODES

BUILDING CODE	2019 OSSC
PLUMBING CODE	2021 OPSC
MECHANICAL CODE	2021 OMSC
ELECTRICAL CODE	2021 OESC
ENERGY CODE	2021 OEESC
ACCESSIBILITY	2021 ICC A117.1
FIRE CODE	2021 OFC

GENERAL BUILDING INFORMATION

CONSTRUCTION TYPE: VB
NON-SEPARATED MIXED OCCUPANCY: B, A-3, S-1, I-3
FIRE SPRINKLER - NO
FIRE ALARM - NO
BUILDING HEIGHT: 27' - 4"
BUILDING AREA TOTALS

1ST FLOOR:	7,013 SF (UNCHANGED)
2ND FLOOR:	2,486 SF (UNCHANGED)
TOTAL:	9,499 SF (UNCHANGED)

OCCUPANCY TOTALS

STORY	AREA	OCCUPANTS
1ST FLOOR	7,013 SF	43 (UNCHANGED)
2ND FLOOR	2,486 SF	98 (UNCHANGED)

APPLICABLE CODES

BUILDING CODE	2019 OSSC
PLUMBING CODE	2021 OPSC
MECHANICAL CODE	2021 OMSC
ELECTRICAL CODE	2021 OESC
ENERGY SPECIALITY CODE	2021 OEESC
ACCESSIBILITY	2021 ICC A117.1
FIRE CODE	2021 OFC
ACCESSIBILITY CODE	2009 ICC A117.1

EXISTING BUILDINGS (CH. 34 OSSC & 2018 IEBC):
THIS PROJECT WAS ANALYZED USING THE "WORK AREA COMPLIANCE METHOD." (IEBC 301.3.2)

LEVEL 2 ALTERATION: RECONFIGURATION OF SPACES LESS THAN 50% OF THE FLOOR AREA (IEBC SECTION 603)

SECTION 305 ACCESSIBILITY FOR EXISTING BUILDINGS: 305.3 EXTENT OF APPLICATION: ALTERATIONS SHALL NOT REDUCE OR HAVE THE EFFECT OF REDUCING ACCESSIBILITY OF A FACILITY OR PORTION OF A FACILITY.

305.6 ALTERATIONS, EXCEPTION 2: ACCESSIBLE MEANS OF EGRESS REQUIRED BY CHAPTER 10 OF THE INTERNATIONAL BUILDING CODE ARE NOT REQUIRED TO BE PROVIDED IN EXISTING FACILITIES.

801.3 COMPLIANCE: NEW CONSTRUCTION ELEMENTS, COMPONENTS, SYSTEMS, AND SPACES SHALL COMPLY WITH THE BUILDING CODE

NUMBER OF EXITS

FIRST STORY: (2) EXITS PROVIDED. PER OSSC 1006.3.3 (2) EXITS ARE REQUIRED WHEN VALUES IN TABLE 1006.3.3(1) OR 1006.3.3(2) ARE EXCEEDED.
- (1) EXITS REQ'D, (2) EXITS PROVIDED

SECOND STORY: (2) EXITS PROVIDED. PER TABLE 1006.3.3 TWO EXITS ARE REQ'D WHEN OCCUPANT LOAD >29 ON A 2ND STORY
- (2) EXITS REQ'D, (2) EXITS PROVIDED

1006.2 EGRESS FROM SPACES. 'A' OCCUPANCY SPACES OVER 49 OCC. ARE REQ'D TO HAVE (2) EXITS PER TABLE 1006.2.1. TWO EXITS PROVIDED FROM 2ND FLOOR CONFRERENCE ROOM.

EGRESS REQUIREMENTS

STAIRWAY - SECTION 1009.2.3: ACCESSIBLE STAIRWAYS SHALL NOT BE LESS THAN 48" WIDE BETWEEN HANDRAILS

CORRIDORS - TABLE 1020.2: CORRIDORS SHALL BE 44" WIDE WHEN SERVING AN OCCUPANT LOAD OF 50 OR MORE. PROVIDE 1-HR FIRE BARRIER PER T 1020.2 WHEN SERVING AN OCCUPANT LOAD GREATER THAN 30.

EGRESS DISTANCE:
EXIT ACCESS TRAVEL DISTANCE - EATD (1017.2):

A	MAX 250 FT
B	MAX 200 FT
S-1	MAX 200 FT

ACTUAL EATD = 74'-9" > 200', OK

COMMON PATH OF EGRESS TRAVEL FOR (1) EXIT - CPET (1006.2.1):

A	75 FT
B	100 FT
S-1	100 FT

ACTUAL CPET < 75, OK

EXIT ACCESS STAIRWAYS AND RAMPS:

1019.3 OCCUPANCIES OTHER THAN GROUP 1-1 AND 1-3: EXIT ACCESS STAIRWAYS THAT SERVE ONLY TWO STORIES ARE NOT REQUIRED TO BE ENCLOSED WITH A SHAFT ENCLOSURE

FIRE RESISTANCE REQUIREMENTS

PRIMARY STRUCTURAL FRAME	0HR
BEARING WALLS, EXTERIOR*	0HR
BEARING WALLS, INTERIOR	0HR
FLOOR CONSTRUCTION	0HR
ROOF CONSTRUCTION	0HR

ENERGY CODE REQUIREMENTS:

CLIMATE ZONE 4 - NON RESIDENTIAL
ROOF: CONTINUOUS R-30
WALL: WOOD FRAMED R-20
SLAB ON GRADE: R-15 (24" AT PERIMETER)
DOORS: U-0.370
FENESTRATION: FIXED: U 0.36 MAX, SHGC 0.36 MAX
OPERABLE : U .45 MAX, SHGC 0.33 MAX

ZCS ENGINEERING ARCHITECTURE
127 NW D Street, Grants Pass, Oregon 97526 | 541-479-3865

REEDSPORT FIRE DISTRICT
124 N 4TH ST.
REEDSPORT, OR 97467

REEDSPORT FIRE STATION 7

REGISTERED ARCHITECT Jacob Zander OREGON CITY, OR 12412 STATE OF OREGON

△	DATE:	Description
1	03-07-23	REV 1

PROJECT NO.	G-1468-21
DRAWN:	MJC,PWR,TBS
CHECKED:	JEZ
DATE:	01-24-23

SECOND FLOOR CODE PLAN

G1.2

95% CONSTRUCTION DOCUMENTS | BID / PERMIT SET

ONE INCH EQUALS FULL SCALE 4/25/2023 2:13:49 PM

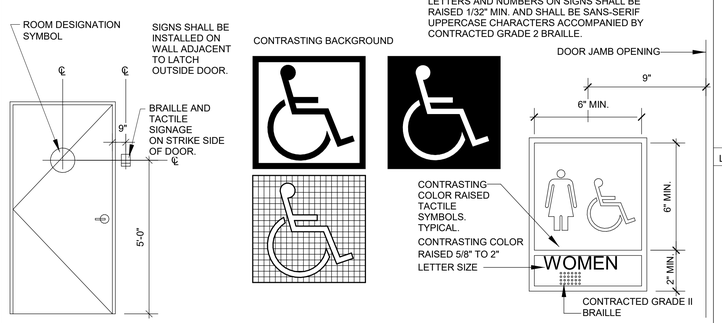

TOILET ROOM SIGN LOCATION | PROPORTIONS | DOOR JAMB MOUNTED BRAILLE SIGNAGE

SIGNAGE, IDENTIFICATION & INTERNATIONAL SYMBOLS OF ACCESSIBILITY-

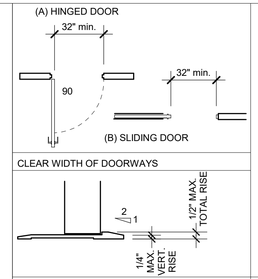

DOOR THRESHOLD

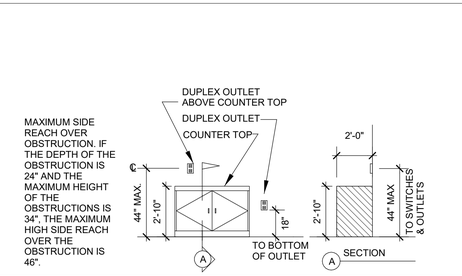

OUTLET HEIGHTS

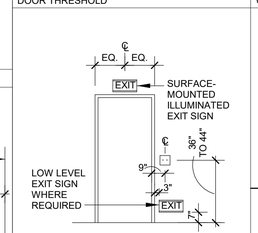

LIGHT SWITCHES & EXIT SIGNS

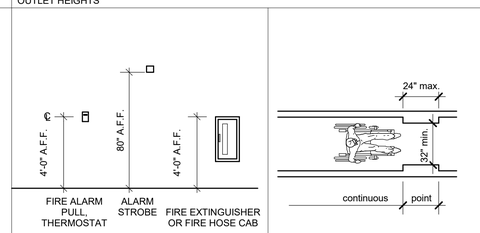

FIRE APPLIANCES

MIN. CLEAR WIDTH FOR SINGLE WHEELCHAIR - FIG. 11B-10

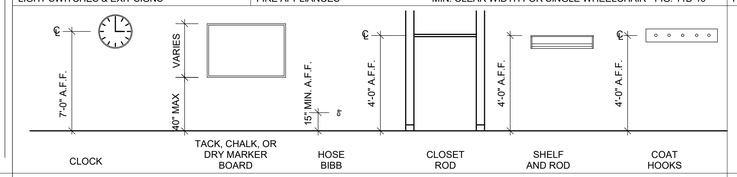

MISCELLANEOUS MOUNTING HEIGHTS

MOUNTING HEIGHTS

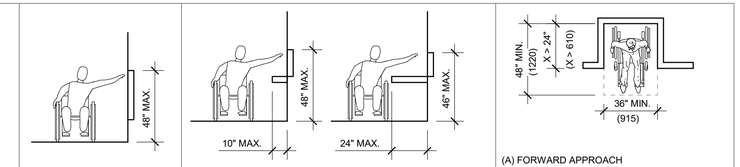

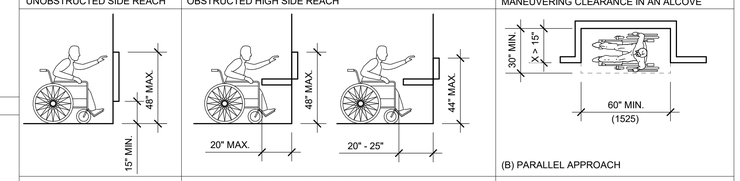

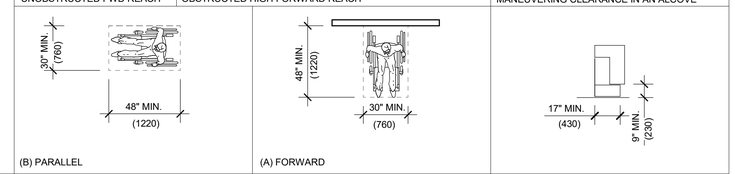

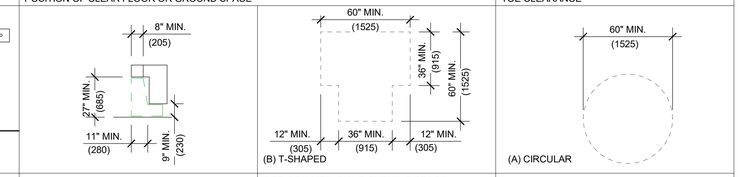

CLEAR FLOOR SPACE

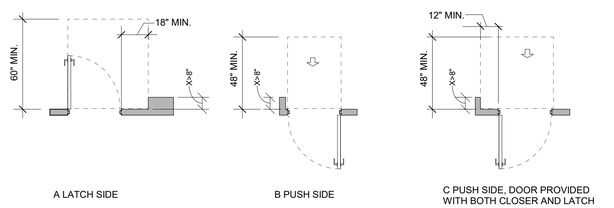

MANEUVERING CLEARANCES AT RECESSED DOORS

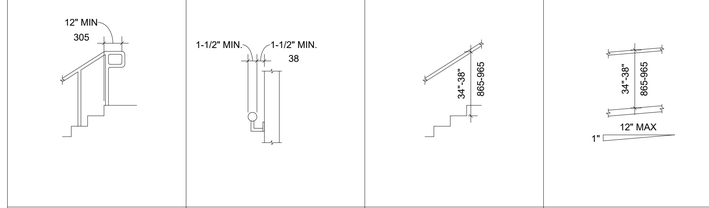

HANDRAILS, STAIR AND RAMPS

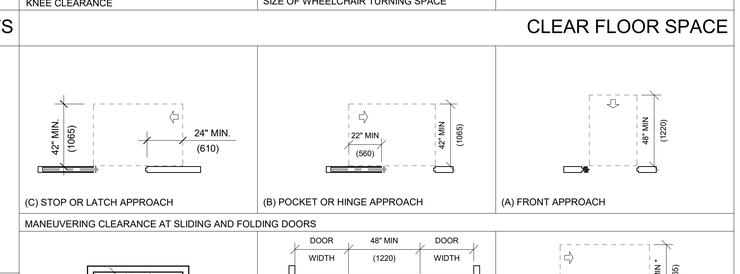

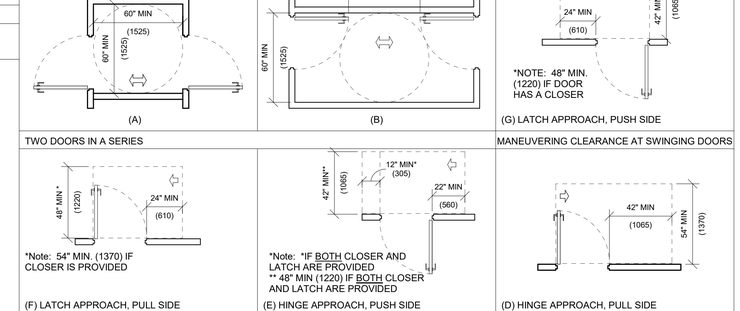

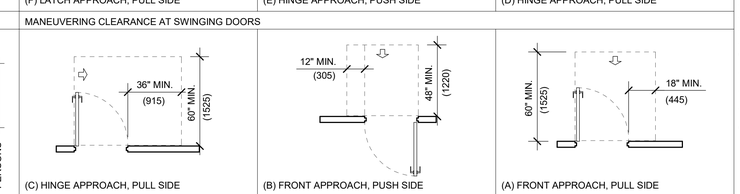

DOORS AND DOORWAYS

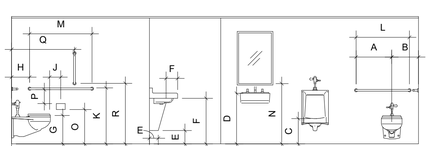

FIXTURES	DIM#	MOUNTING HEIGHT
GRAB BAR	A	24"MIN TO CENTER OF TOILET
TOILET (ADA)	B	16"-18" TO CENTER FROM ADJACENT WALL
URINAL	C	24" TO RIM ABOVE FINISH FLOOR
URINAL (ADA)	C	17" TO RIM ABOVE FINISH FLOOR
SINK (ADA)	D	34" MAX TO SINK RIM ABOVE FINISH FLOOR
SINK (ADA)	E	9" HIGH X 6" DEEP TOE CLEARANCE
SINK (ADA)	F	27" MIN X 8" DEEP KNEE CLEARANCE
TOILET	G	14" TO TOP OF SEAT
TOILET (ADA)	G	17" - 19" TOP OF SEAT
GRAB BAR (ADA)	H	12" TO CENTER FROM ADJACENT WALL
TOILET PAPER HOLDER	J	7" - 9" TO CENTERLINE FROM TOILET
GRAB BAR	K	33" - 36" TO TOP A.F.F.
GRAB BAR	L	36" OUTSIDE TO OUTSIDE
GRAB BAR	M	42" OUTSIDE TO OUTSIDE
MIRROR	N	40" MAX TO BOTTOM OF MIRROR SURFACE
TOILET PAPER HOLDER	O	19" MIN. TO CENTER ABOVE FINISH FLOOR
TOILET PAPER HOLDER	P	1-1/2" MIN. FROM BOTTOM OF GRAB BAR
18" VERTICAL GRAB BAR	Q	39" - 41" FROM WALL
18" VERTICAL GRAB BAR	R	39" - 41" FROM FLOOR

TYPICAL MOUNTING REQUIREMENTS

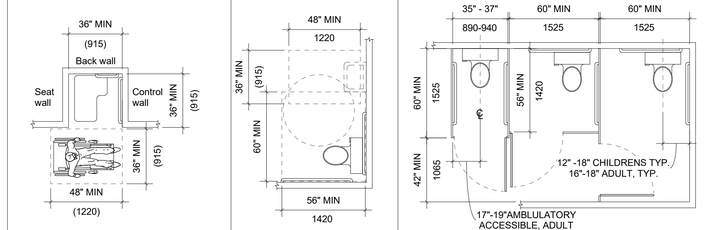

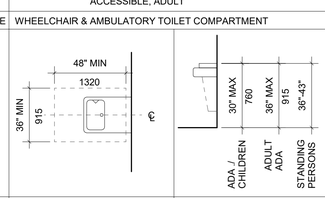

PLUMBING ELEMENTS

ZCS ENGINEERING ARCHITECTURE
127 NW D Street, Grants Pass, Oregon 97526 | 541-479-3865

REEDSPORT FIRE DISTRICT
124 N 4TH ST.
REEDSPORT, OR 97467

REEDSPORT FIRE STATION 7

REEDSPORT FIRE DEPT. VOLUNTEER

REGISTERED ARCHITECT Jacob Zander OREGON CITY, OR 12412 STATE OF OREGON

△	DATE:	Description

PROJECT NO.	G-1468-21
DRAWN:	MJC,PWR,TBS
CHECKED:	JEZ
DATE:	01-24-23

TYPICAL ADA STANDARDS

G2.0

95% CONSTRUCTION DOCUMENTS | BID / PERMIT SET

ONE INCH EQUALS FULL SCALE 4/25/2023 2:13:51 PM

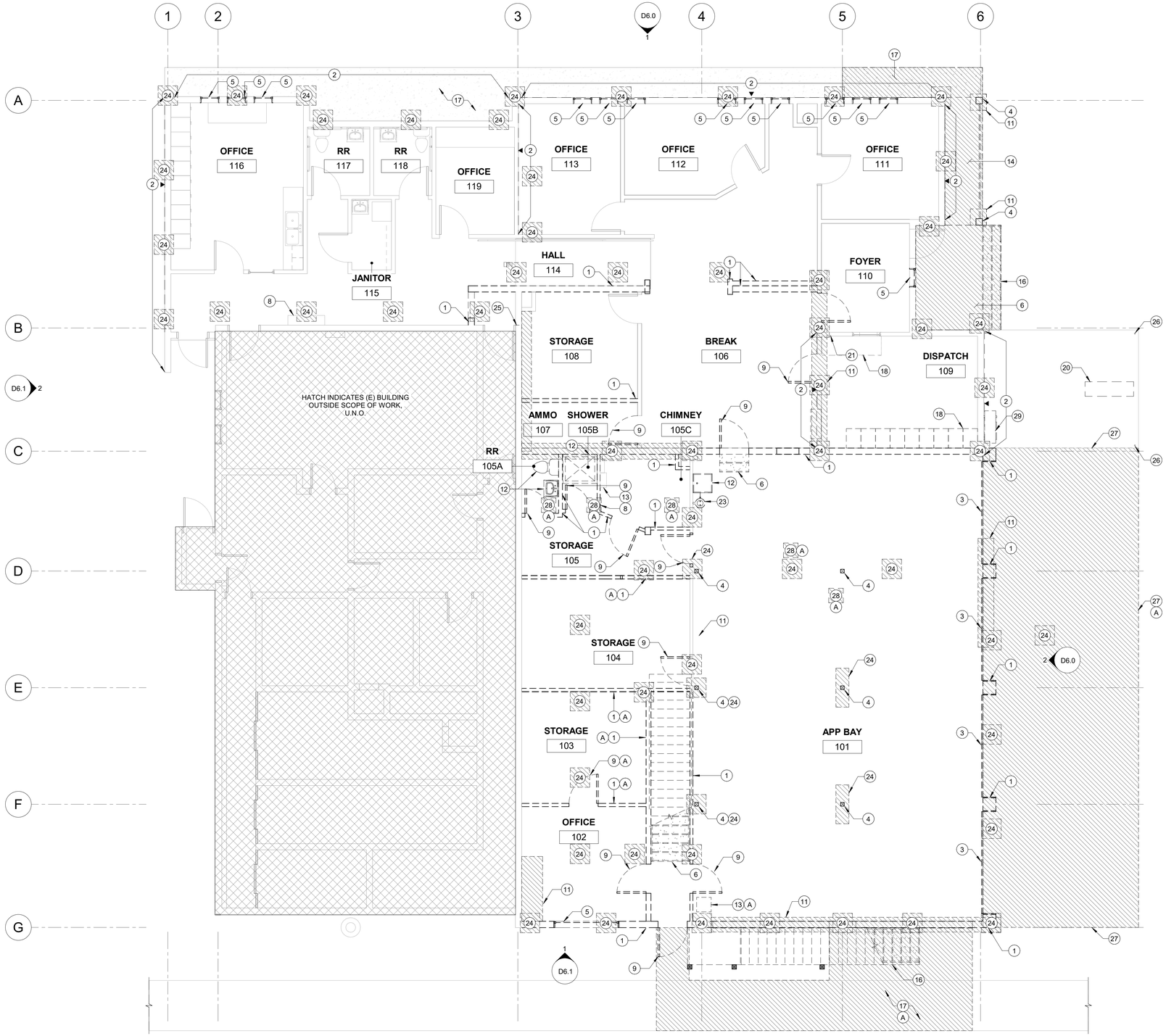

1 D1.1 DEMO FIRST FLOOR PLAN
3/16" = 1'-0"

DEMO PLAN GENERAL NOTES

A. CONTRACTORS SHALL BE RESPONSIBLE FOR DISPOSAL OF ALL DEBRIS. PATCH AND REPAIR OF INTERIOR SPACE.

B. FURNISH ALL LABOR AND MATERIALS/EQUIPMENT TO COMPLETE DEMOLITION AND REMOVAL OF ALL ITEMS AS INDICATED. CONTRACTOR IS RESPONSIBLE FOR DISPOSAL OF ALL DEBRIS. CONTRACTOR SHALL KEEP CONSTRUCTION AREA FREE OF DUST AND DEBRIS FOR THE DURATION OF CONSTRUCTION. IF ANY QUESTIONS ARISE AS TO THE REMOVAL OF ANY MATERIAL, CLARIFY THE POINT IN QUESTION WITH DESIGNER BEFORE PROCEEDING.

C. IN PARTITIONS TO BE REMOVED, REMOVE AND CAP ALL OUTLETS, SWITCHES, WIRES, THERMOSTATS, ETC., TO THEIR SOURCE.

D. WHERE INTERIOR PARTITIONS, COLUMN FURRING, FIXTURES, CABINETRY, DOORS AND DOOR FRAMES, ARE SCHEDULED FOR REMOVAL, DISPOSE OF ALL DEBRIS AND PATCH FLOOR AND WALLS AS REQUIRED. PREPARE SURFACES FOR NEW FINISHES U.N.O. TYPICAL THROUGHOUT ENTIRE SPACE.

E. REMOVE ALL ABANDONED ELECTRICAL CONDUIT, CABLING BACKBOARD AND EQUIPMENT, TYPICAL THROUGHOUT ENTIRE SPACE. AT COMPLETION OF DEMOLITION WORK, THE CONSTRUCTION AREA(S) SHALL BE LEFT IN "BROOM CLEAN" CONDITION. ALL DEBRIS AND MISCELLANEOUS MATERIAL SHALL BE REMOVED.

F. IN ADDITION TO SPECIFIC DEMOLITION SCOPE IDENTIFIED, PERFORM MISCELLANEOUS DEMOLITION AS REQUIRED TO SUPPORT NEW CONSTRUCTION.

G. NO EXISTING SMOKE DETECTOR, PUBLIC ADDRESS SPEAKER, FIRE ALARM BOX OR SIMILAR DEVICE, INCLUDING THE ASSOCIATED WIRING SHALL BE DAMAGED DURING DEMOLITION AND SUBSEQUENT CONSTRUCTION.

H. RELOCATION OF SMOKE DETECTORS, AND FIRE ALARM EQUIPMENT, NECESSITATED BY NEW CONSTRUCTION, SHALL BE ACCOMPLISHED AS A FIRST PRIORITY, AND PER THE PLANS. NO ACTIVE SMOKE DETECTOR SHALL BE PERMANENTLY COVERED OR OTHERWISE REMOVED OR USED FOR OTHER THAN ITS INTENDED PURPOSE. REMOVE TEMPORARY COVERS DAILY.

DEMO WALL LEGEND

(E) WALL TO REMAIN

(E) ELEMENT TO BE DEMOLISHED

SIDE OF (E) WALL TO BE DEMO'D

(E) FLOOR TO BE DEMOLISHED

DEMO PLAN KEYNOTES

NOT ALL KEYNOTES APPEAR ON SHEET.

A. **KEYNOTE (A) INDICATES ITEM IS PART OF REMODEL SCOPE AND NOT SEISMIC RETROFIT RELATED. PROVIDE SEPARATE BIDS FOR REMODEL AND SEISMIC RETROFIT SCOPES OF WORK.**

1. DEMO WALL
2. DEMO FACE OF WOOD-FRAMED WALL DOWN TO STUD
3. DEMO OVHD DOOR
4. DEMO POST
5. DEMO WINDOW
6. DEMO PORTION OF FRONT ENTRY CONC. AS NEEDED TO INSTALL (N) PILES. SEE STRUCT.
7. DEMO CASEWORK
8. MAINTAIN WALL & ELECTRICAL PANEL AND CONDUIT, SEE ELEC.
9. DEMO DOOR
10. DEMO FLOOR FRAMING FOR (N) STAIR. VERIFY DIMENSIONS IN FIELD
11. SAWCUT CONC. SLAB FOR (N) FOOTING; SEE STRUCT. VERIFY DIMENSIONS IN FIELD.
12. DEMO PLUMBING FIXTURE, SEE PLUMBING
13. REMOVE & SALVAGE GENERATOR, SEE ELEC.
14. DEMO RAMP, REFER TO CIVIL FOR MORE INFORMATION
15. DEMO FLOORING DOWN TO SHEATHING.
16. DEMO EXTERIOR STAIRS
17. DEMO PORTION OF SIDEWALK, SEE CIVIL
18. REMOVE & SALVAGE FURNITURE
19. DEMO ASPHALT AS NECESSARY FOR (N) MICROPILE, SEE STRUCT. VERIFY DEMO EXTENTS IN FIELD
20. DEMO MONUMENT SIGN
21. MAINTAIN FIRE ALARM PANEL
22. ATTIC HATCH TO REMAIN
23. REMOVE & SALVAGE EYE WASH STATION
24. SAWCUT S.O.G. AS REQ'D TO INSTALL (N) PILE PER STRUCT; G.C. TO VERIFY SAWCUT SIZE.
25. REMOVE WALL FINISHES & CUT TOP PLATE FOR INSTALLATION OF (N) SEISMIC GAP
26. FLAGPOLE TO REMAIN
27. DEMO ASPHALT, SEE CIVIL
28. SAWCUT S.O.G. AS REQ'D TO INSTALL (N) PLUMBING FIXTURES; SEE PLUMBING
29. REMOVE AND SLAVAGE HVAC UNIT FOR REINSTALLATION

ZCS ENGINEERING ARCHITECTURE
127 NW D Street, Grants Pass, Oregon 97526 | 541-479-3865

REEDSPORT FIRE DISTRICT
124 N 4TH ST.
REEDSPORT, OR 97467

REEDSPORT FIRE STATION 7

REGISTERED ARCHITECT Jacob Zander OREGON CITY, OR 12412 STATE OF OREGON

△	DATE:	Description
2	Date 2	REV 2

PROJECT NO.	G-1468-21
DRAWN:	MJC,PWR,TBS
CHECKED:	JEZ
DATE:	01-24-23

DEMO FIRST FLOOR PLAN

D1.1

95% CONSTRUCTION DOCUMENTS | BID / PERMIT SET

ONE INCH EQUALS FULL SCALE 4/25/2023 2:13:37 PM

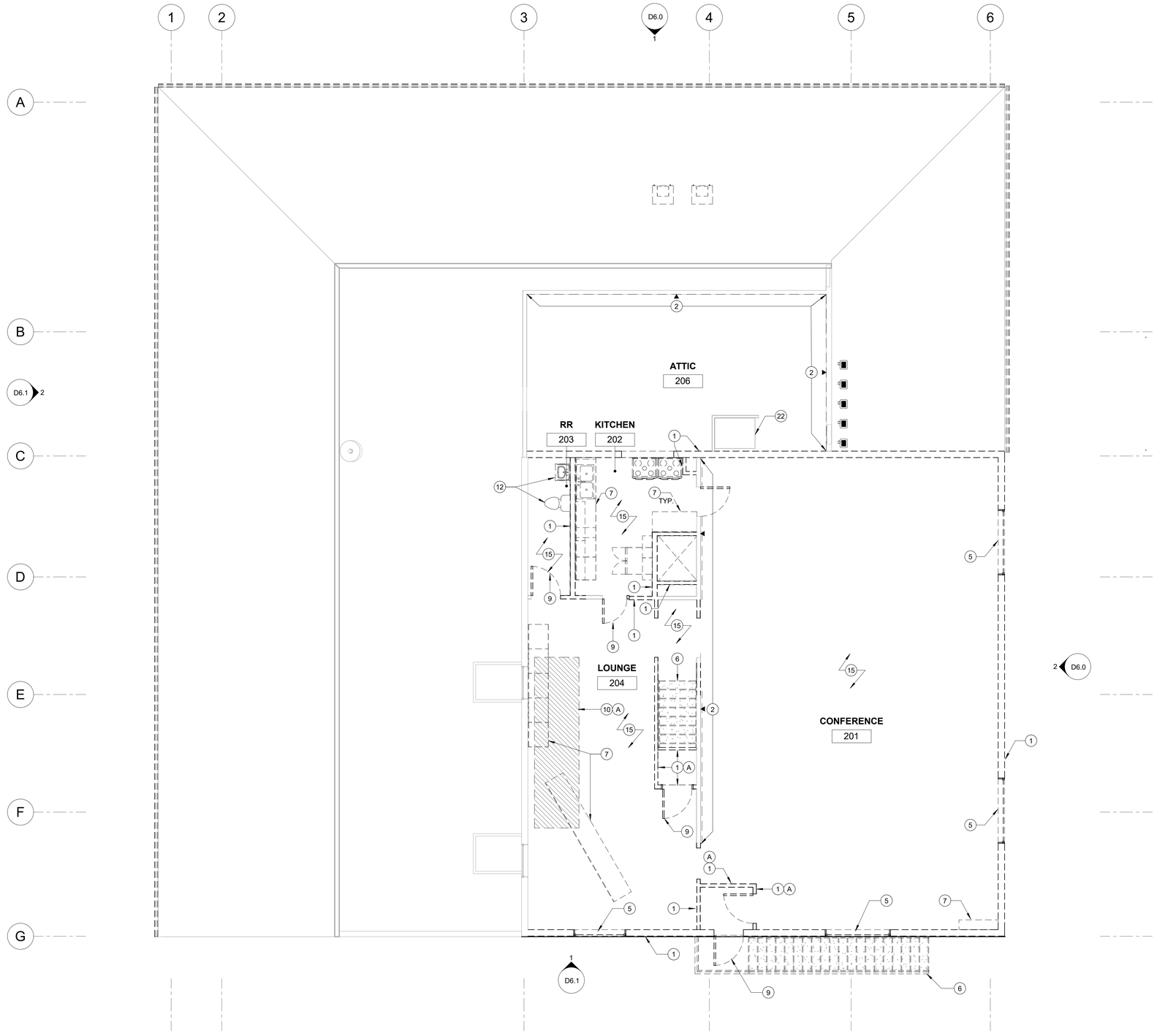

1 D1.2 DEMO SECOND FLOOR PLAN
3/16" = 1'-0"

ONE INCH EQUALS FULL SCALE

4/25/2023 2:13:33 PM

DEMO PLAN GENERAL NOTES

A. CONTRACTORS SHALL BE RESPONSIBLE FOR DISPOSAL OF ALL DEBRIS. PATCH AND REPAIR OF INTERIOR SPACE.

B. FURNISH ALL LABOR AND MATERIALS/EQUIPMENT TO COMPLETE DEMOLITION AND REMOVAL OF ALL ITEMS AS INDICATED. CONTRACTOR IS RESPONSIBLE FOR DISPOSAL OF ALL DEBRIS. CONTRACTOR SHALL KEEP CONSTRUCTION AREA FREE OF DUST AND DEBRIS FOR THE DURATION OF CONSTRUCTION. IF ANY QUESTIONS ARISE AS TO THE REMOVAL OF ANY MATERIAL, CLARIFY THE POINT IN QUESTION WITH DESIGNER BEFORE PROCEEDING.

C. IN PARTITIONS TO BE REMOVED, REMOVE AND CAP ALL OUTLETS, SWITCHES, WIRES, THERMOSTATS, ETC., TO THEIR SOURCE.

D. WHERE INTERIOR PARTITIONS, COLUMN FURRING, FIXTURES, CABINETRY, DOORS AND DOOR FRAMES, ARE SCHEDULED FOR REMOVAL, DISPOSE OF ALL DEBRIS AND PATCH FLOOR AND WALLS AS REQUIRED. PREPARE SURFACES FOR NEW FINISHES U.N.O. TYPICAL THROUGHOUT ENTIRE SPACE.

E. REMOVE ALL ABANDONED ELECTRICAL CONDUIT, CABLING BACKBOARD AND EQUIPMENT, TYPICAL THROUGHOUT ENTIRE SPACE. AT COMPLETION OF DEMOLITION WORK, THE CONSTRUCTION AREA(S) SHALL BE LEFT IN "BROOM CLEAN" CONDITION. ALL DEBRIS AND MISCELLANEOUS MATERIAL SHALL BE REMOVED.

F. IN ADDITION TO SPECIFIC DEMOLITION SCOPE IDENTIFIED, PERFORM MISCELLANEOUS DEMOLITION AS REQUIRED TO SUPPORT NEW CONSTRUCTION.

G. NO EXISTING SMOKE DETECTOR, PUBLIC ADDRESS SPEAKER, FIRE ALARM BOX OR SIMILAR DEVICE, INCLUDING THE ASSOCIATED WIRING SHALL BE DAMAGED DURING DEMOLITION AND SUBSEQUENT CONSTRUCTION.

H. RELOCATION OF SMOKE DETECTORS, AND FIRE ALARM EQUIPMENT, NECESSITATED BY NEW CONSTRUCTION, SHALL BE ACCOMPLISHED AS A FIRST PRIORITY, AND PER THE PLANS. NO ACTIVE SMOKE DETECTOR SHALL BE PERMANENTLY COVERED OR OTHERWISE REMOVED OR USED FOR OTHER THAN ITS INTENDED PURPOSE. REMOVE TEMPORARY COVERS DAILY.

DEMO WALL LEGEND

(E) WALL TO REMAIN

(E) ELEMENT TO BE DEMOLISHED

SIDE OF (E) WALL TO BE DEMO'D

(E) FLOOR TO BE DEMOLISHED

DEMO PLAN KEYNOTES

NOT ALL KEYNOTES APPEAR ON SHEET.

A. **KEYNOTE (A) INDICATES ITEM IS PART OF REMODEL SCOPE AND NOT SEISMIC RETROFIT RELATED. PROVIDE SEPARATE BIDS FOR REMODEL AND SEISMIC RETROFIT SCOPES OF WORK.**

1. DEMO WALL
2. DEMO FACE OF WOOD-FRAMED WALL DOWN TO STUD
3. DEMO OVHD DOOR
4. DEMO POST
5. DEMO WINDOW
6. DEMO PORTION OF FRONT ENTRY CONC. AS NEEDED TO INSTALL (N) PILES. SEE STRUCT.
7. DEMO CASEWORK
8. MAINTAIN WALL & ELECTRICAL PANEL AND CONDUIT, SEE ELEC.
9. DEMO DOOR
10. DEMO FLOOR FRAMING FOR (N) STAIR. VERIFY DIMENSIONS IN FIELD
11. SAWCUT CONC. SLAB FOR (N) FOOTING; SEE STRUCT. VERIFY DIMENSIONS IN FIELD.
12. DEMO PLUMBING FIXTURE, SEE PLUMBING
13. REMOVE & SALVAGE GENERATOR, SEE ELEC.
14. DEMO RAMP, REFER TO CIVIL FOR MORE INFORMATION
15. DEMO FLOORING DOWN TO SHEATHING.
16. DEMO EXTERIOR STAIRS
17. DEMO PORTION OF SIDEWALK, SEE CIVIL
18. REMOVE & SALVAGE FURNITURE
19. DEMO ASPHALT AS NECESSARY FOR (N) MICROPILE, SEE STRUCT. VERIFY DEMO EXTENTS IN FIELD
20. DEMO MONUMENT SIGN
21. MAINTAIN FIRE ALARM PANEL
22. ATTIC HATCH TO REMAIN
23. REMOVE & SALVAGE EYE WASH STATION
24. SAWCUT S.O.G. AS REQ'D TO INSTALL (N) PILE PER STRUCT; G.C. TO VERIFY SAWCUT SIZE.
25. REMOVE WALL FINISHES & CUT TOP PLATE FOR INSTALLATION OF (N) SEISMIC GAP
26. FLAGPOLE TO REMAIN
27. DEMO ASPHALT, SEE CIVIL
28. SAWCUT S.O.G. AS REQ'D TO INSTALL (N) PLUMBING FIXTURES; SEE PLUMBING
29. REMOVE AND SLAVAGE HVAC UNIT FOR REINSTALLATION

ZCS ENGINEERING ARCHITECTURE
127 NW D Street, Grants Pass, Oregon 97526 | 541-479-3865

REEDSPORT FIRE DISTRICT
124 N 4TH ST.
REEDSPORT, OR 97467

REEDSPORT FIRE STATION 7

REGISTERED ARCHITECT
Jacob Zander
OREGON CITY, OR
12412
STATE OF OREGON

△	DATE:	Description

PROJECT NO.	G-1468-21
DRAWN:	MJC,PWR,TBS
CHECKED:	JEZ
DATE:	01-24-23

DEMO SECOND FLOOR PLAN

D1.2

95% CONSTRUCTION DOCUMENTS | BID / PERMIT SET

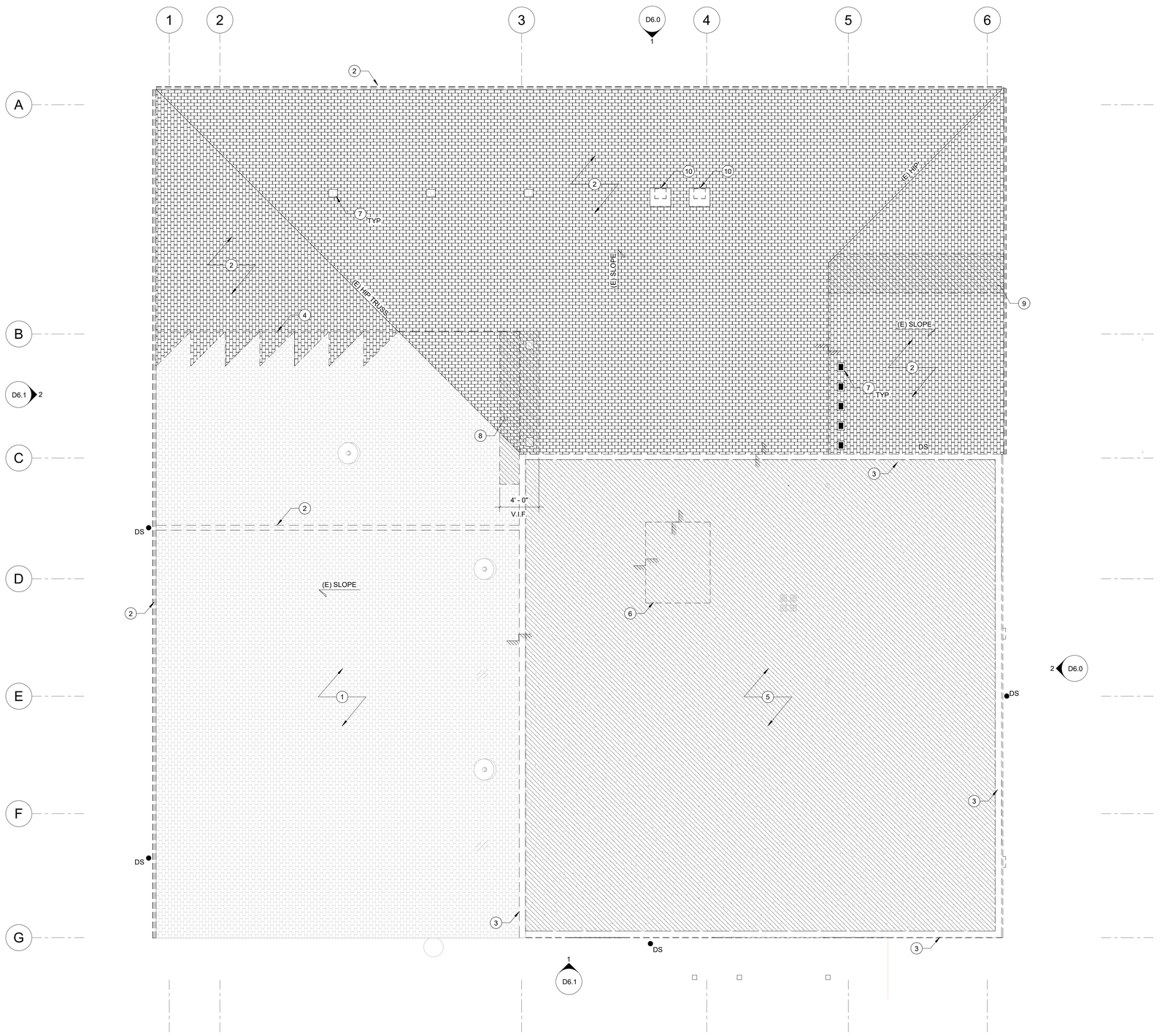

1 D1.3 DEMO ROOF PLAN
3/16" = 1'-0"

ROOF PLAN GENERAL NOTES:

A. ALL WORK & MATERIALS SHALL CONFORM TO ALL APPLICABLE STATE AND LOCAL REGULATIONS, STANDARDS AND MFR. SPECIFICATIONS AND THE 2019 OSSC. CONTACT ENGINEER FOR DIRECTIVE IN THE EVENT OF CONFLICTING STANDARDS AND SPECS.

B. VERIFY ALL DIMENSIONS, ELEVATIONS & LOCATIONS PRIOR TO CONSTRUCTION. NOTIFY ENGINEER ON RECORD OF ANY DISCREPANCIES. DIMENSIONS ON THIS PLAN ARE NOT SUITABLE FOR MATERIAL ORDERING USE. CONTRACTOR MUST FIELD VERIFY ALL DIMENSIONS PRIOR TO BIDDING AND ORDERING.

C. THE CONTRACTOR IS RESPONSIBLE FOR THE DESIGN, INSTALLATION, AND MAINTENANCE OF ALL TEMPORARY ROOF ACCESS SYSTEMS. ALL SYSTEMS MUST COMPLY WITH OSHA.

D. THE PROPER DISPOSAL OF ALL DEMOLITION MATERIALS AND DEBRIS WILL BE THE RESPONSIBILITY OF THE CONTRACTOR. THE CONTRACTOR SHALL MAKE EFFORTS TO RECYCLE AS MUCH DEMOLITION MATERIAL AS POSSIBLE.

E. COORDINATE STAGING AND MATERIALS STORAGE AREA WITH CITY PERSONNEL.

F. SECURITY OF STORED MATERIAL IS THE RESPONSIBILITY OF THE CONTRACTOR.

G. NO PORTION OF THE ROOF SHALL BE LEFT UNPROTECTED AGAINST THE ELEMENTS BETWEEN CONTRACTOR SHIFTS.

H. SEE PLAN SET AND/OR SPECIFICATIONS FOR MORE INFORMATION.

ROOF SYMBOLS

FOOTPRINT OF WALL BELOW

ROOF SLOPE

DS DOWNSPOUT LOCATION

ROOF TYPE LEGEND

(E) TPO ROOFING TO REMAIN

(E) SHINGLE ROOF TO REMAIN

(E) SHINGLE ROOFING TO BE DEMOLISHED

(E) TPO ROOFING TO BE DEMOLISHED

ROOF PLAN KEYNOTES:

1. (E) ROOFING TO REMAIN
2. DEMO (E) ROOFING DOWN TO SHEATHING; DEMO GUTTERS & DOWNSPOUTS THROUGHOUT
3. DEMO (E) PARAPET
4. CUT ROOF FRAMING FOR (N) SEISMIC JOINT; SEE STRUCT.
5. DEMO (E) ROOFING DOWN TO RAFTERS. DEMO (E) OVERBUILT SLOPED FRAMING DOWN TO RAFTERS. SEE STRUCT.
6. DEMO (E) HOSE TOWER
7. DEMO (E) ROOF VENT
8. DEMO (E) AREA OF ROOF SHEATHING. VERIFY DIMENSIONS IN FIELD
9. DEMO (E) AREA OF ROOF SHEATHING TO INSTALL (N) BEAM PER STRUCT. VERIFY DIMENSIONS IN FIELD
10. REMOVE & SALVAGE (E) HVAC UNITS FOR REINSTALLATION. MAINTAIN HVAC INSIDE BUILDING DURING CONSTRUCTION

ZCS ENGINEERING ARCHITECTURE
127 NW D Street, Grants Pass, Oregon 97526 | 541-479-3865

REEDSPORT FIRE DISTRICT
124 N 4TH ST.
REEDSPORT, OR 97467

REEDSPORT FIRE STATION 7

REGISTERED ARCHITECT Jacob Zander OREGON CITY, OR 12412 STATE OF OREGON

△	DATE:	Description

PROJECT NO.	G-1468-21
DRAWN:	MJC,PWR,TBS
CHECKED:	JEZ
DATE:	01-24-23

DEMO ROOF PLAN

D1.3

95% CONSTRUCTION DOCUMENTS | BID / PERMIT SET

ONE INCH EQUALS FULL SCALE

4/25/2023 2:13:40 PM

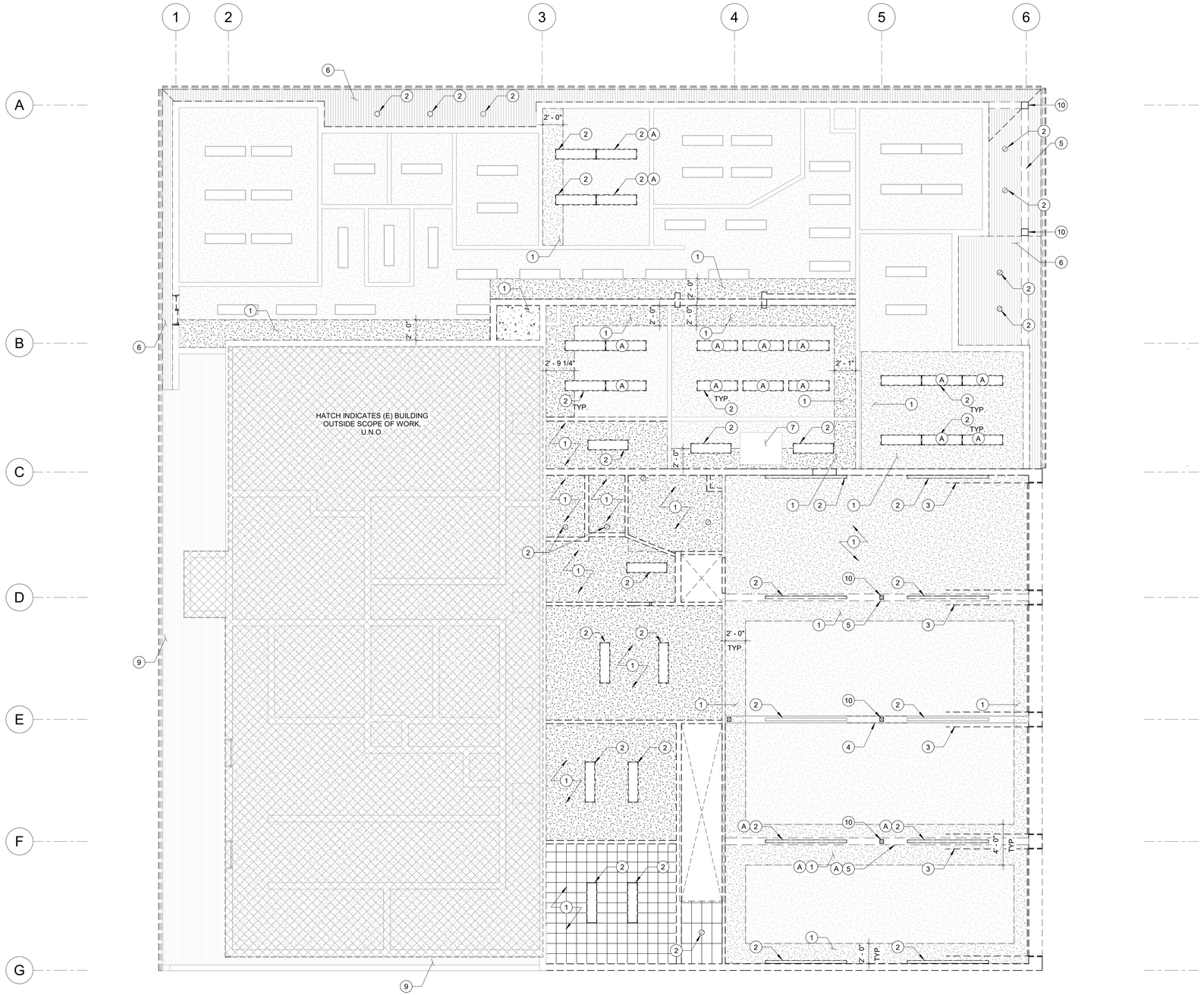

1 D2.1 FIRST FLOOR DEMO RCP
3/16" = 1'-0"

DEMO RCP GENERAL NOTES:

A. ALL EXISTING BUILDING COLUMNS, EXTERIOR WALLS AND STRUCTURAL MEMBERS TO REMAIN, U.N.O. PROJECT SPECIFIC DEMOLITION INTENT IS DEFINED AS:
   A. LIGHT FIXTURES TO BE REPLACED WHERE INDICATED.
   B. SUSPENDED CEILING GRID AND PANELS TO BE REPLACED WHERE INDICATED.
   C. GWB CEILING TO BE REPLACED WHERE INDICATED.
   D. FLOOR FINISHES AND WALL BASE TO BE REPLACED WHERE INDICATED.

B. CONTRACTORS SHALL BE RESPONSIBLE FOR DISPOSAL OF ALL DEBRIS. PATCH AND REPAIR OF INTERIOR SPACE.

C. OBTAIN DEMOLITION PERMITS AND INCLUDE ALL COSTS OF SAME IN CONTRACT PRICE.

D. FURNISH ALL LABOR AND MATERIALS/EQUIPMENT TO COMPLETE DEMOLITION AND REMOVAL OF ALL ITEMS AS INDICATED. CONTRACTOR IS RESPONSIBLE FOR DISPOSAL OF ALL DEBRIS. CONTRACTOR SHALL KEEP CONSTRUCTION AREA FREE OF DUST AND DEBRIS FOR THE DURATION OF CONSTRUCTION. IF ANY QUESTIONS ARISE AS TO THE REMOVAL OF ANY MATERIAL, CLARIFY THE POINT IN QUESTION WITH DESIGNER BEFORE PROCEEDING.

E. IN PARTITIONS TO BE REMOVED, REMOVE AND CAP ALL OUTLETS, SWITCHES, WIRES, THERMOSTATS, ETC., TO THEIR SOURCE.

F. WHERE INTERIOR PARTITIONS, COLUMN FURRING, FIXTURES, CABINETRY, DOORS AND DOOR FRAMES, ARE SCHEDULED FOR REMOVAL, DISPOSE OF ALL DEBRIS AND PATCH FLOOR AND WALLS AS REQUIRED. PREPARE SURFACES FOR NEW FINISHES U.N.O. TYPICAL THROUGHOUT ENTIRE SPACE.

G. REMOVE ALL ABANDONED ELECTRICAL CONDUIT, CABLING BACKBOARD AND EQUIPMENT, TYPICAL THROUGHOUT ENTIRE SPACE. AT COMPLETION OF DEMOLITION WORK, THE CONSTRUCTION AREA(S) SHALL BE LEFT IN "BROOM CLEAN" CONDITION. ALL DEBRIS AND MISCELLANEOUS MATERIAL SHALL BE REMOVED.

H. IN ADDITION TO SPECIFIC DEMOLITION SCOPE IDENTIFIED, PERFORM MISCELLANEOUS DEMOLITION AS REQUIRED TO SUPPORT NEW CONSTRUCTION.

I. NO EXISTING SMOKE DETECTOR, PUBLIC ADDRESS SPEAKER, FIRE ALARM BOX OR SIMILAR DEVICE, INCLUDING THE ASSOCIATED WIRING SHALL BE DAMAGED DURING DEMOLITION AND SUBSEQUENT CONSTRUCTION.

J. RELOCATION OF SMOKE DETECTORS, AND FIRE ALARM EQUIPMENT, NECESSITATED BY NEW CONSTRUCTION, SHALL BE ACCOMPLISHED AS A FIRST PRIORITY, AND PER THE PLANS. NO ACTIVE SMOKE DETECTOR SHALL BE PERMANENTLY COVERED OR OTHERWISE REMOVED OR USED FOR OTHER THAN ITS INTENDED PURPOSE. REMOVE TEMPORARY COVERS DAILY.

K. REMOVAL OF ANY EQUIPMENT, CABLING SWITCHES, AND CONDUIT PERTAINING TO DATA/COMMUNICATIONS AND TELEPHONE SHALL BE VERIFIED WITH OWNER/TENANT AND ARCHITECT.

REFLECTED CEILING LEGEND:

CEILING LEGEND :

- DEMO 1x1 DIRECT APPLIED CEILING TILE
- DEMO 1x2 DIRECT APPLIED CEILING TILE
- (E) GYP CEILING TO REMAIN
- DEMO GYP CEILING
- (E) SOFFIT TO REMAIN
- DEMO SOFFIT
- (E) LIGHTING / MECHANICAL FIXTURE
- (E) LIGHTING / MECHANICAL FIXTURE TO BE DEMO'D

DEMO RCP KEYNOTES

NOT ALL KEYNOTES APPEAR ON SHEET.

A. **KEYNOTE (A) INDICATES ITEM IS PART OF REMODEL SCOPE AND NOT SEISMIC RETROFIT RELATED. PROVIDE SEPARATE BIDS FOR REMODEL AND SEISMIC RETROFIT SCOPES OF WORK.**

1. DEMO (E) CEILING AREA
2. DEMO (E) LIGHT FIXTURE
3. DEMO (E) OVHD DOOR & TRACKS
4. DEMO (E) GYP. ON FACE OF BEAM FOR (N) ATTACHMENT; SEE STRUCT.
5. DEMO (E) BEAM. SEE STRUCT.
6. DEMO (E) SOFFIT
7. (E) ACCESS HATCH TO REMAIN
8. REMOVE & SALVAGE (E) DUCT AS RQD FOR INSTALLATION OF (N) STRUCT. COMPONENTS.
9. (E) SOFFIT TO REMAIN
10. DEMO (E) POST

ZCS ENGINEERING ARCHITECTURE
127 NW D Street, Grants Pass, Oregon 97526 | 541-479-3865

REEDSPORT FIRE DISTRICT
124 N 4TH ST.
REEDSPORT, OR 97467

REEDSPORT FIRE STATION 7

REGISTERED ARCHITECT Jacob Zander OREGON CITY, OR 12412 STATE OF OREGON

△	DATE:	Description
2	Date 2	REV 2

PROJECT NO.	G-1468-21
DRAWN:	MJC,PWR,TBS
CHECKED:	JEZ
DATE:	01-24-23

FIRST FLOOR DEMO RCP

D2.1

95% CONSTRUCTION DOCUMENTS | BID / PERMIT SET

ONE INCH EQUALS FULL SCALE 4/25/2023 2:13:41 PM

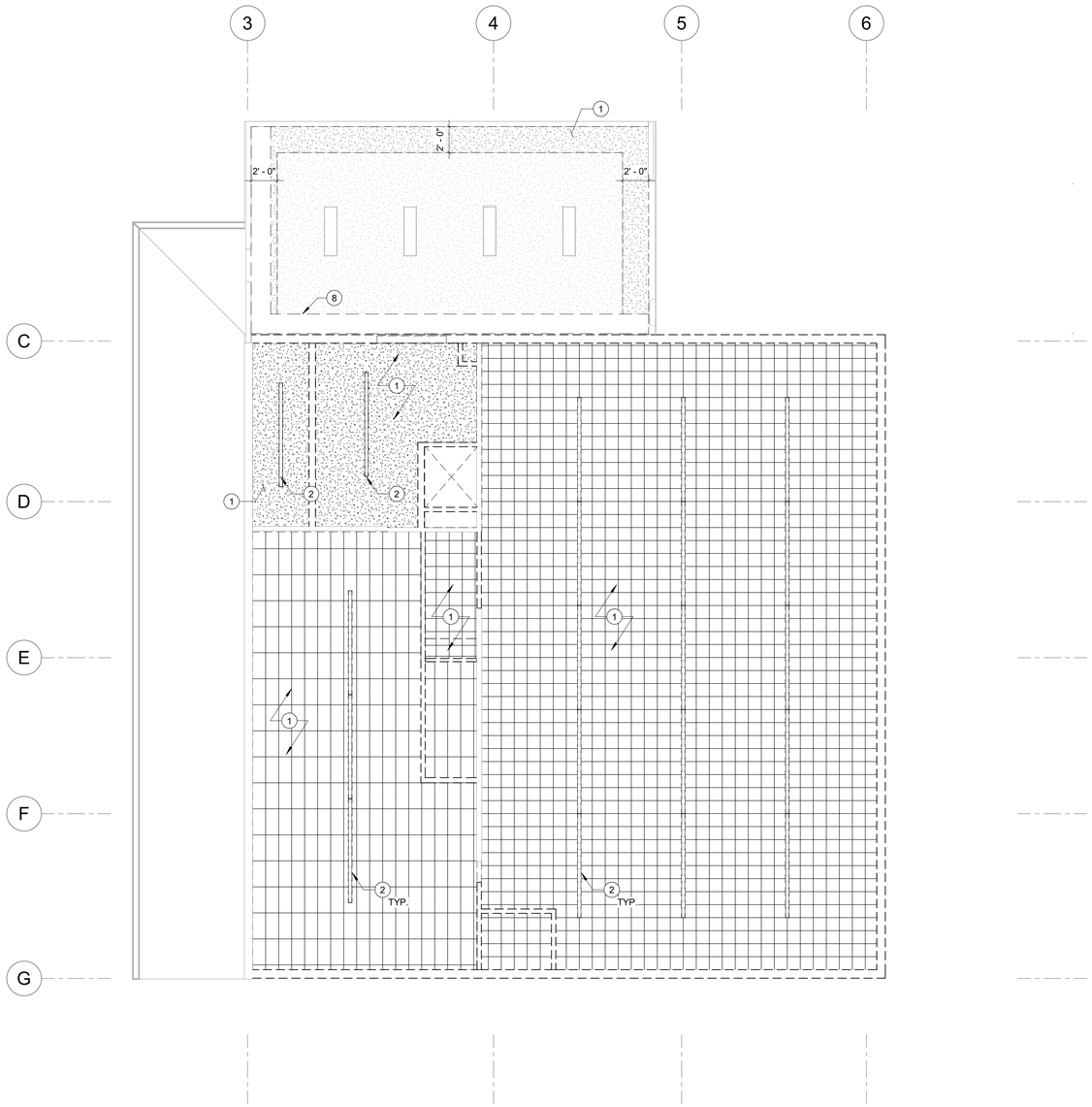

1 D2.2 SECOND FLOOR DEMO RCP
3/16" = 1'-0"

ONE INCH EQUALS FULL SCALE

4/25/2023 2:13:41 PM

DEMO RCP GENERAL NOTES:

A. ALL EXISTING BUILDING COLUMNS, EXTERIOR WALLS AND STRUCTURAL MEMBERS TO REMAIN, U.N.O. PROJECT SPECIFIC DEMOLITION INTENT IS DEFINED AS:
   - A. LIGHT FIXTURES TO BE REPLACED WHERE INDICATED.
   - B. SUSPENDED CEILING GRID AND PANELS TO BE REPLACED WHERE INDICATED.
   - C. GWB CEILING TO BE REPLACED WHERE INDICATED.
   - D. FLOOR FINISHES AND WALL BASE TO BE REPLACED WHERE INDICATED.

B. CONTRACTORS SHALL BE RESPONSIBLE FOR DISPOSAL OF ALL DEBRIS. PATCH AND REPAIR OF INTERIOR SPACE.

C. OBTAIN DEMOLITION PERMITS AND INCLUDE ALL COSTS OF SAME IN CONTRACT PRICE.

D. FURNISH ALL LABOR AND MATERIALS/EQUIPMENT TO COMPLETE DEMOLITION AND REMOVAL OF ALL ITEMS AS INDICATED. CONTRACTOR IS RESPONSIBLE FOR DISPOSAL OF ALL DEBRIS. CONTRACTOR SHALL KEEP CONSTRUCTION AREA FREE OF DUST AND DEBRIS FOR THE DURATION OF CONSTRUCTION. IF ANY QUESTIONS ARISE AS TO THE REMOVAL OF ANY MATERIAL, CLARIFY THE POINT IN QUESTION WITH DESIGNER BEFORE PROCEEDING.

E. IN PARTITIONS TO BE REMOVED, REMOVE AND CAP ALL OUTLETS, SWITCHES, WIRES, THERMOSTATS, ETC., TO THEIR SOURCE.

F. WHERE INTERIOR PARTITIONS, COLUMN FURRING, FIXTURES, CABINETRY, DOORS AND DOOR FRAMES, ARE SCHEDULED FOR REMOVAL, DISPOSE OF ALL DEBRIS AND PATCH FLOOR AND WALLS AS REQUIRED. PREPARE SURFACES FOR NEW FINISHES U.N.O. TYPICAL THROUGHOUT ENTIRE SPACE.

G. REMOVE ALL ABANDONED ELECTRICAL CONDUIT, CABLING BACKBOARD AND EQUIPMENT, TYPICAL THROUGHOUT ENTIRE SPACE. AT COMPLETION OF DEMOLITION WORK, THE CONSTRUCTION AREA(S) SHALL BE LEFT IN "BROOM CLEAN" CONDITION. ALL DEBRIS AND MISCELLANEOUS MATERIAL SHALL BE REMOVED.

H. IN ADDITION TO SPECIFIC DEMOLITION SCOPE IDENTIFIED, PERFORM MISCELLANEOUS DEMOLITION AS REQUIRED TO SUPPORT NEW CONSTRUCTION.

I. NO EXISTING SMOKE DETECTOR, PUBLIC ADDRESS SPEAKER, FIRE ALARM BOX OR SIMILAR DEVICE, INCLUDING THE ASSOCIATED WIRING SHALL BE DAMAGED DURING DEMOLITION AND SUBSEQUENT CONSTRUCTION.

J. RELOCATION OF SMOKE DETECTORS, AND FIRE ALARM EQUIPMENT, NECESSITATED BY NEW CONSTRUCTION, SHALL BE ACCOMPLISHED AS A FIRST PRIORITY, AND PER THE PLANS. NO ACTIVE SMOKE DETECTOR SHALL BE PERMANENTLY COVERED OR OTHERWISE REMOVED OR USED FOR OTHER THAN ITS INTENDED PURPOSE. REMOVE TEMPORARY COVERS DAILY.

K. REMOVAL OF ANY EQUIPMENT, CABLING SWITCHES, AND CONDUIT PERTAINING TO DATA/COMMUNICATIONS AND TELEPHONE SHALL BE VERIFIED WITH OWNER/TENANT AND ARCHITECT.

REFLECTED CEILING LEGEND:

CEILING LEGEND :

- DEMO 1x1 DIRECT APPLIED CEILING TILE
- DEMO 1x2 DIRECT APPLIED CEILING TILE
- (E) GYP CEILING TO REMAIN
- DEMO GYP CEILING
- (E) SOFFIT TO REMAIN
- DEMO SOFFIT
- (E) LIGHTING / MECHANICAL FIXTURE
- (E) LIGHTING / MECHANICAL FIXTURE TO BE DEMO'D

DEMO RCP KEYNOTES

NOT ALL KEYNOTES APPEAR ON SHEET.

A. **KEYNOTE (A) INDICATES ITEM IS PART OF REMODEL SCOPE AND NOT SEISMIC RETROFIT RELATED. PROVIDE SEPARATE BIDS FOR REMODEL AND SEISMIC RETROFIT SCOPES OF WORK.**

1. DEMO (E) CEILING AREA
2. DEMO (E) LIGHT FIXTURE
3. DEMO (E) OVHD DOOR & TRACKS
4. DEMO (E) GYP. ON FACE OF BEAM FOR (N) ATTACHMENT; SEE STRUCT.
5. DEMO (E) BEAM. SEE STRUCT.
6. DEMO (E) SOFFIT
7. (E) ACCESS HATCH TO REMAIN
8. REMOVE & SALVAGE (E) DUCT AS RQD FOR INSTALLATION OF (N) STRUCT. COMPONENTS.
9. (E) SOFFIT TO REMAIN
10. DEMO (E) POST

ZCS ENGINEERING ARCHITECTURE
127 NW D Street, Grants Pass, Oregon 97526 | 541-479-3865

REEDSPORT FIRE DISTRICT
124 N 4TH ST.
REEDSPORT, OR 97467

REEDSPORT FIRE STATION 7

REGISTERED ARCHITECT
Jacob Zander
OREGON CITY, OR
12412
STATE OF OREGON

△	DATE:	Description

PROJECT NO.	G-1468-21
DRAWN:	MJC,PWR,TBS
CHECKED:	JEZ
DATE:	01-24-23

SECOND FLOOR DEMO RCP

D2.2

95% CONSTRUCTION DOCUMENTS | BID / PERMIT SET

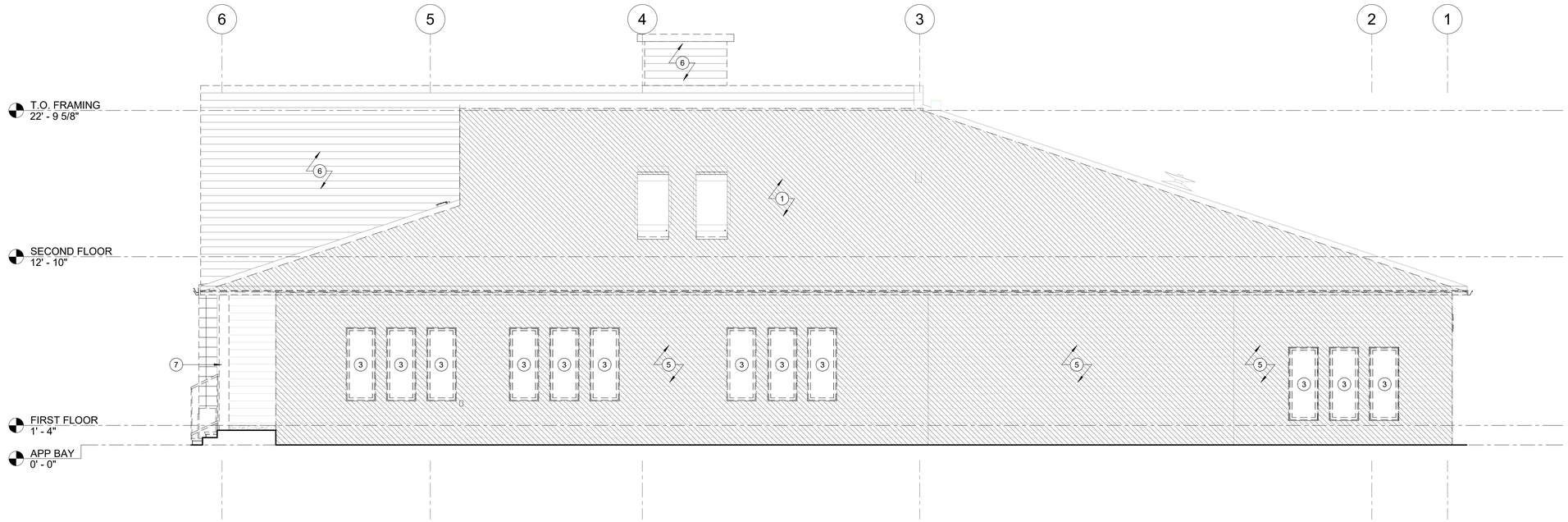

1 D6.0 DEMO NORTH ELEVATION
1/4" = 1'-0"

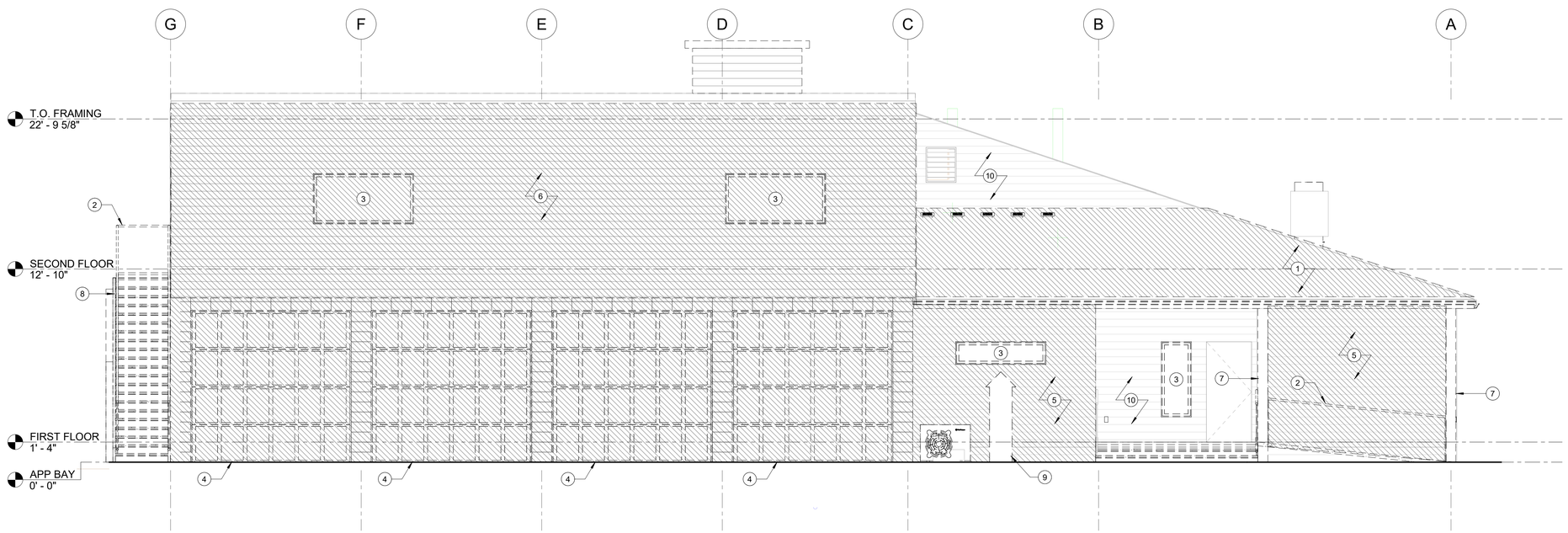

2 D6.0 DEMO EAST ELEVATION
1/4" = 1'-0"

DEMO ELEVATION LEGEND

AREA TO BE DEMOLISHED; REFER TO KEYNOTES FOR EXTENT OF DEMOLITION

DEMO ELEVATION KEYNOTES

1. DEMO (E) ROOFING. ROOF-MOUNTED EQUIP. TO REMAIN; U.N.O.; SEE ROOF DEMO PLAN
2. DEMO (E) RAILING
3. DEMO (E) WINDOW
4. DEMO (E) DOOR
5. DEMO FACE OF (E) WOOD-FRAMED WALL DOWN TO STUD
6. DEMO (E) WALL
7. DEMO (E) POST
8. DEMO (E) STAIRS
9. DEMO (E) MONUMENT SIGN
10. (E) WALL TO REMAIN

ZCS
ENGINEERING
ARCHITECTURE
127 NW D Street, Grants Pass, Oregon 97526 | 541-479-3865

REEDSPORT FIRE DISTRICT
124 N 4TH ST.
REEDSPORT, OR 97467

REEDSPORT FIRE STATION 7

REEDSPORT FIRE DEPT. VOLUNTEER

REGISTERED ARCHITECT
Jacob Zander
OREGON CITY, OR
12412
STATE OF OREGON

△	DATE:	Description

PROJECT NO.	G-1468-21
DRAWN:	MJC,PWR,TBS
CHECKED:	JEZ
DATE:	01-24-23

DEMO EXTERIOR ELEVATIONS

D6.0

95% CONSTRUCTION DOCUMENTS | BID / PERMIT SET

ONE INCH EQUALS FULL SCALE

4/25/2023 2:13:43 PM

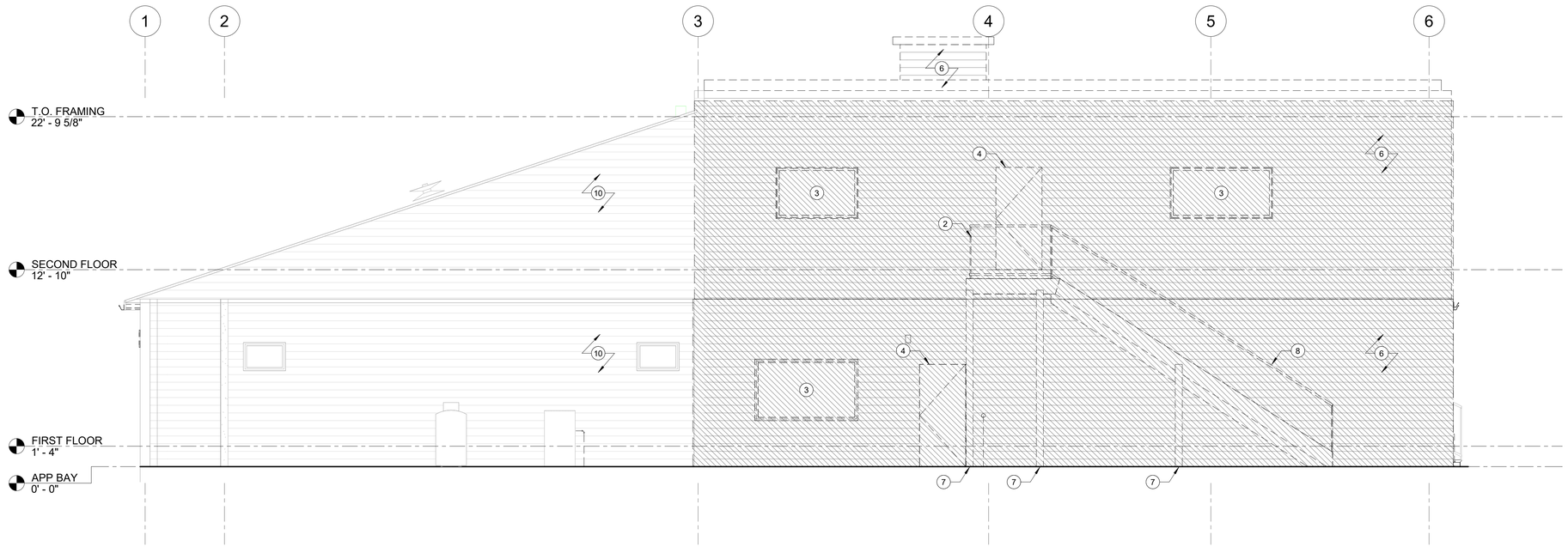

1 D6.1 DEMO SOUTH ELEVATION

1/4" = 1'-0"

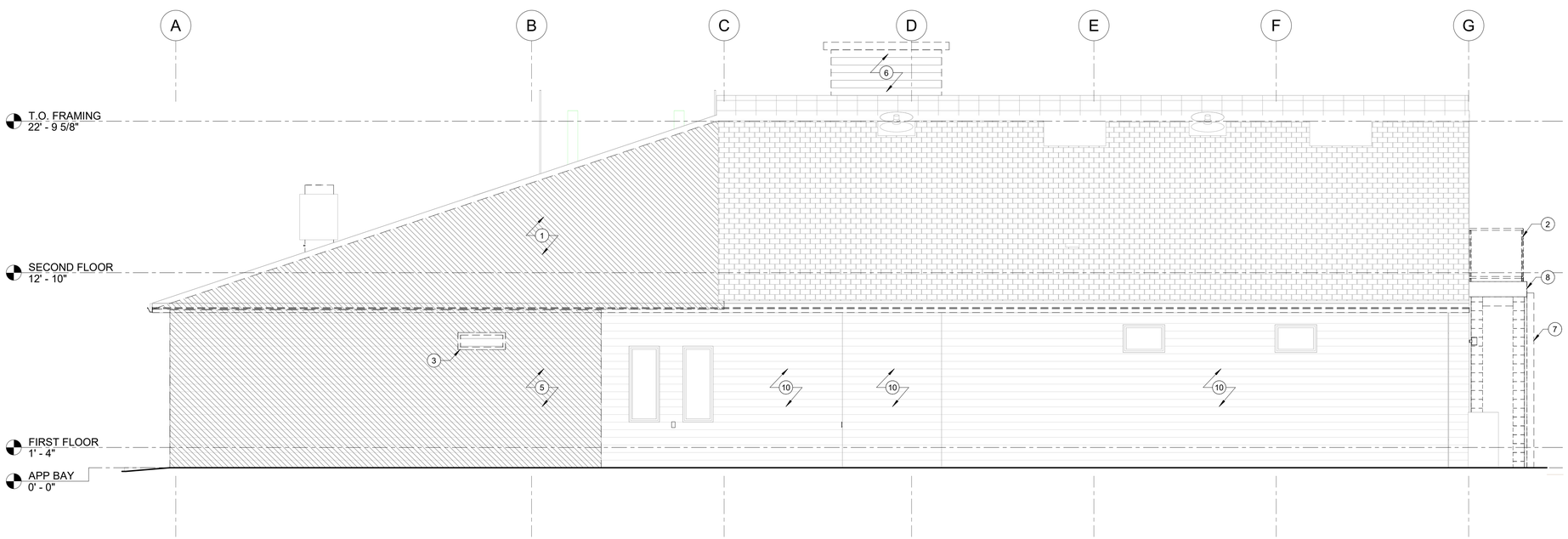

2 D6.1 DEMO WEST ELEVATION

1/4" = 1'-0"

ONE INCH EQUALS FULL SCALE

4/25/2023 2:13:44 PM

DEMO ELEVATION LEGEND

AREA TO BE DEMOLISHED; REFER TO KEYNOTES FOR EXTENT OF DEMOLITION

DEMO ELEVATION KEYNOTES

1. DEMO (E) ROOFING. ROOF-MOUNTED EQUIP. TO REMAIN; U.N.O.; SEE ROOF DEMO PLAN
2. DEMO (E) RAILING
3. DEMO (E) WINDOW
4. DEMO (E) DOOR
5. DEMO FACE OF (E) WOOD-FRAMED WALL DOWN TO STUD
6. DEMO (E) WALL
7. DEMO (E) POST
8. DEMO (E) STAIRS
9. DEMO (E) MONUMENT SIGN
10. (E) WALL TO REMAIN

ZCS ENGINEERING ARCHITECTURE
127 NW D Street, Grants Pass, Oregon 97526 | 541-479-3865

REEDSPORT FIRE DISTRICT
124 N 4TH ST.
REEDSPORT, OR 97467

REEDSPORT FIRE STATION 7

REGISTERED ARCHITECT Jacob Zander OREGON CITY, OR 12412 STATE OF OREGON

△	DATE:	Description

PROJECT NO.	G-1468-21
DRAWN:	MJC,PWR,TBS
CHECKED:	JEZ
DATE:	01-24-23

DEMO EXTERIOR ELEVATIONS

D6.1

95% CONSTRUCTION DOCUMENTS | BID / PERMIT SET

REEDSPORT FIRE STATION 7

124 N 4TH ST, REEDSPORT, OR 97467

CIVIL NOTES

GENERAL CIVIL NOTES:

1. ALL WORK AND MATERIALS SHALL CONFORM TO THE 2021 OREGON STANDARD SPECIFICATIONS FOR CONSTRUCTION, CURRENT OREGON PLUMBING SPECIALTY CODE, AND ALL APPLICABLE STATE, CITY, AND COUNTY REGULATIONS AND STANDARDS. CONTACT ENGINEER FOR DIRECTIVE IN THE EVENT OF CONFLICTING STANDARDS.
2. ALL WORK WITHIN THE PUBLIC RIGHT-OF-WAY SHALL BE COORDINATED WITH THE GOVERNING AGENCY'S INSPECTOR AND SHALL CONFORM TO THAT AGENCY'S CURRENT ENGINEERING STANDARD SPECIFICATIONS AND DETAILS.
3. THE GENERAL CONTRACTOR AND ALL THEIR AFFILIATES SHALL VERIFY ALL DIMENSIONS, ELEVATIONS, AND LOCATIONS PRIOR TO CONSTRUCTION. IMMEDIATELY NOTIFY ENGINEER OF ANY DISCREPANCIES.
4. ALL CONSTRUCTION STAKING, GRADE SURVEYING, AND HORIZONTAL LAYOUT SHALL BE THE RESPONSIBILITY OF THE CONTRACTOR AND SHALL BE PERFORMED BY A PROFESSIONAL LAND SURVEYOR LICENSED IN THE STATE OF OREGON; COORDINATE WITH ENGINEER PRIOR TO CONSTRUCTION.
5. ALL EXISTING UTILITIES IDENTIFIED IN THIS PLAN SET ARE NOT INTENDED TO BE EXACT OR COMPLETE. IT SHALL BE THE RESPONSIBILITY OF THE CONTRACTOR TO IDENTIFY ALL UTILITIES AND PROTECT AS REQUIRED DURING THE COURSE OF CONSTRUCTION. CALL THE "OREGON UTILITY NOTIFICATION CENTER" AT 1-800-332-2344 TO LOCATE EXISTING UTILITIES, 48 HOURS BEFORE DIGGING.
6. CONTRACTOR SHALL NOTIFY ALL APPLICABLE REGULATORY AGENCIES AND UTILITY COMPANIES 48 HOURS PRIOR TO BEGINNING WORK.
7. ALL EXCAVATION, TRENCH BACK FILL, PARKING LOT/ROAD SUB-GRADE, FLAT WORK SUB-GRADE, COMPACTION REQUIREMENTS, ETC. SHALL BE AS NOTED IN THE SITE PREPARATION NOTES AND/OR THE PROJECT GEOTECHNICAL REPORT.
8. ALL BASE ROCK PLACED UNDER PAVEMENT AND IN UTILITY TRENCHES SHALL CONFORM TO THE 2021 OREGON STANDARD SPECIFICATIONS FOR CONSTRUCTION.
9. ALL ASPHALT CONCRETE AND PORTLAND CEMENT CONCRETE PAVEMENT AND ITS PLACEMENT SHALL CONFORM TO THE 2021 OREGON STANDARD SPECIFICATIONS FOR CONSTRUCTION.
10. ALL SITE CONCRETE SHALL BE f'c = 3,500 psi @ 28 DAYS, 6% ENTRAINED AIR, 4" SLUMP (UNLESS NOTED OTHERWISE). ALL CONCRETE WITHIN THE PUBLIC RIGHT-OF-WAY SHALL BE f'c = 3,500 psi.
11. ALL SERVICES AND SLEEVES SHALL BE PLUGGED AS REQUIRED TO ENSURE THAT NO FOREIGN MATERIALS ENTER THE LINE.
12. CONTRACTOR SHALL PROVIDE THE ENGINEER WITH AN AS-BUILT DRAWING OF ALL UTILITY SERVICE INSTALLATIONS INCLUDING THE SERVICE SIZE, TYPE, DEPTH OF MAIN, TYPE OF CONNECTION AT MAIN, INSTALLATION DATE, LOCATION, AND SKETCH (AS APPLICABLE).
13. CONTRACTOR SHALL OBTAIN ALL APPLICABLE PERMITS PRIOR TO COMMENCEMENT OF ANY CONSTRUCTION ACTIVITIES. COORDINATE WITH THE ENGINEER PRIOR TO CONSTRUCTION TO IDENTIFY PERMIT REQUIREMENTS.
14. ALL TEMPORARY PROTECTION AND DIRECTION OF TRAFFIC SHALL BE BY THE CONTRACTOR AND CONFORM WITH BOTH THE MANUAL ON UNIFORM TRAFFIC CONTROL DEVICES AND THE ODOT MANUAL ON SHORT TERM TRAFFIC CONTROL (AS APPLICABLE).
15. PREPARATION OF ALL LANDSCAPED AREAS SHALL BE AS NOTED ON THE LANDSCAPE PLANS. THE ENGINEER SHALL INSPECT ALL LANDSCAPE PLANTER GRADES PRIOR TO RECEIVING FINAL SURFACE TREATMENT.
16. HOLD SUB-GRADE ELEVATIONS DOWN 6" WITHIN LANDSCAPE AREAS RECEIVING GROUND COVER AND/OR LAWN. REFER TO LANDSCAPE PLANS FOR ADDITIONAL INFORMATION PERTAINING TO TOP SOIL REQUIREMENTS.
17. SEE LANDSCAPE PLANS FOR IRRIGATION SLEEVE PLACEMENT LOCATIONS AND REQUIREMENTS.
18. SAND SEAL AND TACK ALL CUT ASPHALT EDGES WHEN PLACING NEW ASPHALT ADJACENT TO EXISTING ASPHALT.
19. SEE PLAN SET FOR ADDITIONAL INFORMATION.

EROSION CONTROL NOTE:

DRAWINGS C0.10 AND C1.00 CONTAIN AN EROSION AND SEDIMENT CONTROL PLAN THAT MUST BE IMPLEMENTED PRIOR TO COMMENCEMENT OF CONSTRUCTION ACTIVITIES. THE INFORMATION CONTAINED WITHIN THE REFERENCED DRAWINGS SHALL BE CONSIDERED A MINIMUM AND SHALL BE MODIFIED AS REQUIRED BY THE CONTRACTOR AND CITY INSPECTOR, TO CONTAIN ALL SEDIMENT ON SITE. SPECIAL ATTENTION SHALL BE TAKEN AT ALL EXISTING STORM DRAIN CATCH BASINS AND STORM DRAIN CHANNELS AS TO ELIMINATE ANY SEDIMENT TRANSFER INTO THE EXISTING STORM DRAIN SYSTEM.

AN ALL WEATHER ROCK SURFACE SHALL BE PROVIDED AT ALL CONSTRUCTION SITE ENTRANCES. CONTRACTOR MAY ELECT TO USE EXISTING GRAVEL PAVING, AC PAVING, ETC. (IF ACCEPTABLE TO CITY INSPECTOR). ALL CONSTRUCTION SHALL BE MAINTAINED WITHIN THE DEVELOPMENT LIMITS OF THIS PHASE. REFER TO DRAWINGS C0.10 AND C1.00 FOR ADDITIONAL INFORMATION.

ONE INCH EQUALS FULL SCALE

SITE PREPARATION NOTES:

CLEARING AND GRUBBING -

1. REFER TO STRUCTURAL (FOUNDATION) PLANS FOR SPECIFIC SOIL EXCAVATION AND BACKFILL REQUIREMENTS WITHIN BUILDING FOOTPRINT.
2. ALL AREAS BELOW ROADWAYS, PARKING AREAS, AND WALKWAYS SHALL BE CLEARED AND GRUBBED OF ALL PAVEMENT, FOREIGN MATTER, DEBRIS, ORGANIC AND DISTURBED MATERIAL, (U.N.O.) STRIPPING DEPTHS WILL VARY DEPENDING ON LOCATION AND PAVEMENT SECTION REQUIREMENTS. ALL EXPOSED MATERIAL SHALL BE MOISTURE CONDITIONED TO WITHIN 2% OF OPTIMUM PRIOR TO PLACEMENT OF FILL MATERIAL DESCRIBED BELOW.
3. ALL CLEARED AND GRUBBED MATERIAL NOT UTILIZED FOR THE PROJECT SHALL BE REMOVED FROM THE CONSTRUCTION SITE. CONTRACTOR SHALL COORDINATE APPROVED DISPOSAL LOCATION.
4. ALL AREAS WITH ABANDONED UTILITY LINES, STORM DRAINS, UNDERGROUND TANKS, ETC. WHICH PROVIDE VOID SPACE BENEATH THE SURFACE SHALL BE LOCATED AND REMOVED PRIOR TO GRADING ACTIVITIES.
5. ALL HOLES, DEPRESSIONS, AND UNDISTURBED NATIVE MATERIAL SHALL BE CLEARED OF ALL LOOSE AND ORGANIC MATERIAL PRIOR TO BACKFILLING WITH APPROVED STRUCTURAL FILL.
6. AFTER CLEARING THE ABOVE MENTIONED AREAS, ALL EXPOSED SUB-GRADE SHALL BE PROOF ROLLED WITH A LOADED DUMP TRUCK OR HEAVY NON-VIBRATORY ROLLER. SOILS SHALL BE REMOVED AND RECOMPACTED OR REPLACED WITH APPROVED IMPORTED STRUCTURAL FILL IF THEY DO NOT DEMONSTRATE A FIRM, UNYIELDING CONDITION. GEOTECHNICAL ENGINEER OF RECORD SHALL APPROVE SUB-GRADE SURFACE PRIOR TO STRUCTURAL FILL IMPORT EXPLAINED BELOW.

STRUCTURAL FILL PLACEMENT AND COMPACTION -

7. APPROVED STRUCTURAL FILL SHALL BE IMPORTED AND PLACED BENEATH AREAS RECEIVING ASPHALT AND/OR CONCRETE PAVEMENT.
8. ALL VEHICULAR TRAFFIC AREAS RECEIVING ASPHALT AND/OR CONCRETE SHALL BE PROVIDED WITH AN APPROVED WOVEN GEOTEXTILE FABRIC APPLIED DIRECTLY OVER THE SUB-GRADE DESCRIBED ABOVE. SEE PLAN SET FOR ADDITIONAL DETAILS.
9. STRUCTURAL FILL MATERIALS SHALL BE APPROVED BY THE GEOTECHNICAL ENGINEER OF RECORD PRIOR TO IMPORTING. ALL FILL SHALL BE FREE OF ORGANIC AND EXPANSIVE CLAY MATERIAL. ALL BASE ROCK SHALL CONFORM TO THE SPECIFICATIONS IDENTIFIED IN THE PLAN SET.
10. STRUCTURAL FILL PLACEMENT LIFTS TO BE DETERMINED BY THE GEOTECHNICAL ENGINEER OF RECORD BASED ON MATERIAL PROPERTIES AND TYPE OF COMPACTION EQUIPMENT USED. BASE ROCK PLACEMENT LIFTS SHALL NOT EXCEED 12" (6" WHERE USING LIGHT OR HAND-OPERATED EQUIPMENT IS USED). EACH LIFT SHALL BE NEARLY EQUAL IN THICKNESS AND COMPACTED TO A MINIMUM OF 95% OF ASTM D698. FILLS SHALL BE PLACED AT OR SLIGHTLY ABOVE THEIR OPTIMUM MOISTURE CONTENT.
11. IN ADDITION TO THE NOTES ABOVE, ALL SITE PREPARATION AND SUBSURFACE WORK SHALL CONFORM TO THE PROJECT GEOTECHNICAL INVESTIGATION REPORT AS PREPARED BY "FOUNDATION ENGINEERING", DATED 05-20-2022.

RESTORATION STATEMENT:

CONTRACTOR SHALL RESTORE BACK TO ORIGINAL CONDITION, PRIOR TO CONTRACT COMPLETION, ALL DISTURBED SURFACES IMPACTED DURING CONSTRUCTION. THIS INCLUDES, BUT IS NOT LIMITED TO, CONSTRUCTION ACCESS, SIDEWALKS, CURBS, ASPHALT, LAWN AND LANDSCAPE AREAS, ETC. DISTURBED AREAS TO BE GRADED SMOOTH AND ADEQUATELY SLOPED TO DRAIN. AREA SHALL BE CLEAN AND FINISH GRADED BEFORE FINAL DEMOBILIZATION. COORDINATE WITH ENGINEER AND OWNER AT THE TIME OF PROJECT CONSTRUCTION COMPLETION.

UTILITY STATEMENT:

EXISTING UNDERGROUND UTILITIES ILLUSTRATED IN THESE PLANS ARE APPROXIMATED BASED ON MAPS OBTAINED FROM THE CITY OF REEDSPORT PUBLIC WORKS FILES, OR HAVE BEEN LOCATED BY A UTILITY LOCATE COMPANY. LAYOUT INDICATED IS NOT TO BE RELIED ON AS BEING EXACT OR COMPLETE. ALL LINES WITHIN PROJECTED WORK ZONE SHALL BE FIELD VERIFIED AS REQUIRED PRIOR TO CONSTRUCTION.

ATTENTION:
OREGON LAW REQUIRES YOU TO FOLLOW RULES ADOPTED BY THE OREGON UTILITY NOTIFICATION CENTER. THOSE RULES ARE SET FORTH IN OAR 952-001-0010 THROUGH 952-001-0090. YOU MAY OBTAIN COPIES OF THE RULES BY CALLING THE CENTER. (NOTE: THE TELEPHONE NUMBER FOR THE OREGON UTILITY NOTIFICATION CENTER IS (503 232-1987).

CIVIL LEGEND

HATCHES & LINE TYPES:

- NEW CONCRETE PAVING - VEHICULAR
- NEW CONCRETE PAVING - PEDESTRIAN
- NEW ASPHALT PAVING
- NEW UNIT PAVERS
- NEW LANDSCAPING
- FO — EXISTING FIBER
- G — EXISTING NATURAL GAS
- P — EXISTING POWER - BURIED
- OHP — EXISTING POWER - OVERHEAD
- PROPERTY LINE
- SS — EXISTING SANITARY SEWER - GRAVITY
- SD — EXISTING STORM SEWER
- SD — NEW STORM SEWER
- 15 — EXISTING SURFACE CONTOUR
- TEL — EXISTING TELEPHONE - BURIED
- W — EXISTING WATER - POTABLE
- X — NEW FENCE

SYMBOLS (NEW):

- ac 15.00 / ac 15.00 / 2.0% — GRADE SPOT ELEVATION
- GRADING SLOPE
- X — NEW FENCING
- TRENCH DRAIN
- BOLLARD
- SIGN

SYMBOLS (EXISTING):

- (e) ac ±15.0 / (e) ac ±15.0 — GRADE SPOT ELEVATION
- S — SANITARY SEWER MANHOLE
- D — STORM DRAIN MANHOLE
- CATCH BASIN
- ROOF DOWNSPOUT LOCATION
- T — TELEPHONE/COMMUNICATIONS RISER
- WATER METER
- WATER VALVE
- FIRE HYDRANT
- PARKING BUMPER
- BOLLARD
- SIGN
- TREE - SHAPE VARIES

SITE INFORMATION

SITE LOCATION:	124 N 4TH STREET REEDSPORT, OR 97467
TAX MAP:	T21S-R12W-S35CA
TAX LOT:	11500
SITE ACREAGE:	±0.46 ACRES
ZONING:	COMMERCIAL

ABBREVIATIONS

APWA	AMERICAN PUBLIC WORKS ASSOCIATION
ASTM	AMERICAN STANDARD TEST METHOD
AWWA	AMERICAN WATER WORKS ASSOCIATION
AC	ASPHALT
BMP	BEST MANAGEMENT PRACTICE
CONC	CONCRETE
DEQ	DEPARTMENT OF ENVIRONMENTAL QUALITY
DWG	DRAWING
EPA	ENVIRONMENTAL PROTECTION AGENCY
ESC	EROSION AND SEDIMENT CONTROL
(E)	EXISTING
EG	EXISTING GRADE
FFE	FINISHED FLOOR ELEVATION
FG	FINISHED GRADE
GC	GENERAL CONTRACTOR
GRD	GROUND
HMAC	HOT MIX ASPHALT CONCRETE
IE	INVERT ELEVATION
LF	LINEAL FEET
MAX	MAXIMUM
MIN	MINIMUM
(N)	NEW
NAVD	NORTH AMERICAN VERTICAL DATUM
ODOT	OREGON DEPARTMENT OF TRANSPORTATION
OSSC	OREGON STRUCTURAL SPECIALTY CODE
OFOI	OWNER FURNISHED, OWNER INSTALLED
PG	PERFORMANCE GRADE
PVC	POLYVINYL CHLORIDE
PVR	PAVER
ROW	RIGHT-OF-WAY
SW	SIDEWALK
TBC	TOP OF BACK OF CURB
TFC	TOP OF FACE OF CURB
TYP	TYPICAL
UPC	UNIFORM PLUMBING CODE

INSPECTION TESTING AND FREQUENCY TABLE	NOTE 1
STREETS, PARKING LOTS, FILLS, ETC.	
SUB-GRADE: 1 TEST PER 4,000 sqft PER LIFT (4 TESTS MIN.)	NOTE 2 AND 3
ENGINEERED FILL: 1 TEST PER 4,000 sqft PER LIFT (4 TESTS MIN.)	NOTE 2 AND 4
BASEROCK: 1 TEST PER 4,000 sqft PER LIFT (4 TESTS MIN.)	NOTE 2 AND 3
ASPHALT: 1 TEST PER 6,000 sqft PER LIFT (4 TESTS MIN.)	NOTE 2
UTILITY TRENCHING	
TRENCH BACKFILL: 1 TEST PER 200 LINEAL FEET PER LIFT (4 TESTS MIN.)	NOTE 2
TRENCH ASPHALT RESTORATION: 1 TEST PER 300 LINEAL FEET PER LIFT (4 TESTS MIN.)	NOTE 2
SITE CONCRETE	
SLUMP, AIR AND CYLINDERS FOR ALL SITE CONCRETE AND PCC PAVEMENTS. UNLESS OTHERWISE SPECIFIED, ONE SET OF CYLINDERS PER 100 CUBIC YARDS (OR PORTION THEREOF) OF CONCRETE POURED PER DAY. SLUMP AND AIR TESTS REQUIRED ON SAME LOAD AS CYLINDERS.	NOTE 2
BUILDING PERMIT INSPECTION AND SPECIAL INSPECTIONS FOR STRUCTURAL CONCRETE, MASONRY, EPOXY ANCHORS, ETC. AS REQUIRED BY PROJECT STRUCTURAL ENGINEER AND CURRENT BUILDING CODES.	NOTE 2

INSPECTION TESTING AND FREQUENCY SPECIAL NOTES

NOTE 1:	CONTRACTOR IS RESPONSIBLE FOR SCHEDULING ANY AND ALL TESTING, INSPECTIONS, AND SPECIAL INSPECTIONS AS REQUIRED BY PROJECT ENGINEER, CURRENT BUILDING CODES OR JURISDICTIONS HAVING AUTHORITY. ALL TESTING MUST BE COMPLETED AND APPROVED PRIOR TO SUBSEQUENT WORK. ADDITIONAL OR FREQUENT TESTS MAY BE REQUIRED BY AGENCY, BUILDING OFFICIAL, OR ENGINEER.
NOTE 2:	TESTING MUST BE PERFORMED BY AN APPROVED INDEPENDENT TESTING LABORATORY RETAINED BY THE OWNER.
NOTE 3:	IN ADDITION TO IN-PLACE DENSITY TESTING, THE SUB-GRADE AND BASE ROCK SHALL BE PROOF-ROLLED WITH A LOADED DUMP TRUCK OR HEAVY NON-VIBRATORY ROLLER. SOILS SHALL BE REMOVED AND RE-COMPACTED OR REPLACED WITH APPROVED IMPORTED STRUCTURAL FILL IF THEY DO NOT DEMONSTRATE A FIRM, UNYIELDING CONDITION. BASEROCK PROOF-ROLL SHALL TAKE PLACE WITHIN 24 HOURS PRIOR TO PAVING AND SHALL BE WITNESSED BY THE ENGINEER OR GOVERNING AGENCY (LOCATION DEPENDENT).
NOTE 4:	THE APPROVED INDEPENDENT LABORATORY SHALL PROVIDE CERTIFICATION (STAMPED BY A ENGINEER LICENSED IN THE STATE OF OREGON) THAT THE SUB-GRADE WAS PREPARED AND ALL ENGINEERED FILLS WERE PLACED IN ACCORDANCE WITH THE CONTRACT DRAWINGS AND DOCUMENTS.

VICINITY MAP

SITE PLAN

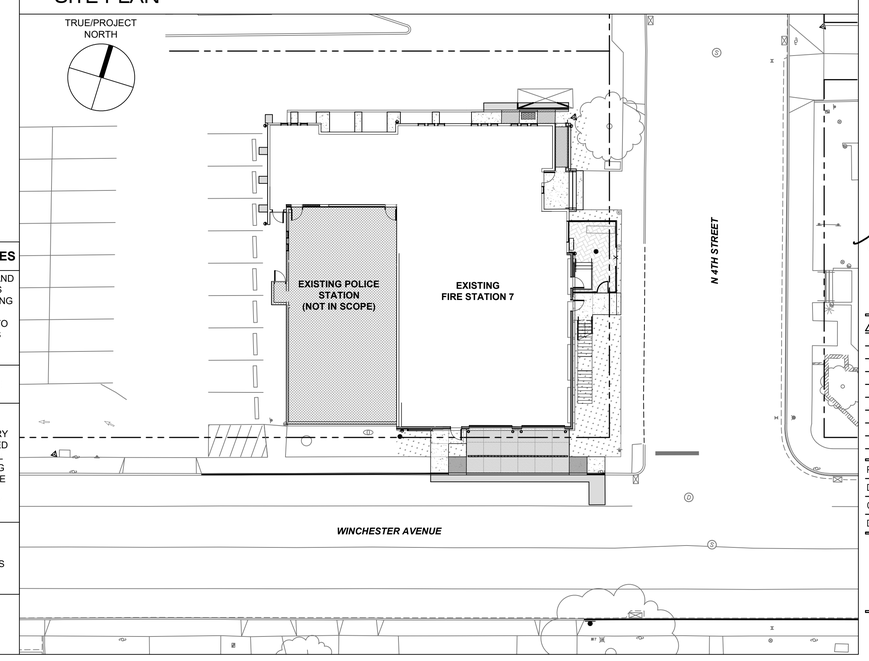

SHEET INDEX

C0.00 CIVIL COVER SHEET
C0.10 EROSION CONTROL NOTES
C0.20 LANDSCAPE NOTES
C1.00 EXISTING CONDITIONS, DEMOLITION, AND ESC PLAN
C2.00 CIVIL SITE PLAN
C3.00 GRADING AND DRAINAGE PLAN
C4.00 PRIVATE CIVIL DETAILS
C5.00 AGENCY STANDARD DETAILS
C5.10 AGENCY STANDARD DETAILS

PROJECT TEAM

OWNER
CITY OF REEDSPORT
CONTACT: DEANNA SCHAFER, CITY MANAGER
451 WINCHESTER AVE
REEDSPORT, OR 97467
(541) 271-3603

ENGINEER/ARCHITECT OF RECORD
ENGINEER: SYLAS E. ALLEN, PE
ARCHITECT: JACOB E. ZANDER, AIA
PROJECT MANAGER: MATTHEW CRAWFORD
ZCS ENGINEERING & ARCHITECTURE
127 NW D STREET
GRANTS PASS, OR 97526
(541) 479-3865

CM/GC
SCOTT PARTNEY CONSTRUCTION
598 CHAPPELL PKWY
NORTH BEND, OR 97459
(541) 756-7060

SURVEYOR
JOHN PARIANI, PLS
PARIANI LAND SURVEYING
17 S PLATT ST, SUITE C
EAGLE POINT, OR 97524
(541) 890-1131

GEOTECHNICAL ENGINEER
MELVIN J. McCRACKEN, PE, GE
CONTACT: MALLORY McADAMS
FOUNDATION ENGINEERING, INC
7857 SW CIRRUS DR, BLDG 24
BEAVERTON, OR 97008
(503) 643-1541

CITY UTILITY PROVIDER
CITY OF REEDSPORT PUBLIC WORKS
CONTACT: KIMBERLY CLARDY
451 WINCHESTER AVE
REEDSPORT, OR 97467
(541) 271-1988

POWER PROVIDER
CENTRAL LINCOLN PUD
440 FIR AVE
REEDSPORT, OR 97467
(877) 265-3211

ZCS ENGINEERING ARCHITECTURE
127 NW D Street, Grants Pass, Oregon 97526 | 541-479-3865

REEDSPORT FIRE DISTRICT
124 N 4TH ST.
REEDSPORT, OR 97467

REEDSPORT FIRE STATION 7

REGISTERED PROFESSIONAL ENGINEER — OREGON — Sept. 19, 2006 — SYLAS E. ALLEN — EXPIRES: 12-31-23

REVISION ID:	DATE:

PROJECT NO:	G-1468-21
DRAWN:	CMW
CHECKED:	MKW
DATE:	01-24-23

CIVIL COVER SHEET

C0.00

95% CONSTRUCTION DOCUMENTS | BID / PERMIT SET

STOCKPILE MANAGEMENT:

STOCKPILE MANAGEMENT PROCEDURES AND PRACTICES ARE DESIGNED TO REDUCE OR ELIMINATE AIR AND STORM WATER POLLUTION FROM STOCKPILES OF SOIL, SAND, AND PAVING MATERIALS SUCH AS PORTLAND CEMENT CONCRETE (PCC) RUBBLE, ASPHALT CONCRETE (AC), ASPHALT CONCRETE RUBBLE, AGGREGATE BASE, AGGREGATE SUB-BASE OR PRE-MIXED AGGREGATE, ASPHALT BINDER (SO CALLED "COLD MIX" ASPHALT) AND PRESSURE TREATED WOOD.

ALL STOCKPILES:

- IF FEASIBLE, LOCATE STOCKPILES A MINIMUM OF 50 FEET AWAY FROM INLETS, DRAINAGE COURSES, OR WATER BODIES.
- KEEP STOCKPILES ORGANIZED AND SURROUNDING AREAS CLEAN.
- PROTECT STORM DRAIN INLETS, DRAINAGE COURSES, AND RECEIVING WATERS FROM STOCKPILES, USING DRAIN INLET PROTECTION AND PERIMETER SEDIMENT CONTROLS AS APPROPRIATE.
- IMPLEMENT DUST CONTROL PRACTICES AS APPROPRIATE TO PREVENT WIND EROSION OF STOCKPILED MATERIAL.
- TEMPORARY STOCKPILES NOT REMOVED OR USED BY THE END OF ONE WORKDAY MUST BE MANAGED IN ACCORDANCE WITH THIS BMP AND IN ALL CASES PROTECTED PRIOR TO RAINFALL.

STOCKPILES OF SOIL, PORTLAND CEMENT, SAND, MULCH, CONCRETE RUBBLE, ASPHALT CONCRETE, ASPHALT CONCRETE RUBBLE, AGGREGATE BASE, OR AGGREGATE SUB-BASE:

- PROTECT STOCKPILES WITH A PERIMETER SEDIMENT BARRIER SUCH AS BERMS, SEDIMENT FENCES, FIBER ROLLS, SAND/GRAVEL BAGS, OR STRAW BALE BARRIERS YEAR ROUND.
- STOCKPILES SHOULD ADDITIONALLY BE COVERED OR STABILIZED AS NECESSARY DURING SIGNIFICANT FORECASTED STORM EVENTS (> 0.25 INCHES), PROLONGED PERIODS OF RAIN, AND TO PROTECT FROM WIND EROSION.
- SOIL STOCKPILES MAY BE RETURNED TO THE EXCAVATION IF RAIN IS FORECAST.
- TOPSOIL STOCKPILES SHOULD BE LOW N HEIGHT (IDEALLY <1 METER) AND FLAT AND BE USED WITHIN 6 MONTHS TO PROMOTE HEALTHY SOIL ORGANISMS AND MICROBES. STOCKPILES NOT USED WITHIN 6 MONTHS SHOULD BE RESEEDED WITH A SPECIES THAT IS MYCORRHIZAL DEPENDENT TO AVOID THE DEVELOPMENT OF ANAEROBIC CONDITIONS IN THE STOCKPILE.. IN ADDITION, TOPSOIL STOCKPILES CAN BE TURNED PERIODICALLY TO KEEP ORGANISMS ALIVE FOR LARGER STOCKPILES AND DURING EXTREMELY HOT WEATHER.

STOCKPILES OF "COLD MIX" OR OTHER POLLUTANTS EASILY TRANSPORTED IN STORM WATER (CEMENT, LIME, AND OTHER CAUSTIC AMENDMENTS):

- STOCKPILES SHALL BE PLACED ON PLASTIC OR COMPARABLE MATERIAL AT ALL TIMES.
- STOCKPILES SHALL BE COVERED WITH PLASTIC OR COMPARABLE MATERIAL PRIOR TO THE ONSET OF SIGNIFICANT RAIN (>0.10 INCHES).

BAGGED MATERIALS:

- BAGGED MATERIALS SHALL BE PLACED ON PALLETS AT ALL TIMES AND UNDER COVER (PLASTIC SHEETING, INDOORS, ETC.) PRIOR TO THE ONSET OF SIGNIFICANT RAIN (>0.10 INCHES).
- STOCKPILES/STORAGE OF PRESSURE TREATED WOOD WITH COPPER, CHROMIUM, AND ARSENIC OR AMMONIACAL COPPER, ZINC, AND ARSENATE:
- "STOCKPILES" OF TREATED WOOD SHALL BE COVERED WITH PLASTIC OR COMPARABLE MATERIAL PRIOR TO THE ONSET OF SIGNIFICANT RAIN (>0.25 INCHES).

INSPECTION AND MAINTENANCE:

- INSPECT STOCKPILES REGULARLY AND REPAIR AND/OR REPLACE COVERS, AND PERIMETER CONTROLS AS NEEDED.

DUST CONTROL NOTES:

THE GENERAL CONTRACTOR SHALL PROVIDE EXTRA MEASURES FOR DUST CONTROL. DUST CONTROL MEASURES MUST BE IMPLEMENTED TO PREVENT THE SOIL AND ATTACHED POLLUTANTS FROM LEAVING THE SITE. EXTRA MEASURES SHALL BE TAKEN WHERE EXPOSED SOIL IS LIKELY TO BE TRANSPORTED INTO OPEN BODIES OF WATER.

ACCEPTABLE DUST CONTROL MEASURES ARE AS FOLLOWS:

- WATERING
- VEGETATION
- SPRAY-ON ADHESIVES

IF VEGETATION IS THE METHOD TO BE USED:
THE GENERAL CONTRACTOR SHALL NOT CLEAR AND GRUB AREA'S NOT DIRECTLY AFFECTED BY THE CURRENT CONSTRUCTION. LEAVE ALL EXISTING VEGETATION IN PLACE AS TO PREVENT EROSION OF THE EXISTING SOIL BY WIND.

IF SPRAY-ON ADHESIVE IS THE METHOD TO BE USED:

TYPE OF EMULSION	WATER DILUTION	NOZZLE TYPE	APPLY (gal/acre)
ANIONIC ASPHALT	7:1	COARSE SPRAY	1,200
LATEX	12.5:1	FINE SPRAY	235
RESIN-IN-WATER	4:1	FINE SPRAY	300

SEEDING REQUIREMENTS:

TEMPORARY AND PERMANENT SEED MIX OF RESTORATION AND EROSION CONTROL AREAS SHALL BE HYDROSEEDED PER THE FOLLOWING:

1. SEED MIXTURE SHALL BE 'SUNMARK SEEDS - NATIVE E/C MIX' OR ENGINEER APPROVED EQUAL, CONSISTING OF THE FOLLOWING SPECIFICATIONS:
   - 40% MEADOW BARLEY
   - 35% CALIFORNIA BROME
   - 20% NATIVE RED FESCUE
   - 3% TUFTED HAIRGRASS
   - 2% SPIKE BENTGRASS
2. SEED SHALL BE APPLIED AT A RATE OF 44 POUNDS PER ACRE.
3. APPLY SEED TO ALL DISTURBED SURFACES PER THE ABOVE NOTES TO PROVIDE PERMANENT COVER. PROVIDE ADEQUATE MEASURES TO PREVENT EROSION & DOWNSTREAM SEDIMENT TRANSFER UNTIL PERMANENT COVER IS ESTABLISHED.

EROSION CONTROL INSPECTION AND MAINTENANCE:

1. ALL INSPECTIONS (SITE CONDITIONS AND FREQUENCIES) SHALL CONFORM TO THE 'INSPECTION FREQUENCY TABLE' ON THIS SHEET.
2. NEWLY SEEDED AREAS SHALL BE INSPECTED FREQUENTLY TO ENSURE THE GRASS IS GROWING. PROVIDE TEMPORARY IRRIGATION AS REQUIRED TO GERMINATE & ESTABLISH SEED. SEE SEEDING REQUIREMENTS FOR ADDITIONAL INFORMATION TYPICAL.
3. IF SEEDED AREAS ARE DAMAGED DUE TO RUNOFF, ADDITIONAL BMP's MAY BE NEEDED. RE-SEED DAMAGED AREAS IMMEDIATELY. SEE SEEDING REQUIREMENTS FOR ADDITIONAL INFORMATION TYPICAL.
4. REFER TO CURRENT OREGON/APWA STANDARD SPECIFICATIONS FOR ADDITIONAL REQUIREMENTS.

ONE INCH EQUALS FULL SCALE

CONCRETE MANAGEMENT:

CONCRETE TRUCKS AND TRANSFER CHUTES SHALL BE WASHED-OUT ON-SITE UTILIZING A CONCRETE WASHOUT TO COLLECT ALL WASH WATER AND CONCRETE WASTE. THE WASHOUT AREA WILL BE LOCATED AWAY FROM STORM DRAINS, OPEN DITCHES OR WATER BODIES. SIGNS WILL BE POSTED THROUGHOUT THE JOBSITE, DIRECTING CREWS AND CONCRETE TRUCKS TO CONCRETE WASHOUTS. UPON COMPLETION OF THE CONCRETE WORK, THE CONTRACTOR SHALL BREAK UP, REMOVE, AND HAUL AWAY OR REUSE ON SITE SOLID CONCRETE THAT HAS ACCUMULATED IN THE WASHOUT.

CONSTRUCTION SPECIFICATIONS:
MATERIAL USE:

- INSTALL STORM DRAIN PROTECTION AT ANY DOWN-GRADIENT INLETS THAT MAY BE IMPACTED BY THE ACTIVITY. SEE THE BMP ON "STORM DRAIN INLET PROTECTION."
- DO NOT PLACE CONCRETE DURING RAIN (PRECIPITATION THAT IS SUFFICIENT TO CAUSE LOCAL RUNOFF) OR WITHIN 18 HOURS OF FORECASTED RAIN.
- PLACE STOPPERS ON CONCRETE TRUCK CHUTES DURING TRAVEL ONSITE TO MANAGE POTENTIAL DRIBBLING OF CONCRETE MATERIAL.
- MINIMIZE AMOUNT OF CURING COMPOUND AND FORM OIL USED AND DO NOT OVERSPRAY ONTO A NON-TARGET SURFACE.
- SANDBLASTING: USE SHROUDS WHERE NECESSARY TO CONTAIN WASTE FROM SANDBLASTING. CONDUCT WORK IN ACCORDANCE WITH APPLICABLE AIR QUALITY STANDARDS. COLLECTED DEBRIS FOR PROPER DISPOSAL ASAP AND PRIOR TO RAIN EVENTS.
- MINIMIZE THE AMOUNT OF WATER USED DURING CORING/DRILLING OR SAW CUTTING. DURING WET CORING OR SAW CUTTING, USE A SHOVEL OR WET VACUUM TO LIFT THE COOLING WATER / SLURRY FROM THE PAVEMENT. ADDITIONALLY, IF WET VACUUMING IS NOT ADEQUATE TO CAPTURE WASTEWATER FROM THE ACTIVITY, SAND BAG BARRIERS OR OTHER CONTAINMENT SHALL BE USED.
- IF CONCRETE RESIDUE REMAINS AFTER DRYING, THE AREA SHALL BE SWEPT UP AND RESIDUE REMOVED TO AVOID CONTACT WITH STORM WATER OR ENTERING A STORM DRAIN OR WATER BODY VIA THE WIND.
- THE SWEEPINGS SHALL BE COLLECTED AND RETURNED TO THE AGGREGATE STOCKPILE OR DISPOSED IN THE TRASH AND NOT WASHED INTO THE STREET OR STORM DRAIN.
- WASHING OF FRESH CONCRETE SHALL BE AVOIDED, UNLESS RUNOFF CAN BE DRAINED TO A BERMED OR LEVEL AREA, AWAY FROM STORM DRAIN INLETS AND CHANNELS.
- ACID WASHING OF CONCRETE SHALL BE MINIMIZED. WHERE REQUIRED, ACID WASH SHALL BE DIRECTED INTO A COLLECTION AREA LINED WITH VISQUEEN. RESIDUALS SHALL BE COLLECTED AND PROPERLY DISPOSED OF AS HAZARDOUS WASTE.
- HANDLING OF WET CONCRETE, SUCH AS MOVING A PUMPER CHUTE OR TRANSPORTING MATERIAL IN A WHEELBARROW FROM THE DELIVERY TRUCK, MUST BE PERFORMED IN A CONTROLLED MANNER TO PREVENT DRIPS AND SPILLS OUTSIDE THE TARGET POUR AREA. MINIMIZE WATER USE.
- CONCRETE DRIPS, SPILLS, OVER POURS, AND EQUIPMENT RINSE WATER LANDING ON RAIN-EXPOSED OUTSIDE OF ANY BMP DEVICE MUST BE COLLECTED AND HAVE THE SURFACE CLEANED AND WASTE DISPOSED OF PROPERLY PRIOR TO THE END OF THE WORKDAY OR BEFORE THE NEXT RAIN EVENT. CONCRETE-LADEN EQUIPMENT IMPLEMENTS (E.G., CRANE BUCKETS) MUST BE STORED ON TOP OF HEAVY MIL PLASTIC UNTIL DRY. USED FORMS THAT ARE NOT IMMEDIATELY PLACED INTO A HAUL TRUCK WHEN REMOVED FROM FOUNDATIONS MUST ALSO BE TEMPORARILY STAGED OVER PLASTIC SHEETING OR AN EQUIVALENT UNTIL RINSED, WIPED, OR DRIED OR UNTIL HAULED OFFSITE.

WASTE MANAGEMENT:

- **DO NOT DISCHARGE CONCRETE RESIDUE OR PARTICULATE MATTER INTO A STORM DRAIN INLET OR WATERCOURSE.**
- EXCESS CONCRETE SHALL NOT BE DUMPED ON-SITE.
  THE FOLLOWING OPTIONS SHALL BE USED FOR CONCRETE TRUCK CHUTE AND/OR PUMP AND HOSE WASHOUT:
  CONCRETE WASHOUTS: WASHOUT STATIONS CAN BE A PLASTIC LINED TEMPORARY PIT OR BERMED AREA DESIGNED WITH SUFFICIENT VOLUME TO COMPLETELY CONTAIN ALL LIQUID AND WASTE CONCRETE MATERIALS PLUS ENOUGH CAPACITY FOR RAINWATER. THE DESIGNATED AREA SHALL BE LOCATED AWAY FROM STORM DRAIN INLETS, OR WATERCOURSES. NEW WASHOUTS SHALL BE CONSTRUCTED AS NEEDED TO PROVIDE SUFFICIENT. WASHOUT CAPACITY ON-SITE. WASTES OTHER THAN CONCRETE (I.E., TRASH, PAINT WASTES ETC.) SHALL NOT BE DISPOSED OF IN THE WASHOUT.

INSPECTION AND MAINTENANCE:

- RESPONSIBLE PERSONNEL SHALL ENSURE THAT ALL CONCRETE TRUCK DRIVERS ARE INSTRUCTED ABOUT PROJECT PRACTICES WHEN THE TRUCKS ARRIVE ON SITE.
- CLEAN OUT DESIGNATED WASHOUT AREAS AS NEEDED OR AT A MINIMUM WHEN THE WASHOUT IS 75 PERCENT FULL TO MAINTAIN SUFFICIENT CAPACITY THROUGHOUT THE PROJECT DURATION.
- ANY DESIGNATED ONSITE WASHOUT AREAS SHALL BE CLEANED OUT AND ALL DEBRIS REMOVED UPON PROJECT COMPLETION. DISPOSE OF CONCRETE WASTE ACCORDING TO THE BMP ON "SOLID WASTE MANAGEMENT."
  INSPECT ROUTINELY, WHEN APPLICABLE ACTIVITIES ARE UNDERWAY TO ENSURE THAT CONCRETE WASHOUT DOES NOT OVERFLOW AND THAT FREEBOARD IS ADEQUATE TO CONTAIN CONCRETE AND RAIN.

PAVING OPERATIONS MANAGEMENT:

IN ORDER TO REDUCE THE POTENTIAL FOR THE TRANSPORT OF POLLUTANTS IN STORM WATER RUNOFF FROM PAVING OPERATIONS, PAVING SHALL NOT TAKE PLACE WITHIN 72 HOURS OF A PREDICTED SIGNIFICANT (>0.10") STORM EVENT. IF PAVING DOES OCCUR WITHIN 72 HOURS OF A SIGNIFICANT STORM EVENT, CATCH BASIN FILTERS OR OTHER APPROPRIATE BMPS SHALL BE UTILIZED TO TRAP HYDROCARBONS.

CONSTRUCTION SPECIFICATIONS:

- PROTECT STORM DRAIN INLETS NEAR WORK AND DOWN GRADIENT OF WORK AREAS DURING SAW CUTTING, PAVING, OR GRINDING OPERATIONS.
- SAW-CUT SLURRY SHALL BE SHOVELED, VACUUMED AND REMOVED FROM SITE.
- PAVING MATERIALS AND MACHINERY SHALL BE STORED AWAY FROM STORM DRAINS AND WATER BODIES AND SECONDARY CONTAINMENT WILL BE USED TO CATCH DRIPS, LEAKS OR SPILLS WHERE APPLICABLE.
- IF ONSITE MIXING IS PLANNED THEN AN AREA SHALL BE DESIGNED FOR CONDUCTING THE MIXING. THIS AREA SHALL BE PAVED OR MADE IMPERVIOUS (E.G., PLASTIC OR WOOD SHEETING) AND BE LOCATED AWAY FROM STORM DRAIN INLETS OR WATERCOURSES.
- MINIMIZE OVERSPRAY OF TACKIFYING EMULSIONS OR PLACEMENT OF OTHER PAVING MATERIALS BEYOND THE LIMITS OF THE AREA TO BE PAVED.
- USE DRY METHODS TO CLEAN EQUIPMENT AND CONDUCT CLEANING IN ACCORDANCE WITH THE BMP ON "VEHICLE AND EQUIPMENT CLEANING."
- MATERIAL USE AND STOCKPILES SHALL BE MANAGED IN ACCORDANCE WITH BMPS ON "MATERIAL USE" AND "STOCKPILE MANAGEMENT."
- COLLECT AND REMOVE ALL BROKEN ASPHALT AND CONCRETE OR EXCESS MATERIALS. RECYCLE WHEN FEASIBLE AND DISPOSE OF MATERIALS IN ACCORDANCE WITH LOCAL, STATE, AND FEDERAL REQUIREMENTS.
- DO NOT APPLY ASPHALT, CONCRETE PAVING, SEAL COAT, TACK COAT, SLURRY SEAL OR FOG SEAL IF RAIN IS EXPECTED DURING THE APPLICATION OR CURING PERIOD.
- AVOID IF POSSIBLE, TRANSFERRING, LOADING, OR UNLOADING PAVING MATERIALS NEAR STORM DRAIN INLETS OR WATERCOURSES. IF NOT POSSIBLE, USE BMP ON STORM DRAIN INLET PROTECTION.

INSPECTION AND MAINTENANCE:

- INSPECT AND MAINTAIN EQUIPMENT AND MACHINERY ROUTINELY TO MINIMIZE LEAKS AND DRIPS.
- INSPECT INLET PROTECTION MEASURES ROUTINELY.

SPILL PREVENTION AND CONTROL PROCEDURES:

CONSTRUCTION SPECIFICATIONS:

- THE CONTRACTOR SHALL PREPARE A SITE/PROJECT SPECIFIC SPILL RESPONSE PLAN THAT IDENTIFIES THE TYPE AND LOCATION OF PRODUCTS OR WASTES ON THE SITE WITH SPILL POTENTIAL, THE LOCATION OF SPILL CLEANUP MATERIALS, STORM DRAINS OR SENSITIVE AREAS THAT REQUIRE IMMEDIATE RESPONSE, PERSONNEL RESPONSIBLE FOR SPILL RESPONSE AND NOTIFICATIONS, AND SPILL CLEANUP PROCEDURES.
- AVOIDING SPILLS AND LEAKS IS PREFERABLE TO CLEANING THEM UP AFTER THEY OCCUR. HEAVY EQUIPMENT (E.G., BULLDOZERS AND OTHER GRADING EQUIPMENT) AND VEHICLES SHOULD BE INSPECTED DAILY (OR AS OFTEN AS POSSIBLE) FOR LEAKS AND SHOULD BE REPAIRED AS NECESSARY. USE SECONDARY CONTAINMENT AND DRIP PANS FOR VEHICLE FUELING, MAINTENANCE, AND STORAGE (SEE BMP FOR "VEHICLE AND EQUIPMENT FUELING, MAINTENANCE, AND STORAGE."
- DESPITE PRECAUTIONS, SPILLS MAY STILL OCCUR AT THE SITE. SPILLS (OF LIQUID OR DRY MATERIALS) SHOULD NEVER BE CLEANED UP BY HOSING OFF THE AREA. IN THE EVENT THAT SPILLS OCCUR THEY SHOULD BE CONTROLLED AS FOLLOWS:
- ANY FUEL PRODUCTS, LUBRICATING FLUIDS, GREASE OR OTHER PRODUCTS AND/OR WASTE RELEASED FROM VEHICLES, EQUIPMENT, OR OPERATIONS SHALL BE COLLECTED AND DISPOSED OF IN ACCORDANCE WITH STATE, FEDERAL AND LOCAL LAWS.
- IF THE SPILL HAS OCCURRED DURING A RAIN EVENT, THE AREA WILL BE COVERED AS QUICKLY AS POSSIBLE. THE SPILL WILL BE CLEANED UP AS SOON AS POSSIBLE DURING OR AFTER CESSATION OF RAIN.
- SPILL CLEANUP MATERIALS WILL BE STORED NEAR POTENTIAL SPILL AREAS (E.G., PAINTING, VEHICLE MAINTENANCE AREAS).
- ***MINOR SPILLS:*** MINOR SPILLS TYPICALLY INVOLVE SMALL QUANTITIES OF OIL, GASOLINE, PAINT, ETC. THAT CAN BE CONTROLLED BY THE FIRST RESPONDER AT THE DISCOVERY OF THE SPILL. CONTROL OF MINOR SPILLS INVOLVES:
  1. CONTAIN THE SPILL IMMEDIATELY.
  2. RECOVER SPILLED MATERIALS (IF POSSIBLE).
  3. CLEAN THE CONTAMINATED AREA AND DISPOSE OF CONTAMINATED MATERIALS.

MEDIUM-SIZED SPILLS:

- MEDIUM-SIZED SPILLS STILL CAN BE CONTROLLED BY THE FIRST RESPONDER, ALONG WITH THE AID OF OTHER PERSONNEL SUCH AS LABORERS, FOREMEN, ETC. THIS RESPONSE MAY REQUIRE THE CESSATION OF OTHER ACTIVITIES. SPILLS SHOULD BE CLEANED UP IMMEDIATELY, AS FOLLOWS:

  1. NOTIFY THE PROJECT FOREMAN IMMEDIATELY. THE FOREMAN/SUPERINTENDENT IS RESPONSIBLE FOR ANY NECESSARY NOTIFICATIONS (FIRE DEPARTMENT ETC.).
  2. CONTAIN THE SPREAD OF THE SPILL (USING SAND BAGS OR OTHER BARRIERS) IMMEDIATELY.
  3. IF THE SPILL HAS OCCURRED ON A PAVED OR IMPERMEABLE SURFACE, CLEAN IT UP USING DRY METHODS (ABSORBENT MATERIALS, AT LITTER, AND/OR RAGS). CONTAIN THE SPILL BY ENCIRCLING IT WITH ABSORBENT MATERIALS.
  4. IF THE SPILL HAS OCCURRED ON AN UNPAVED OR PERMEABLE SURFACE, IMMEDIATELY CONTAIN THE SPILL BY CONSTRUCTING AN EARTHEN DIKE. DIG UP AND PROPERLY DISPOSE OF CONTAMINATED SOIL.
  5. IF THE SPILL HAS OCCURRED DURING A RAIN EVENT, COVER/CONTAIN THE AREA IF POSSIBLE.

SIGNIFICANT/HAZARDOUS SPILLS:

- FOR LARGE SPILLS OR SPILLS INVOLVING HAZARDOUS MATERIALS THAT CANNOT BE CONTROLLED BY PROJECT PERSONNEL, THE FOLLOWING STEPS SHOULD BE TAKEN:

  1. THE FOREMAN SHOULD NOTIFY THE PROJECT SUPERINTENDENT IMMEDIATELY AND FOLLOW UP WITH A WRITTEN INCIDENT REPORT.
  2. THE PROJECT SUPERINTENDENT WILL NOTIFY LOCAL EMERGENCY RESPONSE PERSONNEL BY DIALING 911. IN ADDITION, THE PROJECT SUPERINTENDENT WILL NOTIFY THE APPROPRIATE COUNTY OFFICIALS. IT IS THE PROJECT SUPERINTENDENT'S RESPONSIBILITY TO HAVE ALL OF THE EMERGENCY PHONE NUMBERS AT THE CONSTRUCTION SITE.
  3. THE PROJECT SUPERINTENDENT WILL ALSO NOTIFY THE OREGON DEQ.
  4. FOR SPILLS OF FEDERAL REPORTABLE QUANTITY (AS ESTABLISHED UNDER 40 CFR PARTS 110, 117, OR 302), THE PROJECT SUPERINTENDENT WILL NOTIFY THE NATIONAL RESPONSE CENTER BY TELEPHONE AT (800) 424-8802 WITHIN 24 HOURS. WITHIN 14 DAYS, THE PROJECT SUPERINTENDENT WILL SUBMIT A WRITTEN DESCRIPTION OF THE RELEASE TO EPA REGION 10, INCLUDING THE DATE AND CIRCUMSTANCES OF THE INCIDENT AND STEPS TAKEN TO PREVENT ANOTHER RELEASE.
  5. RETAIN THE SERVICES OF A SPILL CLEANUP CONTRACTOR OR HAZMAT TEAM IMMEDIATELY. CONSTRUCTION PERSONNEL SHOULD NOT ATTEMPT TO CLEAN UP THE SPILL UNTIL THE APPROPRIATE AND QUALIFIED STAFF HAS ARRIVED AT THE SITE.
  6. OTHER AGENCIES THAT MAY NEED TO BE CONTACTED INCLUDE THE LOCAL FIRE DEPARTMENT, OREGON DEPARTMENT OF TRANSPORTATION, ETC.

INSPECTION AND MAINTENANCE:

- INSPECT WORK AND MATERIAL STORAGE AREAS ROUTINELY FOR ADEQUATE CONTAINMENT TO AVOID UNCONTROLLED RELEASES.

FINAL EROSION CONTROL SITE PREPARATION:

ALL DISTURBED SOIL AREAS, INCLUDING R.O.W., SHALL BE TREATED AND SEEDED PER THE FOLLOWING NOTES. SEED COMPOSITION SHALL CONSIST OF A NATIVE GRASS BLEND MATCHING SURROUNDING AREA. GRASS SEED MIXTURE TO BE SUBMITTED FOR REVIEW PRIOR TO APPLICATION.

1. ALL FINAL GRADE PREPARATION AND PLANTING/SEEDING SHALL BE COORDINATED WITH THE PROJECT LANDSCAPER AND ENGINEER AT TIME OF CONSTRUCTION.
2. BRING ALL PLANTERBED/SEEDBED AREAS TO FINAL GRADE, REMOVE ALL ROCKS AND DEBRIS, AND SMOOTH SURFACE UNDULATIONS LARGER THAN 2 INCHES.
3. DIVERT CONCENTRATED FLOWS AWAY FROM THE PLANTER/SEEDED AREAS.
4. FOR OPTIMUM PLANTING/SEEDING CONDITIONS PRESERVE TOPSOIL AND STOCKPILE MATERIAL UNTIL FINAL GRADES ARE ESTABLISHED. SPREAD TOP SOIL OVER NEW GRADES. SEE PROJECT LANDSCAPER FOR ADDITIONAL INFORMATION RELATED TO TOPSOIL REQUIREMENTS.
5. ROUGHEN THE SOIL BY HARROWING,TRACKING, GROOVING OR FURROWING.
6. THE SEEDBED SHOULD BE FIRM BUT NOT COMPACT. THE TOP 4.0-6.0 INCHES OF SOIL SHOULD BE LOOSE, MOIST AND FREE OF LARGE CLODS AND STONES. VERIFY TOPSOIL REQUIREMENTS WITH LANDSCAPER AT TIME OF CONSTRUCTION.
7. HARROWING, TRACKING OR FURROWING SHOULD BE DONE HORIZONTALLY ACROSS THE FACE OF THE SLOPE, SO RIDGES ARE ALONG THE SLOPE CONTOUR.
8. APPLY SEED AT THE RATES SPECIFIED BY SEED SUPPLIER USING CALIBRATED SEED SPREADERS, CYCLONE SEEDERS, MECHANICAL DRILLS, OR HYDROSEEDER SO THAT SEED IS APPLIED UNIFORMLY ON THE SITE. SEE SEEDING REQUIREMENTS FOR ADDITIONAL INFORMATION TYPICAL.
9. BROADCAST SEED SHOULD BE INCORPORATED INTO THE SOIL BY RAKING OR CHAIN DRAGGING AND THEN LIGHTLY COMPACTED TO PROVIDE GOOD SEED-SOIL CONTACT. SEE SEEDING REQUIREMENTS FOR ADDITIONAL INFORMATION TYPICAL.
10. TO PREVENT SEED FROM BEING WASHED AWAY, CONFIRM INSTALLATION OF ALL REQUIRED SURFACE WATER CONTROL MEASURES.
11. DOUBLE THE RATE OF SEED APPLICATION WHEN SEED IS APPLIED IN A SINGLE APPLICATION. SEE SEEDING REQUIREMENTS FOR ADDITIONAL INFORMATION TYPICAL.

DEWATERING AND PONDED WATER MANAGEMENT:

DEWATERING AND PONDED WATER MANAGEMENT APPLIES TO AREAS WHERE STORM WATER HAS COLLECTED IN LOW SPOTS, TRENCHES OR OTHER DEPRESSIONS AND NEEDS TO BE REMOVED TO PROCEED WITH CONSTRUCTION ACTIVITIES OR FOR VECTOR CONTROL. ALL DEWATERING DISCHARGE ACTIVITIES MUST BE CONDUCTED IN ACCORDANCE WITH LOCAL AGENCY (I.E., LOCAL SEWERAGE AGENCY OR OTHER APPLICABLE AGENCY) PERMIT REQUIREMENTS.

CONSTRUCTION SPECIFICATIONS:

- PONDED STORM WATER SHALL BE SETTLED OR FILTERED FOR SEDIMENT REMOVAL PRIOR TO DISCHARGE.
- WATER FROM TRENCH OR EXCAVATION DEWATERING SHALL BE TESTED IF REQUIRED BY APPLICABLE PERMITS AND DISCHARGED IN ACCORDANCE WITH PERMIT PROVISIONS.
- FOR CLEAN PONDED STORM WATER, DEWATERING DISCHARGES (WITHOUT PERMIT REQUIREMENTS), AND AUTHORIZEDNON-STORM WATER DISCHARGES, USE ONE OF THE FOLLOWING METHODS FOR DISCHARGE / DISPOSAL AS ALLOWABLE BY LOCAL REQUIREMENTS / AGENCIES AND APPROVED BY THE PROJECT SUPERINTENDENT. WATER SHALL BE CLEAN AND FREE OF SIGNIFICANT SEDIMENT, SURFACTANTS, OR OTHER POLLUTANTS.
- REDUCE SEDIMENT DISCHARGE BY PUMPING WATER FROM THE TOP OF PONDED AREAS USING A FLOATING OR RAISED HOSE.
- USE WATER WHERE POSSIBLE FOR CONSTRUCTION ACTIVITIES SUCH AS COMPACTION AND DUST CONTROL AND LANDSCAPE IRRIGATION. IF USED FOR THESE APPLICATIONS, ENSURE THAT THE WATER WILL INFILTRATE AND NOT RUN-OFF FROM THE LAND TO STORM DRAIN SYSTEMS, TO CREEK BEDS (EVEN IF DRY) OR TO RECEIVING WATERS.
- INFILTRATE TO AN APPROPRIATE LANDSCAPED, VEGETATED OR SOIL AREA. NOTE: INFILTRATION MAY BE PROHIBITED IN ACCORDANCE WITH LOCAL REQUIREMENTS.
- DISCHARGE TO AN ON-SITE TEMPORARY SEDIMENT POND.
- DISCHARGE TO THE STORM DRAIN SYSTEM. WATER FROM DEWATERING MUST NOT CONTAIN SIGNIFICANT SEDIMENTS OR OTHER POLLUTANTS AND DISCHARGE MUST BE IN ACCORDANCE WITH LOCAL PERMITS.
- IF A PERMIT IS REQUIRED, PROVIDE TEMPORARY ONSITE STORAGE (BAKER TANKS, ETC.) OF WATER REMOVED FROM TRENCHES, EXCAVATIONS, ETC., UNTIL A PERMIT TO DISCHARGE IS OBTAINED.
- IF A PERMIT IS OBTAINED FOR DISCHARGE TO A STORM DRAIN OR SANITARY SEWER SYSTEM, CONDUCT ALL DEWATERING DISCHARGE ACTIVITIES IN ACCORDANCE WITH PERMIT REQUIREMENTS.

INSPECTION AND MAINTENANCE:

- INSPECT PUMPS, HOSES AND ALL EQUIPMENT BEFORE USE. MONITOR DEWATERING OPERATIONS TO ENSURE IT DOES NOT CAUSE OFFSITE DISCHARGE OR EROSION.
- INSPECT ROUTINELY, WHEN APPLICABLE ACTIVITIES ARE UNDER WAY.

VEHICLE AND EQUIPMENT FUELING, MAINTENANCE, AND STORAGE MANAGEMENT:

VEHICLES AND HEAVY MACHINERY ARE A POTENTIAL SOURCE OF POLLUTANTS SUCH AS PETROLEUM PRODUCTS, ANTIFREEZE, AND EXHAUST AND WASTE OIL CONTAINING HEAVY METALS. POLLUTANTS MAY ENTER STORM WATER RUNOFF BY MEANS OF DIRECT CONTACT WITH MACHINE PORTS AND BY CONTACT WITH SPILLS ON SURFACES AND THE GROUND. THE FOLLOWING CONTROL MEASURES CAN HELP PREVENT CONTACT OF THESE POTENTIAL POLLUTANTS WITH STORM WATER AND GROUND SURFACES.

CONSTRUCTION SPECIFICATIONS:

FUELING - ON SITE VEHICLE AND EQUIPMENT FUELING SHOULD ONLY BE USED WHERE IT IS IMPRACTICAL TO SEND VEHICLES AND EQUIPMENT OFFSITE FOR FUELING. WHEN FUELING MUST OCCUR ON SITE, THE CONTRACTOR SHALL SELECT AND DESIGNATE AN AREA TO BE USED, SUBJECT TO APPROVAL. VEHICLE AND EQUIPMENT FUELING (INCLUDING FUELING OF HANDHELD EQUIPMENT) SHALL BE CONDUCTED IN ACCORDANCE WITH THE FOLLOWING:

- AWAY FROM STORM DRAIN INLETS, DRAINAGE FACILITIES, OR WATERCOURSES.
- ON A PAVED SURFACE WHERE PRACTICAL.
- WITHIN A BERMED AREA TO PREVENT RUN-ON, RUNOFF, AND TO CONTAIN SPILLS.
- STORE PORTABLE FUEL CONTAINERS FOR HAND HELD EQUIPMENT IN A TUB OR EQUIVALENT DEVICE TO AVOID SPILLS AND LEAKS.
- USE SECONDARY CONTAINMENT TECHNIQUES FOR FUELING OF HANDHELD OR PORTABLE EQUIPMENT, SUCH AS DRAIN PANS OR DROP CLOTHS TO CATCH SPILLS OR LEAKS.
- ALL FUELING SHALL BE CONDUCTED WITH THE FUELING OPERATOR IN ATTENDANCE AT ALL TIMES.
- USE VAPOR RECOVERY NOZZLES TO HELP CONTROL DRIPS AND REDUCE AIR POLLUTION AND NOZZLES EQUIPPED WITH AUTOMATIC SHUTOFF FEATURES TO PREVENT OVERTOPPING FUEL TANK.
- SIGNAGE THAT FUEL TANKS SHOULD NOT BE "TOPPED OFF."
- AN ADEQUATE SUPPLY OF SPILL CLEAN UP MATERIALS SHALL BE READILY ACCESSIBLE TO ALL FUELING ACTIVITIES.

MAINTENANCE - MAINTENANCE OF LARGE EQUIPMENT SHALL BE CONDUCTED WITHIN DESIGNATED MAINTENANCE YARDS IN ORDER TO ENABLE CAREFUL MANAGEMENT. DURING MINOR ROUTINE MAINTENANCE, DRIP PANS SHALL BE PLACED UNDER VEHICLES AND EQUIPMENT. ALL ON SITE VEHICLES SHALL BE MONITORED FOR LEAKS AND SHALL RECEIVE PREVENTIVE MAINTENANCE TO REDUCE LEAKAGE.

ONLY NECESSARY MAINTENANCE REQUIRED FOR THE PROPER FUNCTIONING OF HANDHELD EQUIPMENT AND PORTABLE GENERATORS/COMPRESSORS IS ALLOWED ONSITE. DROP CLOTHES, TRAYS OR AN EQUIVALENT METHOD SHALL BE USED UNDERNEATH HANDHELD AND PORTABLE EQUIPMENT TO AVOID LEAKING FLUIDS, FUELS, OILS, OR GREASE ONTO THE GROUND. DO NOT OVERSPRAY AEROSOLS TO THE GROUND OR OTHER RAIN-EXPOSED SURFACES. CLEAN UP SPILLS IMMEDIATELY AND DISPOSE OF WASTE PROPERLY.

FUEL AND VEHICLE STORAGE - FUEL STORAGE SHALL BE CONDUCTED IN ACCORDANCE WITH APPLICABLE LOCAL, STATE,AND FEDERAL REGULATIONS AND IN ACCORDANCE WITH THE BMP FOR "HAZARDOUS MATERIALS AND WASTE MANAGEMENT." VEHICLES AND EQUIPMENT SHALL BE STORED IN DESIGNATED, BERMED VEHICLE STORAGE AREAS (SUCH AS DEDICATED STORAGE AREAS OR FUELING AND MAINTENANCE AREAS) WHEN POSSIBLE, OR OFF OF PAVED AREAS TO THE EXTENT PRACTICAL. DURING LONG PERIODS (TYPICALLY MORE THAN ONE MONTH) OF STORAGE, AND WHEN O

GENERAL LANDSCAPING NOTES:

WORK INCLUDED
1. PLACING EXISTING AND IMPORTED TOPSOIL IN LAWN AREAS.

2. PREPARING PLANTING SOIL MATERIALS AND AREAS TO BE PLANTED WITH LAWN AT LOCATIONS INDICATED ON THE DRAWINGS AND AS HEREIN SPECIFIED.

REFERENCES
1. DEFINITION OF NOXIOUS WEED: INCLUDES BLACKBERRY, CANADA THISTLE, DANDELION, HORSETAIL, MORNING GLORY, NUT SEDGE, POISON OAK, RUSH GRASS, ANNUAL BLUEGRASS, BERMUDA GRASS, BROME, CRABGRASS, JOHNSON GRASS, NUT GRASS, QUACK GRASS, AND OTHER NOXIOUS WEEDS AS DESIGNATED ON STATE OF OREGON DEPT. OF AGRICULTURE'S NOXIOUS WEED LIST.

QUALITY ASSURANCE
1. QUALIFICATIONS OF TOPSOIL:
   A. PRIOR TO DELIVERY OF IMPORTED TOPSOIL, SUBMIT WRITTEN STATEMENT GIVING LOCATION OF PROPERTY FROM WHICH TOPSOIL WILL BE OBTAINED.

2. REGULATORY REQUIREMENTS: MEET STATE OF OREGON LICENSING REQUIREMENTS FOR THE APPLICATION OF HERBICIDES.

3. PACKING AND SHIPPING: DELIVER COMMERCIAL FERTILIZER IN ORIGINAL CONTAINERS WITH LABELS INDICATING WEIGHT, CHEMICAL ANALYSIS AND NAME OF MANUFACTURER.

4. STORAGE AND PROTECTION:
   A. STORE FERTILIZERS AND AMENDMENTS IN DRY PLACE AND PROTECT FROM CONTAMINATION.

   B. PROTECT SOIL MATERIALS FROM DETERIORATION BY MOISTURE, EROSION, FREEZING TEMPERATURES, AND CHEMICAL CONTAMINATION DURING STORAGE AND HANDLING.

   C. PROTECT EXISTING AND NEW IMPROVEMENTS FROM DAMAGE AND STAINING.

   D. PROVIDE PROTECTIVE COVER AND BARRIERS AS NECESSARY TO PREVENT DAMAGE AND STAINING.

SITE CONDITIONS
1. ENVIRONMENTAL REQUIREMENTS: PREPARE SOIL ONLY WHEN TOPSOIL IS NOT IN A WET, MUDDY, OR FROZEN CONDITION.

2. COMPLETE SUB-GRADE PREPARATION PRIOR TO PLACING TOPSOIL (SEE SUBGRADE PREPARATION SECTION OF LANDSCAPE EXECUTION NOTES).

3. SCHEDULING: SCHEDULE PREPARATION OF AREAS TO BE SEEDED WITHIN 48 HOURS PRIOR TO APPLICATION OF SEED.

LANDSCAPING PRODUCT NOTES:

MATERIALS
1. EXISTING (ON-SITE) AND IMPORTED TOPSOIL:
   A. FERTILE, FRIABLE, NATURAL LOAM, SURFACE SOIL, CAPABLE OF SUSTAINING VIGOROUS PLANT GROWTH; POROUS AND FREE DRAINING; FREE OF SUBSOIL CLAY LUMPS, BRUSH, NOXIOUS WEEDS, WEED SEEDS, ROOTS, STONES LARGER THAN 1-1/2 INCHES IN ANY DIMENSION AND OTHER MATERIAL HARMFUL TO PLANT GROWTH.

   B. TOPSOIL SAMPLING AND ANALYSIS FROM A LICENSED SOILS LABORATORY IS RECOMMENDED PRIOR TO DELIVERY OR USE OF ANY TOPSOIL ON THE PROJECT SITE. SOIL SAMPLE SHALL BE A COMPOSITE ACQUIRED FROM FOUR DIFFERENT SECTIONS OF THE STOCKPILED SOIL OR FOUR DIFFERENT LOCATIONS ON THE SITE AT A DEPTH BETWEEN SIX AND TWELVE INCHES, FOR A TOTAL COMBINED QUANTITY OF ONE-HALF GALLON. SOIL TEST WOULD INCLUDE THE FOLLOWING: SIEVE ANALYSIS OF SOIL PARTICLE SIZE; MAGNESIUM, NITROGEN, PHOSPHOROUS, BORON, ZINC, AND POTASSIUM LEVELS; SOLUBLE SALT LEVEL; PH; ORGANIC MATTER; AND INFILTRATION RATE. TEST RESULTS WOULD INCLUDE SPECIFIC RECOMMENDATIONS FOR SOIL CONDITIONERS, AMENDMENTS AND FERTILIZERS TO ADJUST THE SOIL TO MEET THE DESCRIPTION NOTED ABOVE.

   C. ACCEPTABLE GRADATION AS DEFINED BY USDA TRIANGLE OF PHYSICAL CHARACTERISTICS AS MEASURED BY HYDROMETER:
      - SAND: 15 TO 60 PERCENT
      - SILT: 10 TO 60 PERCENT
      - CLAY: 5 TO 30 PERCENT

   D. ON-SITE OR IMPORTED EARTH FILL: APPROVED EXCAVATED EARTH FILL MATERIALS, FREE OF SUBSOIL CLAY LUMPS, BRUSH, WEEDS, ROOTS, STONES LARGER THAN 1-1/2 INCHES IN ANY DIMENSION AND OTHER MATERIAL HARMFUL TO PLANT GROWTH.

   E. LIME: DOLOMITE LIMESTONE, CALCIUM MAGNESIUM CARBONATE, 50% PASSING THROUGH A 100 MESH SIEVE, 95% TO 100% PASSING THROUGH A 20 MESH SIEVE, AGRICULTURAL GROUND GRADE, MINIMUM NEUTRALIZING VALUE OF 90%.

   F. COMPOST: 1/4-INCH MINUS FIR OR HEMLOCK SAWDUST AGED A MINIMUM OF 2 YEARS, OR APPROVED SUBSTITUTE.

   G. FERTILIZERS AND AMENDMENTS:
      - LAWN FERTILIZER: BEST FERTILIZER TRIPLE PRO 15-15-15, OR APPROVED EQUAL.

LANDSCAPE EXECUTION NOTES:

PERFORMANCE
1. SITE VERIFICATION OF CONDITIONS:
   A. EXAMINE SITE FOR CONDITIONS WHICH WILL ADVERSELY AFFECT EXECUTION, PERMANENCE, QUALITY OF WORK, AND SURVIVAL OF LAWN.

   B. VERIFY THAT GRADE AND SLOPES OF LAWN AREAS ARE ACCEPTABLE TO THE CIVIL ENGINEER AND OWNER PRIOR TO BEGINNING SOIL PREPARATION.

   C. REPORT EXISTING CONDITIONS DETRIMENTAL TO COMPLETION OF SOIL PREPARATION WORK.

   D. BEGIN WORK REQUIRED IN THIS SECTION ONLY AFTER CONDITIONS ARE SATISFACTORY.

   E. START OF WORK IN THIS SECTION DENOTES ACCEPTANCE OF EXISTING CONDITIONS.

2. PROTECTION OF EXISTING SITE:
   A. PROTECT UTILITY LINES AND SITE IMPROVEMENTS.

   B. STAKE LOCATION OF UNDERGROUND UTILITIES AND AVOID EXCAVATION IN THESE AREAS BEYOND SAFE LIMITS.

   C. HAND EXCAVATE WHERE REQUIRED TO AVOID UTILITY LINE DAMAGE.

SUBGRADE PREPARATION
1. REMOVAL OF MATERIALS DELETERIOUS TO PLANT GROWTH INCLUDING THE FOLLOWING:
   A. REMOVE ALL GRAVEL, AGGREGATE BASE ROCK MATERIAL, ASPHALT, CONCRETE, ROOTS OF ANY DEAD TREE OR TREE TO BE REMOVED, AND ALL CONSTRUCTION DEBRIS TO A MINIMUM DEPTH OF 12" INCHES BELOW FINISH GRADE FOR AREAS TO BE SEEDED.

   B. REPLACE WITH EARTH FILL, IF NECESSARY, TO BRING SUBGRADE TO CORRECT LEVELS PRIOR TO PLACING TOPSOIL.

2. SCARIFY SUBGRADE:
   A. FOR AREAS TO BE SEEDED, SCARIFY SUBGRADE TO A DEPTH OF 6 INCHES IN TWO DIRECTIONS AT 90 DEGREES TO EACH OTHER, WHERE TOPSOIL IS SCHEDULED TO BE PLACED, TO ENSURE INTERFACING OF SUBSOIL AND TOPSOIL, AND TO ACHIEVE SPECIFIED COMPACTION DENSITY.

   B. REPEAT CULTIVATION AND SCARIFICATION PRIOR TO PLACING TOPSOIL PLANTING MIX IN PLANTING AREAS WHERE COMPACTION EXCEEDS 75% OF MAXIMUM DENSITY, AND WHERE SURFACE SOILS HAVE SEALED AND/OR FORMED A SOIL LENS INHIBITING DRAINAGE.

PREPARATION
1. STOCKPILING:
   A. STOCKPILE AND PROTECT EXISTING AND IMPORTED TOPSOIL ON SITE IN DESIGNATED LOCATION AS DIRECTED BY OWNER'S REPRESENTATIVE.

   B. DO NOT MIX OTHER EXCAVATED MATERIALS WITH STOCKPILES.

2. PREPARING AREAS TO BE SEEDED:
   A. PLACE 4" DEPTH OF TOPSOIL.

   B. APPLY ADDITIONAL SOIL AMENDMENTS AS REQUIRED BY SOIL TEST ANALYSIS AT THE RATE INDICATED BY THE ANALYSIS.

   C. TILL SOIL AMENDMENTS INTO TOPSOIL TO A MINIMUM DEPTH OF 4".

3. FINISH GRADING FOR AREAS TO BE SEEDED:
   A. REMOVE HIGH SPOTS AND FILL DEPRESSIONS.

   B. DRAG AND HAND RAKE LAWN AREAS TO PRODUCE SMOOTH, EVEN GRADES.

   C. MAINTAIN EXISTING GRADES AT LIMITS OF WORK.

   D. SLOPE TO GRADES ACCEPTABLE TO THE CIVIL ENGINEER AND OWNER.

   E. PROVIDE POSITIVE DRAINAGE AS SHOWN ON THE DRAWINGS.

   F. REMOVE GRAVEL AND STONES LARGER THAN 1".

   G. REMOVE OR BREAK UP SOIL CLODS LARGER THAN 1".

   H. REMOVE STICKS, TRASH, DEBRIS, AND MATERIAL DELETERIOUS TO PLANT LIFE.

COMPLETION
1. ADJUSTING AND CLEANING:
   A. RESTORE ERODED, SETTLED, OR COMPACTED SOIL TO SPECIFIED CONDITION PRIOR TO LANDSCAPE PLANTING AND SEEDING.

   B. REMOVE EXCESS TOPSOIL AND SOIL AMENDMENTS FROM ADJACENT PAVING, CURB, AND WALK SURFACES.

   C. PROVIDE PROTECTIVE COVER AND BARRIERS AS NECESSARY TO PREVENT DAMAGE AND STAINING.

   D. REMOVE DEBRIS, TOPSOIL, FERTILIZER, SOIL AMENDMENTS, AND SOIL MIXES FROM CURBS, WALKS, PAVING, AND OTHER IMPROVEMENT SURFACES DAILY.

   E. SWEEP AND HOSE DOWN CURB, PAVEMENT, AND WALK AREAS DAILY AS NECESSARY TO MAINTAIN CLEAN SURFACES.

LAWN SEEDING GENERAL NOTES:

SUBMITTALS
1. SUBMIT SEED VENDOR'S CERTIFIED STATEMENT OF ANALYSIS FOR GRASS SEED MIX.
   A. COMPLY WITH STANDARDS ESTABLISHED BY THE ASSOCIATION OF OFFICIAL SEED ANALYSTS.

   B. SEED SHALL HAVE A GUARANTEED MINIMUM GERMINATION RATE OF 80%.

   C. SEED MUST CONTAIN A MAXIMUM OF 1.0% TOTAL WEED SEED BY WEIGHT.

REGULATORY REQUIREMENTS
1. MEET STATE OF OREGON LICENSING REQUIREMENTS FOR THE APPLICATION OF HERBICIDES.

DELIVERY, STORAGE AND HANDLING
1. SEED AND OTHER PACKAGED MATERIALS: DELIVER PACKAGED MATERIALS IN ORIGINAL, UNOPENED CONTAINERS SHOWING WEIGHT, CERTIFIED ANALYSIS, NAME AND ADDRESS OF MANUFACTURER, AND INDICATION OF CONFORMANCE WITH STATE AND FEDERAL LAWS, AS APPLICABLE.

SITE CONDITIONS
1. ENVIRONMENTAL REQUIREMENTS:
   A. APPLY SEED WHEN WIND VELOCITY IS LESS THAN 5 MILES PER HOUR AT THE SITE.

   B. DO NOT PLANT LAWNS WHEN THE AIR TEMPERATURE IS BELOW 40ºF OR ABOVE 90ºF.

2. SCHEDULING:
   A. PERFORM SEEDING WORK AFTER SOIL PREPARATION, PLANTING, IRRIGATION, AND OTHER WORK AFFECTING GROUND SURFACE HAS BEEN COMPLETED.

   B. SEED LAWNS BETWEEN APRIL 15 AND OCTOBER 15, UNLESS OTHERWISE APPROVED BY THE OWNER.

   C. APPLY SEED WITHIN 4 HOURS AFTER FINAL PREPARATION OF SEEDING AREAS.

   D. IF APPROVED BY OWNER TO SEED AFTER OCTOBER 15, INCREASE GRASS SEED MIXTURE BY ONE POUND PER 1000 SQUARE FEET PER WEEK.

MAINTENANCE
1. POST-INSTALLATION MAINTENANCE TO BE PERFORMED BY OWNER. CONTRACTOR TO COORDINATE WITH OWNER FOR 1200-C PERMIT TERMINATION.

2. CONTRACTOR TO PROVIDE RECOMMENDATIONS TO OWNER FOR MAINTENANCE OF LAWN AREAS, INCLUDING BUT NOT LIMITED TO WATERING, WEEDING, AND RE-SEEDING PRACTICES.

QUALIFICATIONS
1. INSTALLER QUALIFICATIONS: THE LANDSCAPE CONSTRUCTION PROFESSIONAL AS DEFINED IN ORS 671.520 AND PERFORMING WORK UNDER THIS SECTION OF THE CONTRACT SHALL HOLD A VALID LANDSCAPE CONTRACTOR'S LICENSE IN ACCORDANCE WITH ORS 671.510 TO 671.760.

SEEDING MATERIAL NOTES:

FERTILIZER AND ACCESSORIES
1. MAINTENANCE FERTILIZER: BEST TURF GOLD 22-5-6, OR APPROVED EQUAL.

2. GRASS SEED:
   A. LOW-WATER LAWN MIX: "TEAM JR." THREE-WAY TURF TYPE TALL FESCUE BLEND BY SUNMARK SEEDS INTERNATIONAL, INC., OR APPROVED EQUAL.

   B. ALL LAWN SEED SHALL BE STATE OF OREGON DEPARTMENT OF AGRICULTURE CERTIFIED BLUE TAG SEED.

   C. INOCULATE ALL LAWN SEED BLENDS WITH MYCORRHIZAE ACCORDING TO THE MANUFACTURER'S RECOMMENDED APPLICATION RATE.

3. HYDRO MULCH:
   A. MATERIAL: VIRGIN WOOD CELLULOSE FIBER CONTAINING NO GROWTH OR GERMINATION INHIBITING FACTORS.

   B. APPLICATION METERING MATERIAL: GREEN DYE TO FACILITATE VISUAL METERING.

   C. PERFORMANCE CHARACTERISTICS: FORMS HOMOGENOUS SLURRY UPON AGITATION FOR RAPID AND EVEN DISPERSAL.

   D. ACCEPTABLE WOOD FIBER MULCHES: ECO-FIBER BY PROFILE PRODUCTS OR APPROVED EQUAL.

4. BINDER OR TACKIFIER: AGRITEK-PAM OR APPROVED EQUAL.

PESTICIDES AND HERBICIDES
1. GENERAL: PESTICIDE, REGISTERED AND APPROVED BY EPA, ACCEPTABLE TO AUTHORITIES HAVING JURISDICTION, AND OF TYPE RECOMMENDED BY MANUFACTURER FOR EACH SPECIFIC PROBLEM AND AS REQUIRED FOR PROJECT CONDITIONS AND APPLICATION. DO NOT USE RESTRICTED PESTICIDES UNLESS AUTHORIZED IN WRITING BY AUTHORITIES HAVING JURISDICTION.

2. POST-EMERGENT HERBICIDE (SELECTIVE AND NON-SELECTIVE): EFFECTIVE FOR CONTROLLING WEED GROWTH THAT HAS ALREADY GERMINATED.

EQUIPMENT
1. HYDRAULIC HYDRO-SEEDING EQUIPMENT: CONTINUOUS MIXING AND AGITATING ACTION TO MIX WATER, SEED, FERTILIZER, AND MULCH AND DISTRIBUTE THE MIXTURE ON LAWN AREAS.

2. TEMPORARY FENCE:
   A. POSTS: PRE-PAINTED 6' LONG STEEL TEE POSTS, OR ACCEPTED SUBSTITUTE.

   B. FENCE: 4' HIGH ORANGE PLASTIC SAFETY FENCE.

LANDSCAPE PERFORMANCE NOTES:

1. VERIFICATION OF CONDITIONS:
   A. INSPECT TOPSOIL IN NEW LAWN AREAS.

   B. VERIFY COMPLIANCE WITH REQUIRED SOIL PREPARATION, COMPACTION, GRADES, SLOPE TO DRAINS, AND COMPLETION OF UNDERGROUND UTILITY LINES IN LAWN AREAS.

   C. START OF LAWN PLANTING WORK INDICATES ACCEPTANCE OF SUBGRADE AND TOPSOIL CONDITIONS.

2. PROTECTION OF ADJACENT SURFACES PRIOR TO SEEDING. PROTECT EXISTING UTILITY SYSTEMS, PAVING, WALKS, CURBS, AND OTHER SITE IMPROVEMENTS FROM DAMAGE DURING SEEDING.

3. PROTECTION OF ADJACENT SURFACES PRIOR TO HYDRO-SEEDING: INSTALL 10 FEET MINIMUM WIDTH VAPOR RETARDER SHEET COVER AT PERIMETER OF HYDRO-SEEDING AREA TO PREVENT HYDRO-SEEDING DRIFT ON ADJACENT SURFACES.

4. SURFACE PREPARATION FOR SEEDING:
   A. REMOVE HARD OR SOFT TOPSOIL AREAS AND ADJUST GRADE OF TOPSOIL WHERE REQUIRED.

   B. LIGHTLY IRRIGATE DRY PLANTING SOIL.

   C. ALLOW TIME FOR FREE SURFACE WATER TO DRAIN PRIOR TO SEEDING.

5. HYDRO-SEEDING:
   A. SEED ALL NEW LAWN AREAS SHOWN ON DRAWINGS AND AREAS DISTURBED AS A RESULT OF CONSTRUCTION OPERATIONS.

   B. APPLY SEED, MULCH, FERTILIZER, AMENDMENTS, AND WATER UNIFORMLY IN ONE APPLICATION WITH HYDRAULIC EQUIPMENT TO PREPARED LAWN AREAS.

6. LOW-WATER LAWN MIX: APPLY APPROVED SEED MIX AT RATE SPECIFIED ON THE PLANS.

7. APPLY 70 POUNDS (DRY WEIGHT) WOOD FIBER MULCH FOR EACH 1,000 SQUARE FEET AND 2 POUNDS BINDER OR TACKIFIER FOR EACH 1,000 SQUARE FEET.

8. APPLY MIXTURE THROUGH A PRESSURE SPRAY DISTRIBUTION SYSTEM PROVIDING A CONTINUOUS, NON-FLUCTUATING DISCHARGE OF MIXTURE IN THE ABOVE QUANTITIES UNIFORMLY ON LAWN AREAS.

9. APPLY SEED AND MULCH MIXTURE USING A SWEEPING, HORIZONTAL MOTION OF SPRAY DISTRIBUTION SYSTEM.

10. DO NOT SEED WITHIN 2 FEET OF BASE OF TREES.

PESTICIDE AND HERBICIDE APPLICATION
1. APPLY PESTICIDES AND OTHER CHEMICAL PRODUCTS AND BIOLOGICAL CONTROL AGENTS IN ACCORDANCE WITH REQUIREMENTS OF AUTHORITIES HAVING JURISDICTION AND MANUFACTURER'S WRITTEN RECOMMENDATIONS. COORDINATE APPLICATIONS WITH OWNER'S OPERATIONS AND OTHERS IN PROXIMITY TO THE WORK. NOTIFY OWNER BEFORE EACH APPLICATION IS PERFORMED.

2. POST-EMERGENT HERBICIDES (SELECTIVE AND NON-SELECTIVE): APPLY IN ACCORDANCE WITH MANUFACTURER'S WRITTEN RECOMMENDATIONS AND ONLY AS NECESSARY TO TREAT ALREADY-GERMINATED WEEDS.

COMPLETION
1. ADJUSTING AND CLEANING:
   A. CONTRACTOR MAY ADJUST METHOD OF SEEDING APPLICATION ONLY WHEN WRITTEN REQUEST IS ACCEPTABLE TO THE OWNER.

   B. AT COMPLETION OF WORK IN EACH AREA, REMOVE DEBRIS, EQUIPMENT, AND SURPLUS MATERIALS.

   C. WASH WALKS, WALLS, AND PAVING AREAS ADJACENT TO LAWN AREAS TO COMPLETELY REMOVE SEED, MULCH, SOIL MATERIALS, AND STAINS FROM EXPOSED SURFACES.

2. INSTALLATION OF TEMPORARY FENCE:
   A. INSTALL TEMPORARY FENCE AT PERIMETER OF LAWN AREAS WHERE NECESSARY TO PROHIBIT PUBLIC ACCESS.

   B. INSTALL POSTS AT 10 FEET ON CENTER MAXIMUM, TO A MINIMUM DEPTH OF 18".

   C. KEEP FENCE ERECT AND TAUT AT ALL TIMES.

   D. REMOVE FENCE WHEN LAWN AREAS ARE ESTABLISHED AND ACCEPTED.

ZCS ENGINEERING ARCHITECTURE

127 NW D Street, Grants Pass,
Oregon 97526 | 541-479-3865

REEDSPORT FIRE DISTRICT
124 N 4TH ST.
REEDSPORT, OR 97467

REEDSPORT FIRE STATION 7

REGISTERED PROFESSIONAL ENGINEER
OREGON
JAN. 19, 2006
JESSE E. ALLEN
EXPIRES: 12-31-23

FOR INFORMATION ONLY

REVISION ID:	DATE:

PROJECT NO:	G-1468-21
DRAWN:	CMW
CHECKED:	MKW
DATE:	01-24-23

LANDSCAPE NOTES

C0.20

95% CONSTRUCTION DOCUMENTS | BID / PERMIT SET

ONE INCH EQUALS FULL SCALE

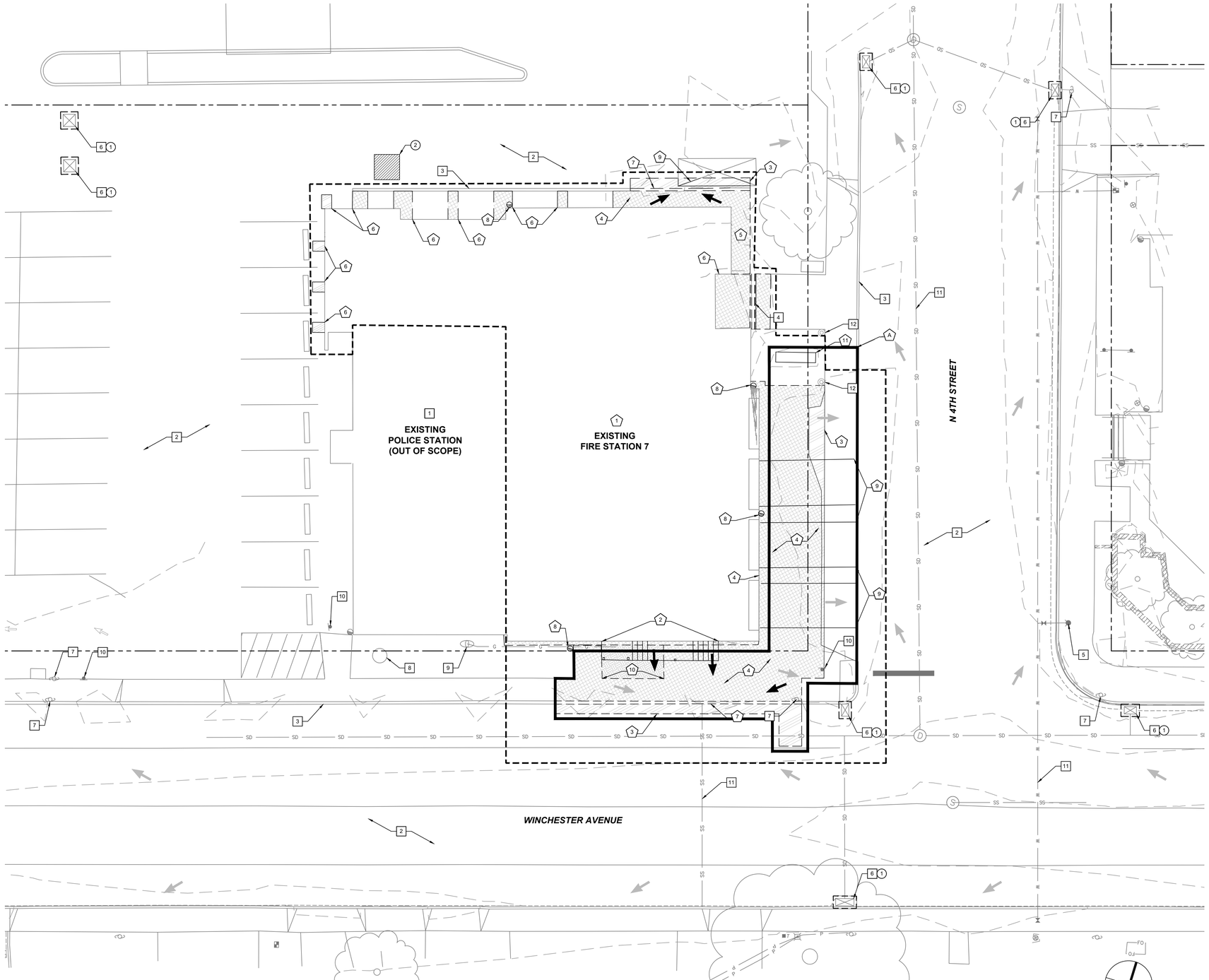

1 C1.00 **EXISTING CONDITIONS, DEMOLITION, AND EROSION CONTROL PLAN**

1"=10'

10 0 5 10 20

(FEET)

1 INCH = 10 FT

ONE INCH EQUALS FULL SCALE

DEMOLITION AND ESC LEGEND:

DEMOLITION LEGEND

- EXISTING ASPHALT PAVING TO BE REMOVED AND RECYCLED
- EXISTING CONCRETE TO BE REMOVED AND RECYCLED
- EXISTING CURB TO BE REMOVED

EROSION AND SEDIMENT CONTROL LEGEND

- CONCRETE TRUCK WASH OUT
- LIMITS OF WORK (±8,200 SF)
- INLET PROTECTION - CATCH BASIN
- EXISTING DRAINAGE FLOW DIRECTION
- NEW DRAINAGE FLOW DIRECTION

DEMOLITION / PROTECTION AND ESC NOTES:

GENERAL DEMOLITION AND PROTECTION NOTES:

***** CONTRACTOR SHALL FIELD VERIFY LIMITS OF ASPHALT/CONCRETE/ETC. DEMOLITION AND ADJUST AS REQUIRED.**

***** CONTRACTOR SHALL RECYCLE ALL MATERIALS, AS FEASIBLE.**

***** PROVIDE SMOOTH VERTICAL SAWCUT AT ALL EXTERIOR LIMITS OF ASPHALT/CONCRETE/ETC. REMOVAL.**

***** CONTRACTOR SHALL REPORT TO ENGINEER FOR DIRECTION IN EVENT OF DISCREPANCIES BETWEEN PLANS AND FIELD CONDITIONS.**

***** CONTRACTOR SHALL COORDINATE VEHICULAR AND PEDESTRIAN ACCESS REQUIREMENTS WITH OWNER PRIOR TO CONSTRUCTION.**

***** CONTRACTOR SHALL COORDINATE UTILITY SHUTOFF(S) WITH OWNER AND UTILITY PROVIDER 48 HOURS MINIMUM PRIOR TO CONSTRUCTION TO ENSURE MINIMAL SERVICE DISRUPTION DURING OPERATION HOURS.**

***** WHERE INDICATED, EXISTING STRUCTURES, HARDSCAPE, AND UTILITIES/APPURTENANCES SHALL BE PROTECTED THROUGHOUT ALL PHASES OF CONSTRUCTION.**

***** KEYNOTE (A) INDICATES ITEM IS PART OF REMODEL SCOPE OF WORK AND NOT SEISMIC RETROFIT RELATED. PROVIDE SEPARATE BIDS FOR REMODEL AND SEISMIC RETROFIT SCOPES OF WORK.**

DEMOLITION NOTES:

KEYNOTE (A) INDICATES ITEM IS PART OF REMODEL SCOPE OF WORK AND NOT SEISMIC RETROFIT RELATED. PROVIDE SEPARATE BIDS FOR REMODEL AND SEISMIC RETROFIT SCOPES OF WORK.

1. APPROXIMATE LIMITS OF EXISTING BUILDING TO UNDERGO MAJOR RENOVATION. REFER TO ARCHITECTURAL AND STRUCTURAL PLANS FOR ALL INFORMATION.
2. EXTERIOR WOODEN STAIR CONFIGURATION, HANDRAILS, COLUMNS, AND FOOTINGS TO BE REMOVED.
3. ASPHALT PARKING AND MANEUVERING AREAS TO BE REMOVED.
4. CONCRETE PAVEMENT AND/OR SIDEWALK TO BE REMOVED.
5. CONCRETE RAMP WITH HANDRAIL AND CHEEK WALL TO BE REMOVED.
6. APPROXIMATE LOCATION OF ASPHALT OR CONCRETE TO BE REMOVED TO FACILITATE PLACEMENT OF NEW PILES, TYPICAL. REFER TO STRUCTURAL PLANS FOR ALL INFORMATION.
7. CONCRETE CURB TO BE REMOVED.
8. DOWNSPOUT CONNECTION TO BE REMOVED AND REPLACED.
9. REMOVE STRIPING. CONTRACTOR MAY ELECT TO PAINT BLACK, GRIND DOWN, OR SANDBLAST PAVEMENT AS A MEANS OF REMOVAL.
10. PLANTER TO BE REMOVED.
11. MONUMENT SIGN TO BE REMOVED.

PROTECTION NOTES:

1. POLICE STATION PORTION OF BUILDING TO REMAIN, OUT OF SCOPE.
2. ASPHALT PARKING AND MANEUVERING AREA OR ROADWAY TO REMAIN.
3. CONCRETE SIDEWALK AND CURB TO REMAIN.
4. CONCRETE STAIRS TO REMAIN.
5. PUBLIC FIRE HYDRANT TO REMAIN.
6. CATCH BASIN TO REMAIN, TYPICAL.
7. OVERHEAD UTILITY POLE AND POWER/DATA SERVICES TO REMAIN.
8. TSUNAMI WARNING BEACON TO REMAIN.
9. PROPANE TANK AND ASSOCIATED PIPING TO REMAIN.
10. WAYFINDING SIGN TO REMAIN.
11. UNDERGROUND UTILITY TO REMAIN, TYPICAL.
12. EXISTING FLAGPOLE TO REMAIN.

GENERAL EROSION CONTROL NOTES:

*****THESE REQUIREMENTS SHALL BE CONSIDERED A MINIMUM. THE CONTRACTOR SHALL IMPLEMENT ADDITIONAL MEASURES AS REQUIRED TO FACILITATE CONSTRUCTION. ALL COSTS FOR EROSION CONTROL MEASURES SHALL BE BORN BY THE CONTRACTOR.**

*****THIS PLAN HAS BEEN PREPARED TO ADDRESS THE OVERALL PRIMARY EROSION CONTROL MEASURES THAT MUST BE IMPLEMENTED FOR CONSTRUCTION. IT SHALL BE THE RESPONSIBILITY OF THE CONTRACTOR TO ADJUST SPECIFIC EROSION CONTROL MEASURES TO ACCOMMODATE FOR ADDITIONAL PHASED CONSTRUCTION. ANY MODIFICATIONS TO THIS PLAN SHALL BE REVIEWED AND APPROVED BY THE AGENCIES HAVING JURISDICTION AND THE PROJECT ENGINEER PRIOR TO COMMENCEMENT OF WORK.**

EROSION AND SEDIMENT CONTROL NOTES:

1. FURNISH AND MAINTAIN 'TYPE 3' INLET PROTECTION PER ODOT RD1010 AT ALL ON-SITE CATCH BASINS.
2. FURNISH AND MAINTAIN CONCRETE TRUCK WASH OUT PER ODOT RD1070.

ZCS ENGINEERING ARCHITECTURE
127 NW D Street, Grants Pass, Oregon 97526 | 541-479-3865

REEDSPORT FIRE DISTRICT
124 N 4TH ST.
REEDSPORT, OR 97467

REEDSPORT FIRE STATION 7

REGISTERED PROFESSIONAL ENGINEER
OREGON
Sept. 19, 2006
MATHAS E. ALLEN
EXPIRES: 12-31-23

REVISION ID:	DATE:

PROJECT NO:	G-1468-21
DRAWN:	CMW
CHECKED:	MKW
DATE:	01-24-23

EXISTING CONDITIONS, DEMOLITION, AND ESC PLAN

C1.00

95% CONSTRUCTION DOCUMENTS | BID / PERMIT SET

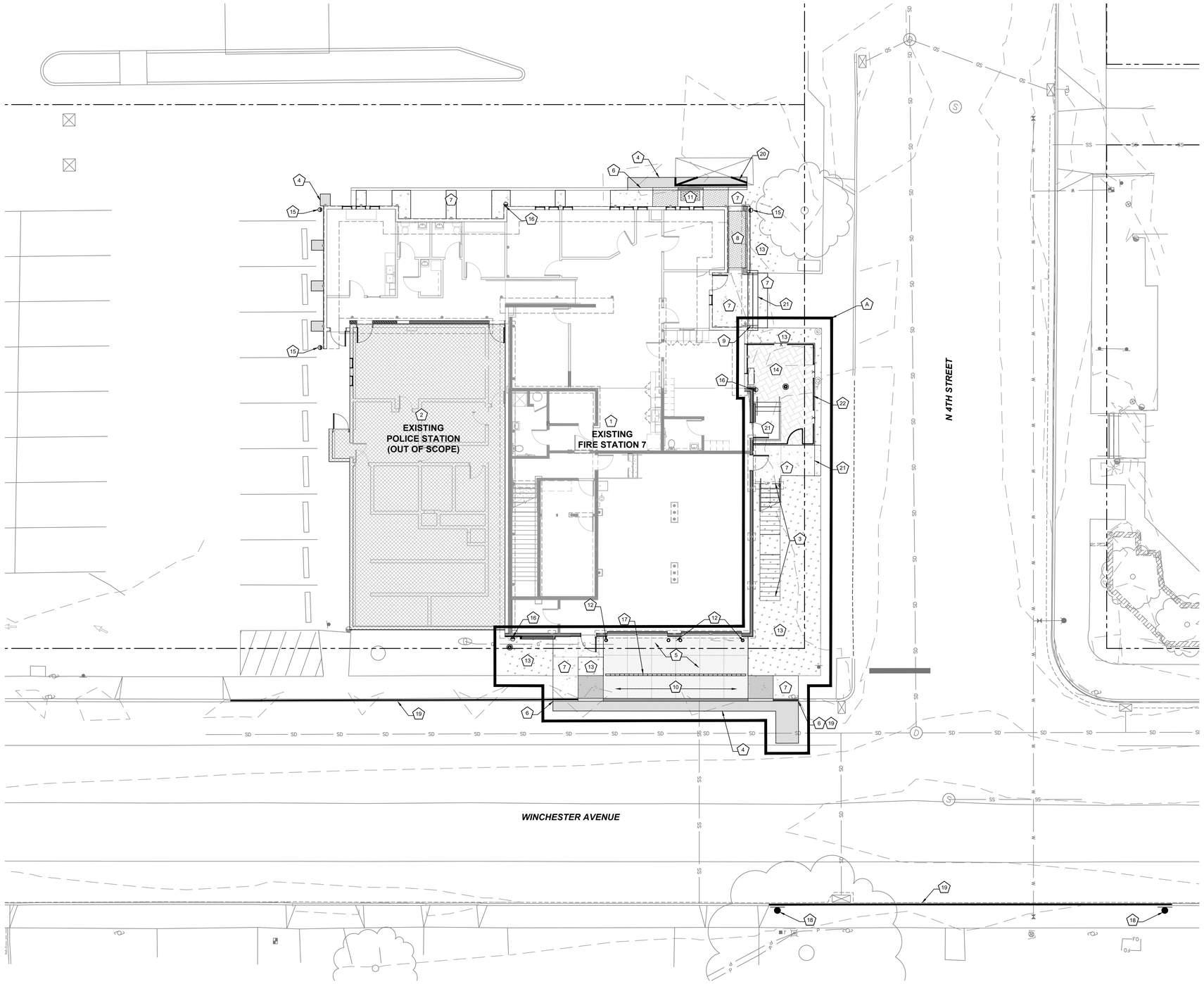

1 C2.00 **CIVIL SITE PLAN**

1"=10'

ONE INCH EQUALS FULL SCALE

CONSTRUCTION NOTES:

GENERAL CONSTRUCTION NOTES:

***** ALL CONCRETE/ASPHALT/GRAVEL PAVEMENT SECTIONS SHALL BE CONSTRUCTED OVER 'Propex' 'Geotex 200 ST' WOVEN PERMEABLE GEOTEXTILE SUPPORT FABRIC OVER HARD AND UNYIELDING SUBGRADE. REFER TO PROJECT GEOTECHNICAL REPORT AND SITE PREPARATION NOTES FOR ADDITIONAL INFORMATION REGARDING PAVEMENT AND SUBGRADE PREPARATION.**

***** TRANSITION BETWEEN NEW AND EXISTING ASPHALT/CONCRETE/CURB SHALL BE FLUSH AND FREE FROM ABRUPT CHANGES IN HEIGHT.**

***** CONSTRUCT PAVING, STRUCTURES, AND PIPING TO GRADES, ELEVATIONS, AND ALIGNMENTS SHOWN ON PLAN.**

***** PROVIDE SUBMITTALS TO ENGINEER FOR REVIEW AND APPROVAL PRIOR TO ORDERING MATERIALS.**

– *SITE CONSTRUCTION NOTES:*

A **KEYNOTE (A) INDICATES ITEM IS PART OF REMODEL SCOPE OF WORK AND NOT SEISMIC RETROFIT RELATED. PROVIDE SEPARATE BIDS FOR REMODEL AND SEISMIC RETROFIT SCOPES OF WORK.**

1. VERIFY LIMITS OF BUILDING FOOTPRINT WITH ARCHITECTURAL AND STRUCTURAL PLANS PRIOR TO CONSTRUCTION. NOTIFY ENGINEER IN THE EVENT OF DISCREPANCIES.
2. POLICE STATION. HATCHED AREA OUT OF SCOPE.
3. NEW EXTERIOR STAIR CONFIGURATION. REFER TO ARCHITECTURAL AND STRUCTURAL PLANS PRIOR TO CONSTRUCTION. NOTIFY ENGINEER IN THE EVENT OF DISCREPANCIES.
4. NEW HEAVY DUTY ASPHALT PAVEMENT, TYPICAL. REFER TO SHEET C3.00 FOR MORE INFORMATION.
5. NEW REINFORCED CONCRETE PAVEMENT. REFER TO SHEET C3.00 FOR MORE INFORMATION.
6. NEW STANDARD CONCRETE CURB. REFER TO SHEET C3.00 FOR MORE INFORMATION
7. NEW CONCRETE SIDEWALK, TYPICAL. REFER TO SHEET C3.00 FOR MORE INFORMATION.
8. NEW ACCESSIBLE RAMP WITH HANDRAIL AND CHEEK WALL. REFER TO SHEET C3.00 FOR MORE INFORMATION.
9. NEW HANDRAIL. REFER TO SHEET C3.00 FOR MORE INFORMATION.
10. NEW FULLY LOWERED REINFORCED CONCRETE DRIVEWAY APRON. REFER TO SHEET C3.00 FOR MORE INFORMATION.
11. NEW PARALLEL CURB RAMP. REFER TO SHEET C3.00 FOR MORE INFORMATION.
12. NEW CONCRETE BOLLARD. REFER TO DETAIL 1 ON SHEET C4.00 FOR MORE INFORMATION.
13. NEW LANDSCAPE PLANTER. REFER TO LANDSCAPE NOTES ON SHEET C0.02 FOR MORE INFORMATION AND COORDINATE WITH OWNER BEFORE PLANTING, TYPICAL.
14. NEW CONCRETE PAVERS. REFER TO SHEET C3.00 FOR MORE INFORMATION.
15. PROVIDE AND INSTALL CONCRETE SPLASH BLOCK AT DOWNSPOUT LOCATIONS APPROXIMATELY AS SHOWN (±3 TOTAL).
16. APPROXIMATE LOCATION OF NEW DOWNSPOUT CONNECTION. REFER TO ARCHITECTURAL PLANS FOR EXACT LOCATIONS. FURNISH AND INSTALL NEW DOWNSPOUT BOOT AND CLEANOUT SIMILAR TO DETAIL 5 ON SHEET C4.00.
17. NEW 'NDS' 'DURASLOPE' CHANNEL DRAIN (OR APPROVED EQUAL). REFER TO SHEET C3.00 FOR MORE INFORMATION.
18. FURNISH AND INSTALL 'NO PARKING' SIGN (MUTCD R7-1) AT LOCATION SHOWN.
19. PAINT CURB SOLID YELLOW WHERE INDICATED. DETERMINE EXACT LIMITS WITH TRAFFIC REPORT PREPARED BY 'SANDOW ENGINEERING'.
20. PAINT 4" SOLID WHITE STRIPING TO MATCH EXISTING.
21. NEW CONCRETE STAIR. REFER TO SHEET C3.00 FOR MORE INFORMATION.
22. NEW FENCE. REFER TO ARCHITECTURAL PLANS FOR ALL INFORMATION.

10 0 5 10 20

(FEET)

1 INCH = 10 FT

ZCS
ENGINEERING
ARCHITECTURE

127 NW D Street, Grants Pass,
Oregon 97526 | 541-479-3865

REEDSPORT FIRE DISTRICT
124 N 4TH ST.
REEDSPORT, OR 97467

REEDSPORT FIRE STATION 7

REGISTERED PROFESSIONAL ENGINEER
TROY E. SEIBY
OREGON
JAN. 19, 2016
TROY E. SEIBY
EXPIRES: 12-31-23

REVISION ID:	DATE:

PROJECT NO:	G-1468-21
DRAWN:	CMW
CHECKED:	MKW
DATE:	01-24-23

CIVIL
SITE PLAN

C2.00

95% CONSTRUCTION DOCUMENTS | BID / PERMIT SET

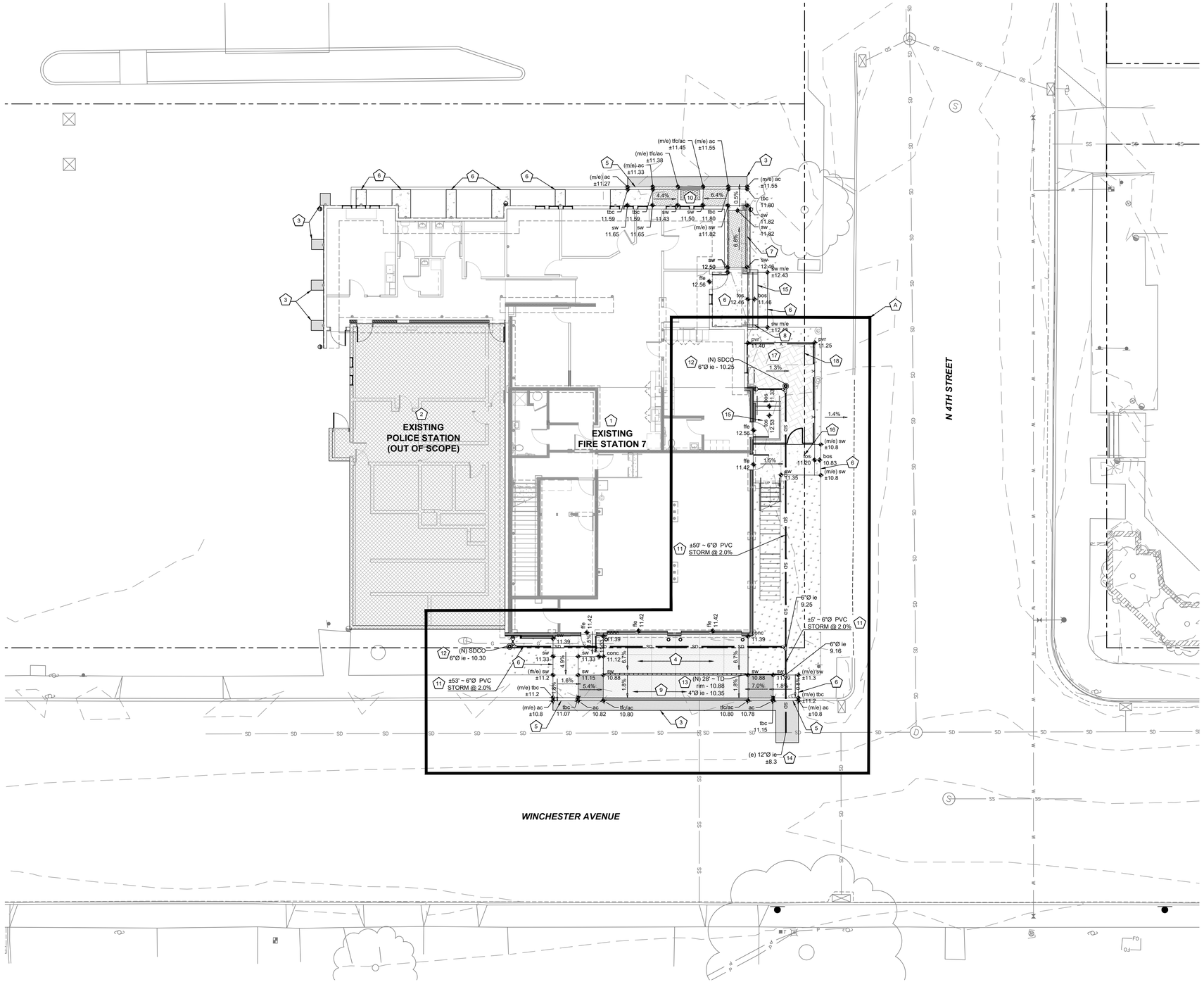

1 C3.00 **GRADING AND DRAINAGE PLAN**

1"=10'

CONSTRUCTION NOTES:

GENERAL CONSTRUCTION NOTES:

***** ALL CONCRETE/ASPHALT/GRAVEL PAVEMENT SECTIONS SHALL BE CONSTRUCTED OVER 'Propex' 'Geotex 200 ST' WOVEN PERMEABLE GEOTEXTILE SUPPORT FABRIC OVER HARD AND UNYIELDING SUBGRADE. REFER TO PROJECT GEOTECHNICAL REPORT AND SITE PREPARATION NOTES FOR ADDITIONAL INFORMATION REGARDING PAVEMENT AND SUBGRADE PREPARATION.**

***** TRANSITION BETWEEN NEW AND EXISTING ASPHALT/CONCRETE/CURB SHALL BE FLUSH AND FREE FROM ABRUPT CHANGES IN HEIGHT.**

***** CONSTRUCT PAVING, STRUCTURES, AND PIPING TO GRADES, ELEVATIONS, AND ALIGNMENTS SHOWN ON PLAN.**

***** PROVIDE SUBMITTALS TO ENGINEER FOR REVIEW AND APPROVAL PRIOR TO ORDERING MATERIALS.**

– *SITE CONSTRUCTION NOTES:*

A **KEYNOTE (A) INDICATES ITEM IS PART OF REMODEL SCOPE OF WORK AND NOT SEISMIC RETROFIT RELATED. PROVIDE SEPARATE BIDS FOR REMODEL AND SEISMIC RETROFIT SCOPES OF WORK.**

1. VERIFY LIMITS OF BUILDING FOOTPRINT WITH ARCHITECTURAL AND STRUCTURAL PLANS PRIOR TO CONSTRUCTION. NOTIFY ENGINEER IN THE EVENT OF DISCREPANCIES.
2. POLICE STATION. HATCHED AREA OUT OF SCOPE.
3. CONSTRUCT HEAVY DUTY ASPHALT PAVEMENT. MINIMUM SECTION CONSISTS OF 4" (2 LIFTS) OF ODOT LEVEL 2 ~ 1/2" DENSE ASPHALT WITH PG 64-22 BINDER OVER 12" MINIMUM 3/4" MINUS CRUSHED ROCK.
4. CONSTRUCT 8" THICK REINFORCED CONCRETE APPARATUS APPROACH APRON PER ODOT DET1610. INSTALL TURNDOWN EDGE AT LANDSCAPE TRANSITION. INSTALL GREASED 3/4"Ø X 24" LONG DOWEL BARS SPACED 24" O.C. ALONG TRANSITION TO BUILDING FOUNDATION. VERTICALLY CENTER BARS WITH 12" LENGTH IN BOTH FOUNDATION AND CONCRETE SECTION. EXTEND REINFORCEMENT AND TURNDOWN EDGE CONTINUOUSLY INTO SIDEWALK SECTIONS BETWEEN KEYED NOTES AS SHOWN.
5. CONSTRUCT STANDARD CONCRETE CURB PER ODOT RD700.
6. CONSTRUCT CONCRETE SIDEWALK PER ODOT RD720 AND RD722. SCORING PATTERN APPROXIMATELY AS SHOWN. SIDEWALK SLOPES AND GRADES PER PLAN. CONTRACTOR MAY ELECT TO CONSTRUCT MONOLITHIC CURB AND SIDEWALK IF APPROVED BY CITY.
7. CONSTRUCT ACCESSIBLE RAMP WITH HANDRAIL AND CHEEK WALL PER DETAILS 2 AND 3 ON SHEET C4.00. COORDINATE ACCESSIBLE RAMP WITH DETAILS IN STRUCTURAL PLANS PRIOR TO CONSTRUCTION.
8. NOT USED.
9. CONSTRUCT FULLY LOWERED REINFORCED CONCRETE DRIVEWAY APRON PER OPTION 'G' ON ODOT RD735. CONCRETE SECTION TO MATCH ODOT DET1610.
10. CONSTRUCT PARALLEL CURB RAMP PER ODOT RD920. CONCRETE SECTION TO MATCH ODOT RD720 AND RD722.
11. INSTALL 'PVC' STORM PIPE IN TRENCH PER DETAIL 7 ON SHEET C4.00. CONNECTIONS TO MAIN SHALL BE MADE USING PREFABRICATED 'WYE' FITTINGS.
12. FURNISH AND INSTALL CLEANOUT TO GRADE WITH WORD 'STORM' CAST INTO LID. CONSTRUCT PER DETAIL 9 ON SHEET C4.00.
13. FURNISH AND INSTALL 4" 'NDS' 'DURASLOPE' CHANNEL DRAIN (OR APPROVED EQUAL) WITH CLASS 'D' ADA COMPLIANT GRATE PER DETAIL 10 ON SHEET C4.00. DISCHARGE 4"Ø PVC PIPE TO ADJACENT NEW STORM PIPE.
14. CONNECT TO EXISTING STORM MAIN USING PRE-FABRICATED 'WYE' FITTINGS. CONTRACTOR TO VERIFY INVERT ELEVATION AND DIAMETER OF EXISTING STORM PIPE AND REPORT FINDINGS TO ENGINEER BEFORE CONSTRUCTION.
15. CONSTRUCT NEW CONCRETE STAIRS PER DETAIL 8 ON SHEET C4.00 WITH CONCRETE CHEEK WALL PER DETAIL 3 ON SHEET C4.00.
16. CONSTRUCT NEW SINGLE CONCRETE STAIR SIMILAR TO DETAIL 8 ON SHEET C4.00. NO HANDRAIL NECESSARY.
17. NEW 'WILLAMETTE GRAYSTONE' 'HOLLAND STONE' UNIT PAVER PATIO AREA AND DECORATIVE FENCE. REFER TO DETAIL 6 ON SHEET C4.00 FOR MORE INFORMATION ABOUT PAVERS.
18. APPROXIMATE ALIGNMENT OF NEW DECORATIVE FENCE. REFER TO ARCHITECTURAL PLANS FOR ALL INFORMATION.

10 0 5 10 20

(FEET)

1 INCH = 10 FT

ZCS ENGINEERING ARCHITECTURE

127 NW D Street, Grants Pass,
Oregon 97526 | 541-479-3865

REEDSPORT FIRE DISTRICT
124 N 4TH ST.
REEDSPORT, OR 97467

REEDSPORT FIRE STATION 7

REGISTERED PROFESSIONAL ENGINEER
70778PE
OREGON
Sept. 19, 2006
TYLAS E. ALLEN
EXPIRES: 12-31-23

△ REVISION ID:	DATE:

PROJECT NO:	G-1468-21
DRAWN:	CMW
CHECKED:	MKW
DATE:	01-24-23

GRADING AND DRAINAGE PLAN

C3.00

95% CONSTRUCTION DOCUMENTS | BID / PERMIT SET

ONE INCH EQUALS FULL SCALE

SUBMIT SHOP DRAWINGS FOR ENGINEER APPROVAL PRIOR TO CONSTRUCTION

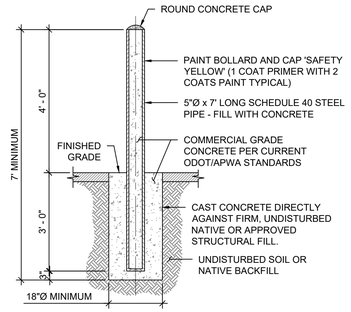

1 C4.00 STATIONARY BOLLARD DETAIL

NTS

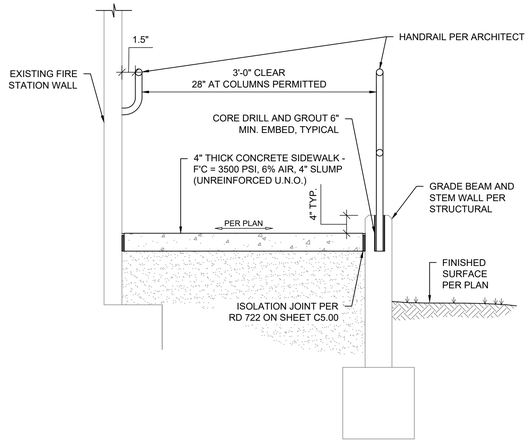

2 C4.00 BUILDING/WALL RAMP SECTION

NTS

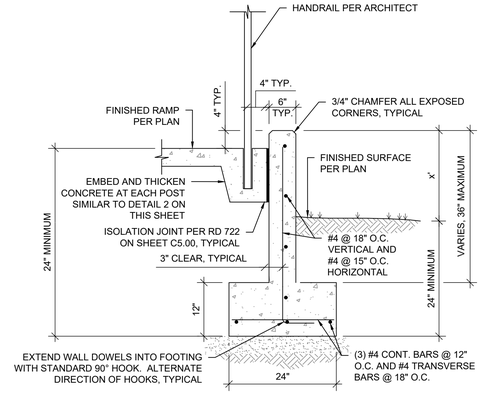

3 C4.00 TYPICAL CHEEK WALL SECTION

3/4" = 1'

4 C4.00 NOT USED

NTS

SUBMIT SHOP DRAWINGS FOR ENGINEER APPROVAL PRIOR TO CONSTRUCTION

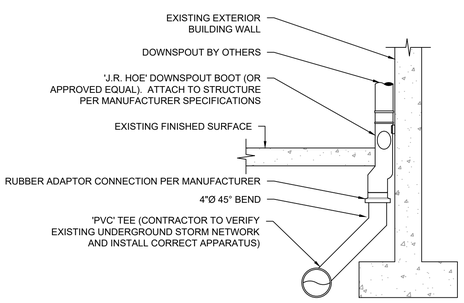

5 C4.00 TYPICAL DOWNSPOUT CONNECTION

NTS

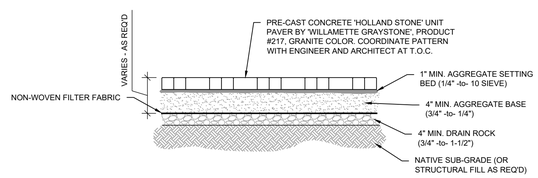

6 C4.00 TYPICAL PAVER SECTION

NTS

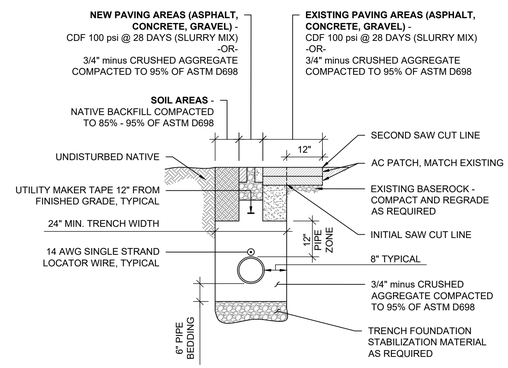

7 C4.00 TYPICAL PRIVATE WET UTILITY TRENCH SECTION

1/2" = 1'

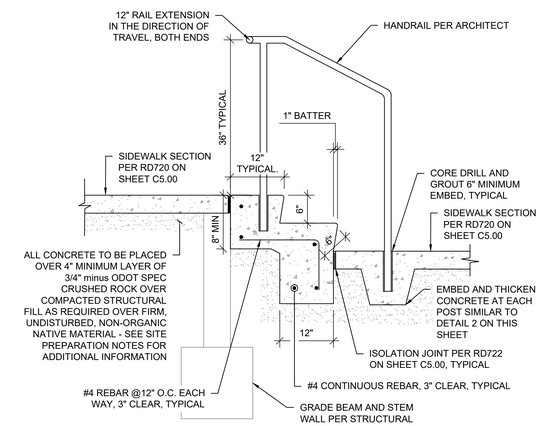

8 C4.00 TYPICAL STAIR SECTION

NTS

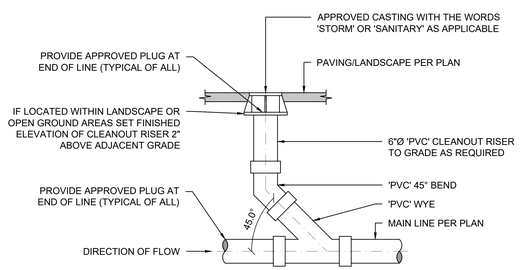

9 C4.00 TYPICAL PRIVATE CLEANOUT TO GRADE

NTS

ALL INSTALLATION SHALL CONFORM TO MANUFACTURER SPECIFICATIONS.

SUBMIT SHOP DRAWINGS FOR ENGINEER APPROVAL PRIOR TO CONSTRUCTION

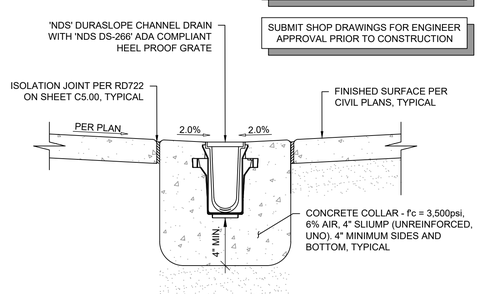

ALL CONCRETE TO BE PLACED OVER 4" MINIMUM LAYER OF 3/4" MINUS ODOT SPEC CRUSHED ROCK OVER COMPACTED STRUCTURAL FILL AS REQUIRED OVER FIRM, UNDISTURBED, NON-ORGANIC NATIVE MATERIAL - SEE SITE PREPARATION NOTES FOR ADDITIONAL INFORMATION

10 C4.00 TYPICAL TRENCH DRAIN SECTION

3/4" = 1'

THE FOLLOWING NOTES APPLY TO ALL PROJECT CONCRETE. CERTAIN NOTES MAY NOT BE APPLICABLE. CONTACT THE ENGINEER OF RECORD FOR CLARIFICATION AS REQUIRED:

1. ALL FLATWORK CONCRETE TO BE F'C = 3,500 PSI UNLESS NOTED OTHERWISE. ALL RETAINING WALL CONCRETE TO BE F'C = 4,000 PSI UNLESS NOTED OTHERWISE. PROVIDE STANDARD CONCRETE TESTING PUCKS FROM CONCRETE SUPPLIER.
2. ALL CONCRETE TO HAVE 6% (±1%) AIR ENTRAINMENT
3. PERFORM WORK IN ACCORDANCE WITH ACI 301 AND ACI 318. FOLLOW RECOMMENDATIONS OF ACI 305R WHEN CONCRETING DURING HOT WEATHER AND ACI 306R WHEN CONCRETING DURING COLD WEATHER. PLACE CONCRETE IN ACCORDANCE WITH ACI 304R. ENSURE REINFORCEMENT, INSERTS, EMBEDDED PARTS, FORMED JOINTS ARE NOT DISTURBED DURING CONCRETE PLACEMENT. PLACE CONCRETE CONTINUOUSLY OVER THE FULL WIDTH OF THE PANEL AND BETWEEN PREDETERMINED CONSTRUCTION JOINTS
4. ALL CONCRETE SHALL BE PLACED OVER 4" MINIMUM LAYER (UNLESS NOTED OTHERWISE) OF APPROVED 3/4" MINUS ODOT SPEC CRUSHED ROCK COMPACTED TO 95% AASHTO T-99 OVER APPROVED COMPACTED (ASTM D698) STRUCTURAL FILL AS REQUIRED FOR GRADE OVER FIRM, UNDISTURBED, NON-ORGANIC NATIVE MATERIAL. THE EXISTING SITE SHALL BE CLEARED AND GRUBBED OF ALL ORGANIC AND/OR EXPANSIVE MATERIAL PRIOR TO STRUCTURAL FILL IMPORT
5. ALL BACKFILL SHALL BE NON-ORGANIC, NON-EXPANSIVE GRANULAR MATERIAL COMPACTED TO 95% PROCTOR
6. REINFORCING STEEL SHALL CONFORM TO ASTM A 615/A 615M GRADE 60 (420); DEFORMED BILLET STEEL BARS; UNFINISHED FINISH. STEEL WELDED WIRE REINFORCEMENT SHALL BE PLAIN TYPE, ASTM A 185/A 185M; IN FLAT SHEETS; UNFINISHED. DOWELS SHALL CONFORM TO ASTM A 615/A 615M GRADE 40 (280); DEFORMED BILLET STEEL BARS; UNFINISHED FINISH. ALL TIE WIRE SHALL BE A MINIMUM OF #16 ANNEALED STEEL.
7. PLACE AND SECURE FORMS TO CORRECT LOCATION, DIMENSION, PROFILE, AND GRADIENT. ASSEMBLE FORMWORK TO PERMIT EASY STRIPPING AND DISMANTLING WITHOUT DAMAGING CONCRETE. PLACE JOINT FILLER VERTICAL IN POSITION, IN STRAIGHT LINES. SECURE TO FORMWORK DURING CONCRETE PLACEMENT. HOLD TOP OF PRE-MOLDED JOINT FILLER DOWN 1/2" AND SEAL UPPER 3/8" WITH APPROVED JOINT SEAL MATERIAL.
8. RETAINING WALLS TO BE AT MINIMUM 80% DESIGN STRENGTH AND 7 DAYS CURE PRIOR TO ANY BACKFILL PLACEMENT.
9. NO HORIZONTAL CONSTRUCTION JOINTS PERMITTED
10. MAXIMUM VARIATION OF SURFACE FLATNESS SHALL NOT EXCEED 1/4 INCH IN 10 FT AND MAXIMUM VARIATION FROM TRUE POSITION SHALL NOT EXCEED 1/4 INCH
11. IMMEDIATELY AFTER PLACEMENT, PROTECT PAVEMENT FROM PREMATURE DRYING, EXCESSIVE HOT OR COLD TEMPERATURES, AND MECHANICAL INJURY. DO NOT PERMIT PEDESTRIAN TRAFFIC OVER PAVEMENT FOR 7 DAYS MINIMUM AFTER FINISHING.
12. FINISH AS FOLLOWS:
    A. SIDEWALK PAVING: LIGHT BROOM, TEXTURE PERPENDICULAR TO DIRECTION OF TRAVEL WITH TROWELED AND RADIUSED EDGE 1/2 INCH RADIUS
    B. CURBS AND GUTTERS: LIGHT BROOM, TEXTURE PARALLEL TO DIRECTION OF FLOW
    C. RETAINING WALLS: SMOOTH RUBBED FINISH. WET CONCRETE AND RUB WITH CARBORUNDUM BRICK OR OTHER ABRASIVE, NOT MORE THAN 24 HOURS AFTER FORM REMOVAL. REPAIR/PLUG SURFACE DEFECTS, INCLUDING TIE HOLES, IMMEDIATELY AFTER REMOVING FORM WORK.
    D. PLACE CURING COMPOUND ON EXPOSED CONCRETE SURFACES IMMEDIATELY AFTER FINISHING. APPLY IN ACCORDANCE WITH MANUFACTURER'S INSTRUCTIONS.

11 C4.00 SPECIAL CONCRETE NOTES

ONE INCH EQUALS FULL SCALE

ZCS ENGINEERING ARCHITECTURE
127 NW D Street, Grants Pass, Oregon 97526 | 541-479-3865

REEDSPORT FIRE DISTRICT
124 N 4TH ST.
REEDSPORT, OR 97467

REEDSPORT FIRE STATION 7

REGISTERED PROFESSIONAL ENGINEER
TOTTLE
OREGON
Sept. 19, 2006
THOMAS E. ALLEN
EXPIRES: 12-31-23

REVISION ID:	DATE:

PROJECT NO:	G-1468-21
DRAWN:	CMW
CHECKED:	MKW
DATE:	01-24-23

PRIVATE CIVIL DETAILS

C4.00

95% CONSTRUCTION DOCUMENTS | BID / PERMIT SET

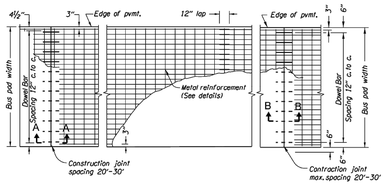

REINFORCED CONCRETE PAVEMENT

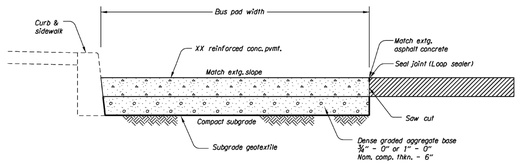

CONCRETE BUS PAD

Not to scale

NOTE:
1. Embedment depth of metal reinforcement is to top of longitudinal steel.
2. Place longitudinal bars of the metal reinforcement on top of transverse bars.
3. Use either construction joints or contraction joints at spacing J.

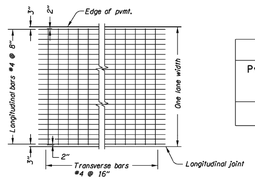

DEFORMED BARS
METAL REINFORCEMENT

PAVEMENT DETAILS	
Pvmt. Thkn. T (in)	Joint Spacing J (ft)
	20' - 30'

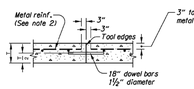

SECTION A-A
CONSTRUCTION JOINT

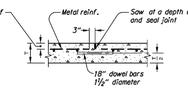

SECTION B-B
CONTRACTION JOINT

The selection and use of this detail, while designed in accordance with generally accepted engineering principles and practices, is the sole responsibility of the user and should not be used without consulting a Registered Professional Engineer.	OREGON DEPARTMENT OF TRANSPORTATION TECHNICAL SERVICES DETAILS	DETAIL NO.
	BUS PAD	DET1610

det1610.dgn 14-JAN-2016

DET1610

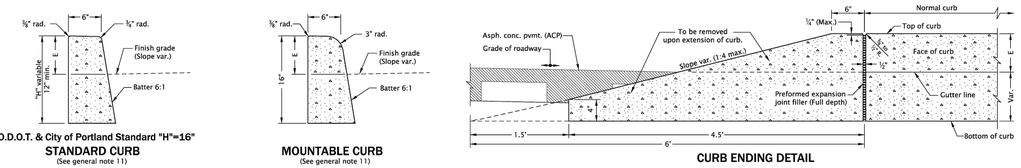

O.D.O.T. & City of Portland Standard "H"=16"
STANDARD CURB
(See general note 11)

MOUNTABLE CURB
(See general note 11)

CURB ENDING DETAIL

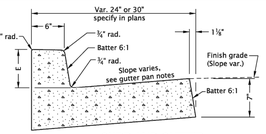

CURB AND GUTTER

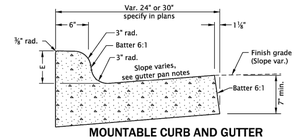

MOUNTABLE CURB AND GUTTER

GUTTER PAN NOTES:

Slope 5.0% normal.

Slope 4.0% max. at curb ramps.

Vary slope as reqd. for drainage. Vary where shown on plans, and allowed by jurisdiction.

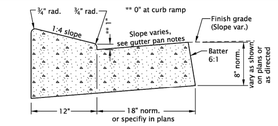

LOW PROFILE MOUNTABLE CURB AND GUTTER
(Where shown on plans)

rd700.dgn 20-JUL-2020

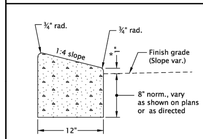

* 0" for Truck Apron

LOW PROFILE
MOUNTABLE CURB
(See general note 11)

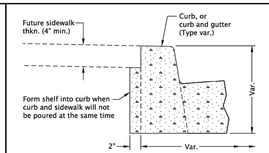

MODIFICATION FOR KEYWAY
(Where shown on plans)

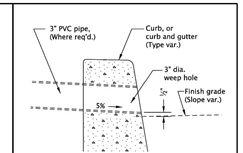

WEEP HOLE DETAIL
(Where shown on plans, and allowed by jurisdiction)

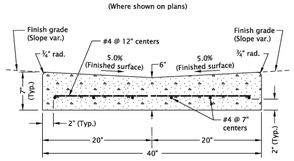

VALLEY GUTTER

GENERAL NOTES FOR ALL DETAILS ON THIS SHEET:

1. Curb exposure "E" = 6" to 9", as measured vertically from flowline to highest point on curb. Vary as shown on plans or as directed. O.D.O.T standard "E"=7".
2. Const. curb expansion joints at 200' maximum spacing, and at points of tangency, and at ends of each driveways.
3. Const. curb contraction joints at 15' maximum spacing, and at ends of each inlet and curb ramp.
4. Transitions shall be used to connect curbs of different exposures "E". ("E" is the total vertical dimension of those curb surfaces having a slope of 1:1 or steeper). Minimum desirable transition length shall be 20' for each 1" difference in "E".
5. Tops of all curbs shall slope toward the roadway at 1.5% max. (Max. 2.0% finished surface slope), unless otherwise shown, or as directed.
6. Dimensions are nominal, vary to conform with curb machine approved by the engineer.
7. Dimensions adjacent to radii are measured to the point of intersection of curb surfaces.
8. For sidewalk details, and monolithic curb & sidewalk, see Std. Dwgs. RD720 & RD721.
9. For drainage curbs, see Std. Dwg. RD701.
10. For curb ramp details, see Std. Dwgs. RD900 series.
11. On or along state highways, curb and gutter is required at curb ramp.

CALC. BOOK NO. N/A | SDR DATE 20-JUL-2020

NOTE: All material and workmanship shall be in accordance with the current Oregon Standard Specifications

The selection and use of this Standard Drawing, while designed in accordance with generally accepted engineering principles and practices, is the sole responsibility of the user and should not be used without consulting a Registered Professional Engineer.

OREGON STANDARD DRAWINGS

CURBS

2021

DATE	REVISION DESCRIPTION

Effective Date: December 1, 2022 - May 31, 2023 RD700

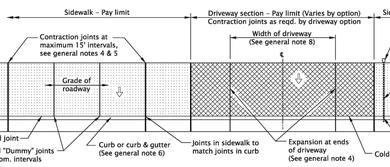

TYPICAL PLAN VIEW - CURB LINE SIDEWALK

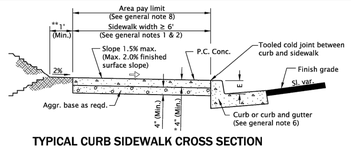

TYPICAL CURB SIDEWALK CROSS SECTION

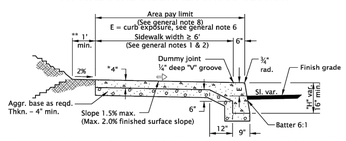

TYPICAL MONOLITHIC CURB & SIDEWALK CROSS SECTION
E = curb exposure, see general note 6

* Min. 4" or as specified in plans. A thickness ≥ 6" if sidewalk is intended as portion of a driveway or mountable curb is used.

** Provide compacted backfill adjacent to curb and sidewalk

*** Objects with base below 2'-3" may protrude any distance as long as the 5' circulation path is maintained. When an object with a base higher than 2'-3" protrudes further than 4" provide a detection below protrusion to delineate edge.

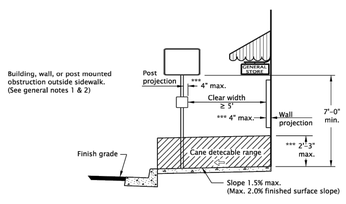

CLEAR CIRCULATION PATH

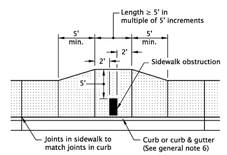

REQUIRED SIDEWALK WIDENING
AROUND OBSTRUCTIONS

GENERAL NOTES FOR ALL DETAILS ON THIS SHEET:

1. Include additional paved or unpaved 2' shy distance to vertical faces higher than 5' such as retaining walls, sound walls, fences and buildings.
2. Curb type and sidewalk width as shown on plans or as directed. On sidewalks 8' and wider, provide a longitudinal joint at the midpoint.
3. Install 3" pvc weep hole pipes in sidewalks where shown on plans, and allowed by jurisdiction. Place contraction joint over top of pipe. See Std. Dwg. RD700 for weep hole details.
4. Provide expansion joints around poles, posts, boxes, at ends of each driveway, and other fixtures which protrude through or against the structures. For sidewalk, monolithic curb & sidewalk, const. expansion joints at 45' maximum spacing. See Std. Dwg. RD722 for expansion joints details.
5. Const. contraction joints at 15' maximum spacing, and at ends of each curb ramp. See Std. Dwg. RD722 for contraction joints details.
6. For curb details, see Std. Dwgs. RD700 & RD701. ODOT standard E=7".
7. Sidewalk details are based on applicable ODOT standards.
8. Fully lowered sidewalk shown; see project plans for the diveway design specified. For driveway details not shown, see Std. Dwgs. RD725, RD730, RD735, RD740, RD745 & RD750.
9. See project plans for details not shown.

LEGEND

Sidewalk pay limit.

Driveway pay limit, varies by option, (See general note 8).

Cross slope 1.5% max. (Max. 2.0% finished surface slope) (Normal sidewalk cross slope)

CALC. BOOK NO. N/A | SDR DATE 21-JUN-2019

NOTE: All material and workmanship shall be in accordance with the current Oregon Standard Specifications

The selection and use of this Standard Drawing, while designed in accordance with generally accepted engineering principles and practices, is the sole responsibility of the user and should not be used without consulting a Registered Professional Engineer.

OREGON STANDARD DRAWINGS

CURB LINE SIDEWALKS

2021

DATE	REVISION DESCRIPTION

Effective Date: December 1, 2022 - May 31, 2023 RD720

rd720.dgn 20-JUL-2020

ONE INCH EQUALS FULL SCALE

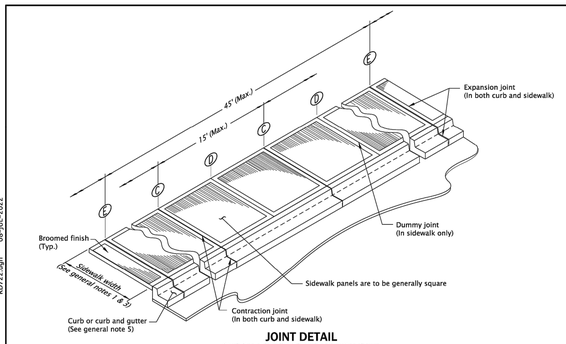

JOINT DETAIL
(Curb line sidewalk with curb and gutter shown)

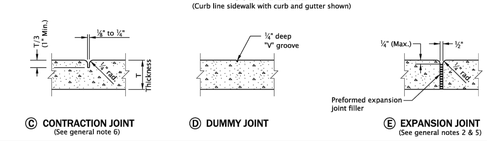

Ⓒ CONTRACTION JOINT
(See general note 6)

Ⓓ DUMMY JOINT

Ⓔ EXPANSION JOINT
(See general notes 2 & 5)

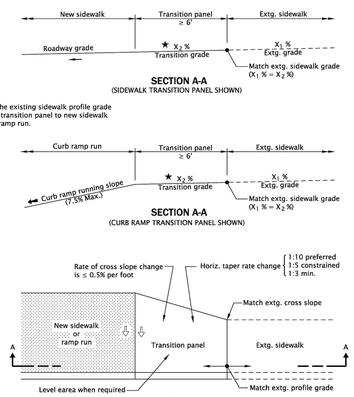

SIDEWALK AND CURB RAMP TRANSITION PANELS

* Project the existing sidewalk profile grade through transition panel to new sidewalk or curb ramp run.

GENERAL NOTES FOR ALL DETAILS ON THIS SHEET:

1. See Std. Dwgs. RD720 and RD721 for concrete sidewalk details. See project plans for sidewalk width, placement and design specified.
2. Provide expansion joints around poles, boxes, at ends of each driveway and other fixtures which protrude through or against the structures. For sidewalk, monolithic curb and sidewalk, provide construction expansion joints at 45 feet maximum spacing.
3. On sidewalks 8 feet and wider, provide a longitudinal joint at the midpoint of sidewalk panel.
4. See Std. Dwgs. RD700 and RD701 for concrete curb details. See project plans for the curb design specified.
5. Do not place expansion joints between separate concrete pours for curb ramp system components construction. Place expansion joints outside of curb ramp runs when required. Install expansion joints flush with surface for structures protruding through the curb ramp system. See Std. Dwg. RD900.
6. Construct contraction joints at 15 feet maximum spacing, and at each curb ramp, driveway, sidewalk and curb.

LEGEND:

New sidewalk or ramp run

Slope 1.5% max. (Max. 2.0% finished surface slope) (Normal sidewalk cross slope)

Slope 7.5% max. (Max. 8.3% finished surface slope)

Zero exposure

CALC. BOOK NO. N/A | SDR DATE 08-JUL-2022

NOTE: All material and workmanship shall be in accordance with the current Oregon Standard Specifications

The selection and use of this Standard Drawing, while designed in accordance with generally accepted engineering principles and practices, is the sole responsibility of the user and should not be used without consulting a Registered Professional Engineer.

OREGON STANDARD DRAWINGS

SIDEWALK JOINTS AND TRANSITION PANELS

2021

DATE	REVISED NOTES	REVISION DESCRIPTION
07-2022		

Effective Date: December 1, 2022 - May 31, 2023 RD722

rd722.dgn 08-JUL-2022

ZCS ENGINEERING ARCHITECTURE

127 NW D Street, Grants Pass, Oregon 97526 | 541-479-3865

REEDSPORT FIRE DISTRICT
124 N 4TH ST.
REEDSPORT, OR 97467

REEDSPORT FIRE STATION 7

FOR INFORMATION ONLY

REVISION ID:	DATE:

PROJECT NO:	G-1468-21
DRAWN:	CMW
CHECKED:	MKW
DATE:	01-24-23

AGENCY STANDARD DETAILS

C5.00

95% CONSTRUCTION DOCUMENTS | BID / PERMIT SET

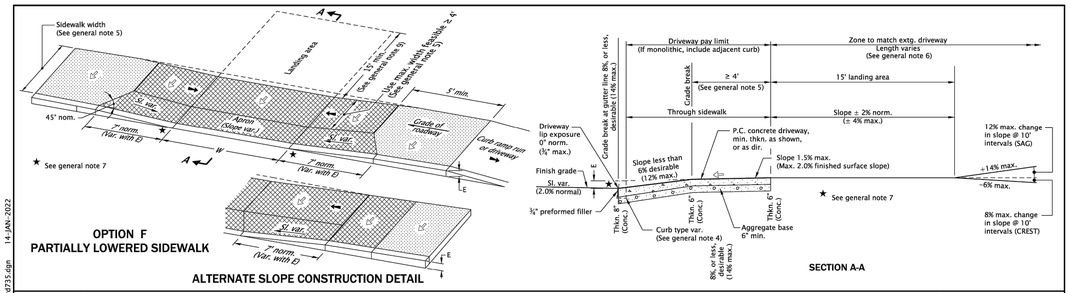

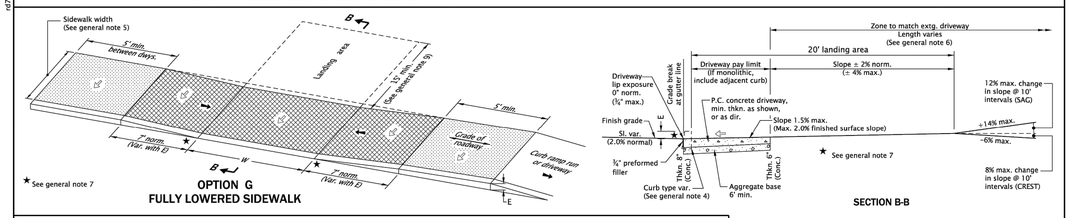

GENERAL NOTES FOR ALL DETAILS ON THIS SHEET:

1. Details are based on applicable ODOT Standards.
2. Only use details allowed by jurisdiction.
3. The following dimensions are as shown on plans, or as directed: driveway width, driveway slope, sidewalk width, curb exposure, driveway lip exposure, landing area length and width. See project plans for details not shown.
4. Curb, gutter, and sidewalk types varies, see plans.
   See Std. Dwgs. RD700 & RD701 for curb details.
   See Std. Dwg. RD720 for sidewalk details.
   See Std. Dwg. RD722 for joint details.
5. A greater than or equal 4' unobstructed clear passage with cross slope 1.5% max. (Max. 2.0% finished surface slope) is required behind driveway apron.
6. Where existing driveway is in good condition, and meets slope requirements, construct only as much landing area as required for satisfactory connection with new work.
7. Check the gutter flow depth at driveway locations to assure that the design flood does not overtop the back of sidewalk at driveway.
   If overtopping occurs place an inlet at upstream side of driveway or perform other approved design mitigation.
8. Construct a full depth expansion joints with 1#22" (in) preformed joint filler at ends of each driveway.
   Tooled joints are required at all driveway slope break lines.
9. 15' min. of the driveway behind the sidewalk should be surfaced to prevent tracking of gravel onto the sidewalk.
10. Monolithic curb & sidewalk shall retain thickened edge through lowered profile, to accommodate driveway use. See Std. Dwg. RD720 for details.

LEGEND:

- Sidewalk
- Driveway pay limit (If monolithic, include adjacent curb) (See project plans for details not shown)
- Cross slope 1.5% max. (Max. 2.0% finished surface slope) (Normal sidewalk cross slope)
- Running slope 7.5% max. (Max. 8.3% finished surface slope)
- W — Width of driveway
- E — Curb exposure

CALC. BOOK NO. N/A | SDR DATE 20-JUL-2020

NOTE: All material and workmanship shall be in accordance with the current Oregon Standard Specifications

The selection and use of this Standard Drawing, while designed in accordance with generally accepted engineering principles and practices, is the sole responsibility of the user and should not be used without consulting a Registered Professional Engineer.

OREGON STANDARD DRAWINGS

CURB LINE SIDEWALK DRIVEWAYS OR ALLEYS (OPTIONS F & G) ODOT HIGHWAYS

2021

DATE	REVISION DESCRIPTION

RD735

Effective Date: December 1, 2022 - May 31, 2023

14-JAN-2022 rd735.dgn

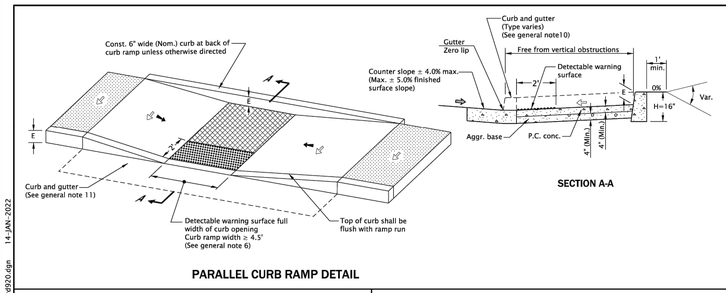

GENERAL NOTES FOR ALL DETAILS ON THIS SHEET:

1. Curb ramp details are based on applicable ODOT Standards.
2. See Std. Dwgs. RD700 & RD701 for curbs.
   See Std. Dwgs. RD720 & RD721 for sidewalks.
   See Std. Dwgs. RD902 through RD908 for detectable warning surface installation details.
   See Std. Dwg. TM240 for crosswalk closure detail.
3. Site conditions normally require a project specific design. See project plans for details not shown.
4. Tooled dummy joints are required at all curb ramp grade break lines, (see Std. Dwg. RD722).
5. Curb ramp slopes shown are relative to the true level horizon (zero bubble).
6. Place detectable warning surface at the back of curb for a minimum depth of 2' in the direction of pedestrian travel full width of curb ramp opening that is adjacent to traffic.
7. Grade breaks at the top and bottom of curb ramp runs shall be perpendicular to the direction of the ramp run. Grade breaks shall not be permitted on the surface of ramp runs and turning spaces. Surface slopes that meet at grade breaks shall be flush.
8. When 2 ramp runs are immediately adjacent, the curb exposure (E) between the adjacent side may range between 3" and full design exposure.
9. Curb ramps for shared use paths intersecting a roadway shall be full width of path, excluding flares. When a curb ramp is used to provide bicycle access from a roadway to a sidewalk, the curb ramp opening will be ≥ 8' wide, (see Std. Dwg. RD909 for additional details).
10. Place an inlet at upstream side of curb ramp or perform other approved design mitigation. Check the gutter flow depth at curb ramp locations to assure that the design flood does not overtop the back of sidewalk.
11. On or along state highways, curb and gutter is required at curb ramps.

LEGEND:

- Sidewalk
- Detectable warning surface
- Level area (Turning space/landing)
  Unobstructed 4.5' x 4.5'
  With obstruction 4.5' x 5.5' (Longer dimension in direction of pedestrian street crossing).
  For the purposes of this application, a max. 2.0% finished surface slope (for drainage) measured perpendicular in two directions is considered level.
- Cross slope 1.5% max. (Max. 2.0% finished surface slope) (Normal sidewalk cross slope)
- Running slope 7.5% max. (Max. 8.3% finished surface slope)
- Counter slope 4.0% max. ascending or descending, (Max. 5.0% finished surface slope) Slope as required for drainage
- 4'x4' clear space

CALC. BOOK NO. N/A | SDR DATE 14-JAN-2022

NOTE: All material and workmanship shall be in accordance with the current Oregon Standard Specifications

The selection and use of this Standard Drawing, while designed in accordance with generally accepted engineering principles and practices, is the sole responsibility of the user and should not be used without consulting a Registered Professional Engineer.

OREGON STANDARD DRAWINGS

PARALLEL CURB RAMP

2021

DATE	REVISION DESCRIPTION
07-2020	DRAWING CREATED
07-2021	REVISED DETAIL AND NOTES
01-2022	REVISED NOTES

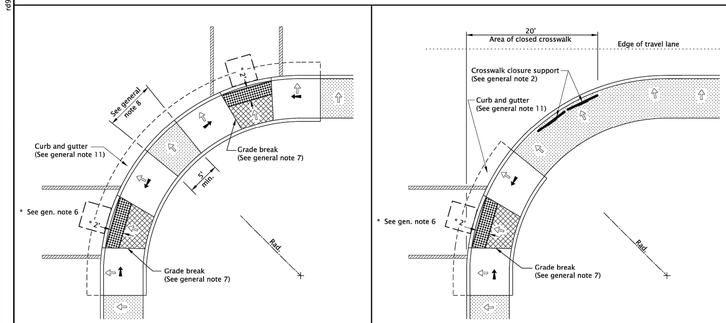

14-JAN-2022 rd920.dgn

RD920

Effective Date: December 1, 2022 - May 31, 2023

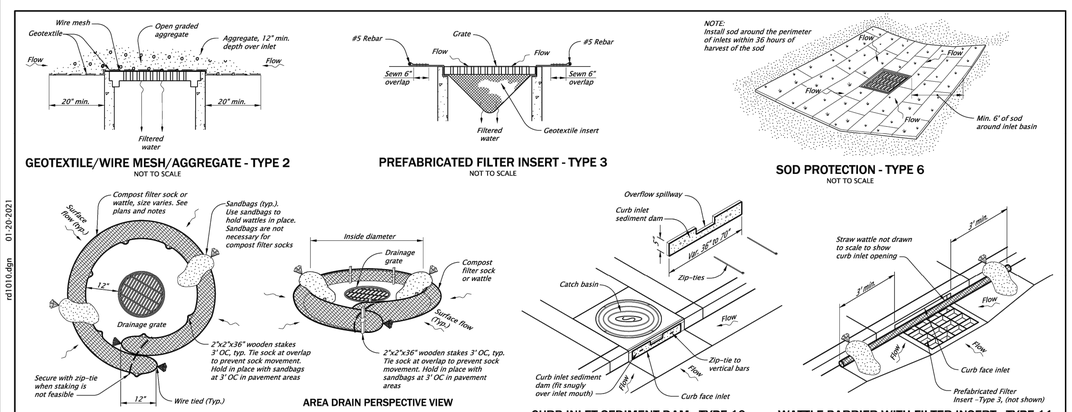

NOTES:
Type 2 – Geotextile/wire mesh/aggregate
Place the wire mesh over the grate.
Place sediment fence geotextile over the wire mesh and perimeter area around structure.
Install aggregate over the geotextile fabric.

Type 3 – Prefabricated filter inserts
Install prefabricated filter inserts according to the plans, special provisions, and manufacturer recommendations.
Prefabricated inserts with provisions for overflow are allowed only when accompanied by additional BMP's to prevent the potential of sediments entering project storm systems.
Field fabricated inserts are not allowed.

Type 7 – Compost filter sock
Drive 2"x2" wood stakes a minimum of 6" into ground and flush with the top of the sock.
Overlap ends of sock per manufacturers recommendations (12"min., 36" max.).
Use 8" to 12" dia sock on curbside in traffic areas.

(Type 7 cont.)
Use 12" to 18" dia sock in non-traffic areas or areas where the larger socks can be used safely.
use synthetic mesh socks for temporary installations.

Type 10 – Curb inlet sediment dam
Fit curb inlet sediment dam snugly into inlet mouth. Curb inlet sediment dam is required for use with inlet filter insert where at-grade inlet grate and curb inlet are combined at a catch basin.

Type 11 – Wattle barrier with filter insert
Install prefabricated filter insert per Type 3 detail.
Install wattles over opening and 36" to each side of opening tight against curb. Adjust wattle to force storm water to flow through filter insert or wattle prior to leaving the site.
Adjust, replace or modify the inlet protection as needed to prevent sediment laden water from entering the catch basin.

CALC. BOOK NO. N/A | SDR DATE January, 2021

NOTE: All material and workmanship shall be in accordance with the current Oregon Standard Specifications

The selection and use of this Standard Drawing, while designed in accordance with generally accepted engineering principles and practices, is the sole responsibility of the user and should not be used without consulting a Registered Professional Engineer.

OREGON STANDARD DRAWINGS

INLET PROTECTION TYPE 2, 3, 6, 7, 10 AND 11

2021

DATE	REVISION DESCRIPTION
Jan 2021	Removed Calc book numbers
Jan 2021	Moved notes up from overlapping the sheet border

RD1010

Effective Date: December 1, 2022 - May 31, 2023

01-20-2021 rd1010.dgn

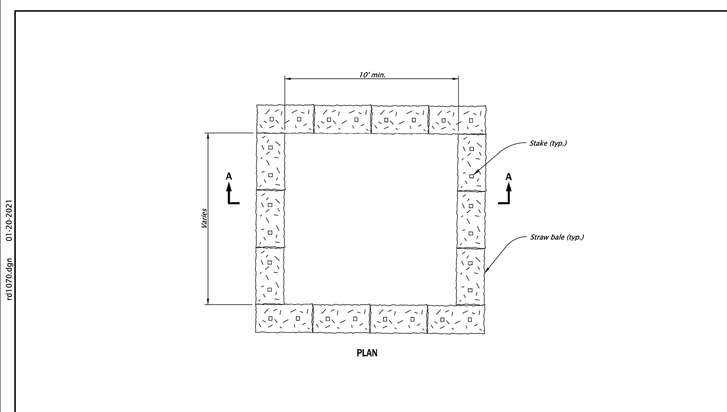

CALC. BOOK NO. N/A | SDR DATE January, 2021

NOTE: All material and workmanship shall be in accordance with the current Oregon Standard Specifications

The selection and use of this Standard Drawing, while designed in accordance with generally accepted engineering principles and practices, is the sole responsibility of the user and should not be used without consulting a Registered Professional Engineer.

OREGON STANDARD DRAWINGS

CONCRETE TRUCK WASH OUT

2021

DATE	REVISION DESCRIPTION

RD1070

Effective Date: December 1, 2022 - May 31, 2023

01-20-2021 rd1070.dgn

ONE INCH EQUALS FULL SCALE

ZCS ENGINEERING ARCHITECTURE
127 NW D Street, Grants Pass,
Oregon 97526 | 541-479-3865

REEDSPORT FIRE DISTRICT
124 N 4TH ST.
REEDSPORT, OR 97467

REEDSPORT FIRE STATION 7

FOR INFORMATION ONLY

REVISION ID:	DATE:

PROJECT NO:	G-1468-21
DRAWN:	CMW
CHECKED:	MKW
DATE:	01-24-23

AGENCY STANDARD DETAILS

C5.10

95% CONSTRUCTION DOCUMENTS | BID / PERMIT SET

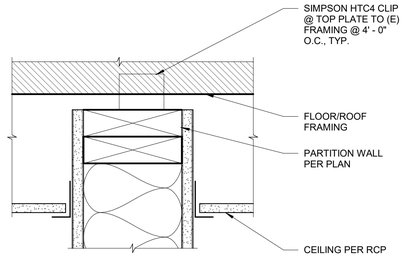

4 / A0.1 DETAIL - T.O.W. BRACE (NON-LOAD BEARING WALLS)
3" = 1'-0"

WALL TYPE LEGEND

SCALE: 1" = 1'-0"

GENERAL WALL TYPE NOTES:

A. PROVIDE BLOCKING AS REQUIRED TO SECURE WALL HUNG COMPONENTS.
B. EXTEND ALL COMPONENTS TO UNDERSIDE OF DECK, UNLESS NOTED OTHERWISE.
C. PROVIDE "GREEN BOARD" IN ALL WET LOCATIONS ADJACENT TO PLUMBING FIXTURES

A1 EXT. LVL SHEAR WALL | NOT RATED

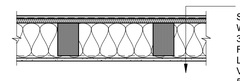

-EXTERIOR-
SIDING - SEE ELEVATIONS
WEATHER BARRIER
3/4" PLY SHEATHING - SEE STRUC
R-21 MIN BATT INSULATION
LVL - SEE STRUC
VAPOR BARRIER
5/8" GYP BD - LEVEL 4 FINISH - PAINTED
-INTERIOR-

A2 EXT. STUD SHEAR WALL | NOT RATED

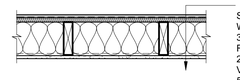

-EXTERIOR-
SIDING - SEE ELEVATIONS
WEATHER BARRIER
3/4" PLY SHEATHING - SEE STRUC
R-21 MIN BATT INSULATION
2x6 WOOD FRAMING - 16" O.C.
VAPOR BARRIER
5/8" GYP BD - LEVEL 4 FINISH - PAINTED
-INTERIOR-

B1 INT. SHEAR WALL | NOT RATED

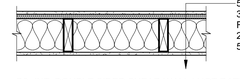

5/8" GYP BD - LEVEL 4 FINISH - PAINTED
3/4" PLY SHEATHING - SEE STRUC
R-21 MIN BATT INSULATION
2x6 WOOD FRAMING - 16" O.C.
5/8" GYP BD - LEVEL 4 FINISH - PAINTED

B2 INT. DOUBLE SIDED SHEAR WALL | NOT RATED

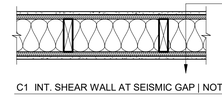

(N) 5/8" GYP BD - LEVEL 4 FINISH - PAINTED
(N) 3/4" PLY SHEATHING - SEE STRUC
(N) VAPOR BARRIER
(N) 2x6 WOOD FRAMING - 16" O.C.
(N) R-21 MIN. INSULATION
(N) 3/4" PLY SHEATHING - SEE STRUC
(N) 5/8" GYP BD - LEVEL 4 FINISH - PAINTED

C1 INT. SHEAR WALL AT SEISMIC GAP | NOT RATED

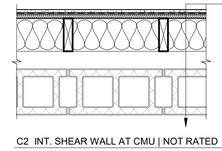

(N) 5/8" GYP BD - LEVEL 4 FINISH - PAINTED
(N) VAPOR BARRIER
(N) 3/4" PLY SHEATHING - SEE STRUC
(N) 2x6 WOOD FRAMING - 16" O.C.
(N) R-21 MIN. INSULATION
SEISMIC GAP - SEE STRUC
(E) CMU WALL

C2 INT. SHEAR WALL AT CMU | NOT RATED

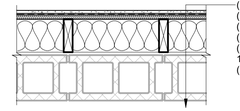

(N) 5/8" GYP BD - LEVEL 4 FINISH - PAINTED
(N) VAPOR BARRIER
(N) 3/4" PLY SHEATHING - SEE STRUC
(N) 2x6 WOOD FRAMING - 16" O.C.
(N) R-21 MIN. INSULATION
1/2" AIR GAP
(E) CMU WALL

C3 INT. LVL SHEAR SHEAR WALL | NOT RATED

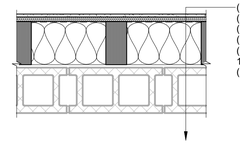

(N) 5/8" GYP BD - LEVEL 4 FINISH - PAINTED
(N) PLY. SHEATHING - SEE STRUC
(N) VAPOR BARRIER
(N) 4X8 LVL FRAMING - SEE STRUC
(N) R-21 MIN. INSULATION
1/2" AIR GAP
(E) CMU WALL

D1 BEARING WALL | NOT RATED |

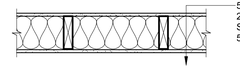

5/8" GYP - LEVEL 4 FINISH - PAINTED
2x6 WOOD STUDS 16" O.C.
SOUND BATT INSULATION
5/8" GYP BD - LEVEL 4 FINISH PAINTED

E PARTITION WALL | NOT RATED |

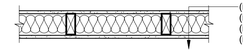

(N) 5/8" GYP - LEVEL 4 FINISH - PAINTED
(N) 2x4 WOOD STUDS 16" O.C.
(N) SOUND BATT INSULATION
(N) 5/8" GYP BD - LEVEL 4 FINISH PAINTED

F1 (E) EXTERIOR WALL W/ (N) FINISH | NOT RATED

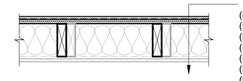

-EXTERIOR-
(N) SIDING - SEE ELEVATIONS
(N) WEATHER BARRIER
(N) 3/4" PLY SHEATHING - SEE STRUC
(E) SOUND BATT INSULATION
(E) 2X6 WOOD FRAMING - 16" O.C.
(N) 2X6 WOOD FRAMING - 16" O.C.
(E) VAPOR BARRIER
(E) 5/8" GYP BD - LEVEL 4 FINISH - PAINTED
-INTERIOR-

F2 (E) INTERIOR WALL W/ (N) PLYWOOD & FINISH | NOT RATED

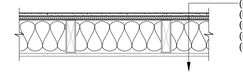

(N) 5/8" GYP - LEVEL 4 FINISH - PAINTED
(N) PLYWOOD, S.S.D.
(E) 2x FRAMING 16" O.C.
(N) SOUND BATT INSULATION
(E) 5/8" GYP BD - LEVEL 4 FINISH PAINTED

G INT. SHEAR WALL W/ (E) WOOD FRAMMED WALL | NOT RATED

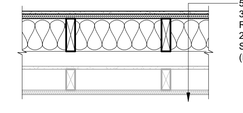

5/8" GYP BD - LEVEL 4 FINISH - PAINTED
3/4" PLY SHEATHING - SEE STRUC
R-21 MIN BATT INSULATION
2x6 WOOD FRAMING - 16" O.C.
SEISMIC GAP - SEE STRUC.
(E) WOOD FRAMED WALL

ROOF TYPE LEGEND

SCALE: 1" = 1'-0"

BB ASPHALT SHINGLE ROOFING - X" | NOT RATED

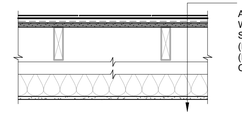

-EXTERIOR-
ASPHALT SHINGLES
WEATHER BARRIER
SHEATHING, SEE STRUCT.
(E) FRAMING, SEE STRUCT.
(E) INSULATION
CEILING FINISH PER RCP
-INTERIOR-

CC TPO ROOFING - 21-1/4" | NOT RATED |

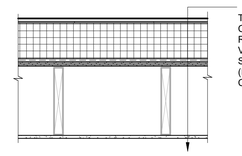

-EXTERIOR-
TPO ROOFING
COVERBOARD
R-30 MIN. CONTINUOUS RIGID INSULATION
VAPOR BARRIER
SHEATHING, SEE STRUCT.
(E) FRAMING, SEE STRUCT.
CEILING FINISH PER RCP
-INTERIOR-

FLOOR TYPE LEGEND

SCALE: 1" = 1'-0"

AA CONCRETE SLAB - 4" | NOT RATED

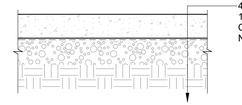

4" CONCRETE SLAB, SEE STRUCT.
15 MIL VAPOR BARRIER
COMPACTED GRAVEL, SEE STRUCT.
NATIVE SOIL

DD 2ND FLOOR FRAMING - 11-1/2" | NOT RATED |

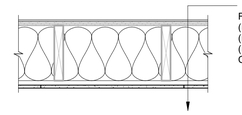

-2ND FLOOR-
FLOORING PER FINISH PLAN
(E) PLYWOOD
(N) FIBERGLASS INSULATION FULL DEPTH OF CAAVITY
(E) WD FRAMING
CEILING FINISH PER RCP
-1ST FLOOR-

ZCS
ENGINEERING
ARCHITECTURE
127 NW D Street, Grants Pass,
Oregon 97526 | 541-479-3865

REEDSPORT FIRE DISTRICT
124 N 4TH ST.
REEDSPORT, OR 97467

REEDSPORT FIRE STATION 7

REGISTERED ARCHITECT
Jacob Zander
OREGON CITY, OR
12412
STATE OF OREGON

△	DATE:	Description

PROJECT NO.	G-1468-21
DRAWN:	MJC,PWR,TBS
CHECKED:	JEZ
DATE:	01-24-23

ASSEMBLIES

A0.1

95% CONSTRUCTION DOCUMENTS | BID / PERMIT SET

ONE INCH EQUALS FULL SCALE

4/25/2023 2:12:55 PM

DOOR, FRAME AND HARDWARE SCHEDULE

DOOR NUMBER	ROOM NUMBER	ROOM NAME	DOOR SIZE W	DOOR SIZE H	DOOR SIZE T	DOOR MTL	DOOR TYPE	DOOR GLAZE	DOOR NOTES	DOOR FUNDING	DOOR FUNCTION	FRAME MTL	FRAME NOTES	HARDWARE HW SET	HARDWARE NOTES
101A	101	APP BAY	3' - 0"	7' - 0"	0' - 1 3/4"	WD	SFP	-		NON-SRG	STORAGE	HM		1.0	
101B	101	APP BAY	3' - 0"	7' - 0"	0' - 1 3/4"	HM	SFL	T	1	SRG	ENTRY	HM	1	2.0	2
101C	101	APP BAY	12' - 0"	11' - 0"	0' - 2 1/8"	-	OS	T		SRG	-	-		3.0	
101D	101	APP BAY	12' - 0"	11' - 0"	0' - 2 1/8"	-	OS	T		SRG	-	-		3.0	
101E	101	APP BAY	3' - 0"	7' - 0"	0' - 1 3/4"	HM	SFL	T	1	NON-SRG	ENTRY	HM	1	2.0	2
102	102	EVIDENCE	3' - 0"	7' - 0"	0' - 1 3/4"	HM	SFP	-	2	NON-SRG	ENTRY	HM		4.0	1
102A	122	CORRIDOR	3' - 0"	7' - 0"	0' - 1 3/4"	HM	SFP	-	2	NON-SRG	PASSAGE	HM		4.0	1
103	103	RR	3' - 0"	7' - 0"	0' - 1 3/4"	WD	SFP	-	2	NON-SRG	PRIVACY	HM		6.0	
103A	103	RR	2' - 6"	7' - 0"	0' - 1 3/4"	WD	SFP	-		NON-SRG	STORAGE	HM		7.0	
104	104	SERVER	3' - 0"	7' - 0"	0' - 1 3/4"	WD	SFP	-		NON-SRG	STORAGE	HM		5.0	1
105A	122	CORRIDOR	3' - 0"	7' - 0"	0' - 1 3/4"	WD	SFP	-	2	SRG	ENTRY	HM		4.0	1
108A	108	DISPATCH	3' - 0"	7' - 0"	0' - 1 3/4"	WD	DD	-	2	SRG	OFFICE	HM		8.0	
108B	108	DISPATCH	3' - 0"	7' - 0"	0' - 1 3/4"	HM	SFL	T	1	NON-SRG	ENTRY	HM	1	9.0	1
109	109	RR	3' - 0"	7' - 0"	0' - 1 3/4"	WD	SFP	-	2	NON-SRG	PRIVACY	HM		6.0	
110	110	FOYER	3' - 0"	7' - 0"	0' - 1 3/4"	HM	SFP	-	2	SRG	ENTRY	HM		4.0	1
122	122	CORRIDOR	3' - 0"	7' - 0"	0' - 1 3/4"	HM	CS	-	2	NON-SRG	PASSAGE	HM		10.0	
201A	201	CONFERENCE	3' - 0"	7' - 0"	0' - 1 3/4"	WD	CS	T	2	NON-SRG	PASSAGE	HM		11.0	
201B	201	CONFERENCE	3' - 0"	7' - 0"	0' - 1 3/4"	HM	SFL	T	1	SRG	ENTRY	HM	1	12.0	1
203	203	RR	3' - 0"	7' - 0"	0' - 1 3/4"	WD	SFP	-	2	SRG	PRIVACY	HM		6.0	
204	204	STORAGE	3' - 0"	7' - 0"	0' - 1 3/4"	WD	SFP	-		NON-SRG	STORAGE	HM		7.0	
205	205	STORAGE	3' - 0"	7' - 0"	0' - 1 3/4"	WD	SFP	-		NON-SRG	STORAGE	HM		7.0	
E107	107	ARMORY	3' - 0"	6' - 8"	0' - 2"	EX	EX	-	3	NON-SRG	EX	EX		EX	1
E110	110	FOYER	3' - 0"	6' - 8"	0' - 2"	EX	EX	-	3	NON-SRG	EX	EX		EX	1
E114	114	HALL	3' - 0"	6' - 8"	0' - 1 3/4"	EX	EX	-	3	NON-SRG	EX	EX		EX	1

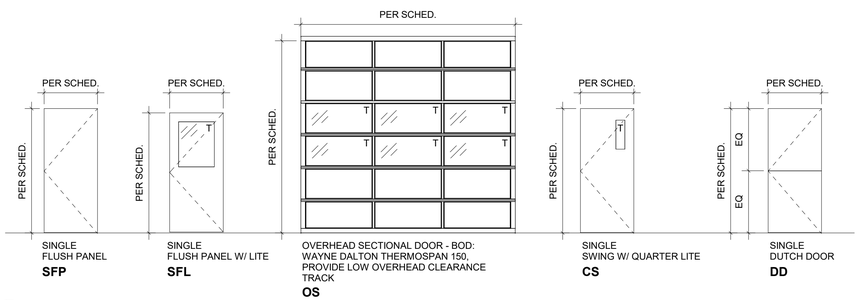

DOOR TYPES
1/4" = 1'-0"

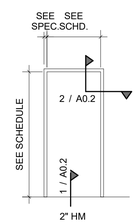

DOOR FRAME TYPES
1/4" = 1'-0"

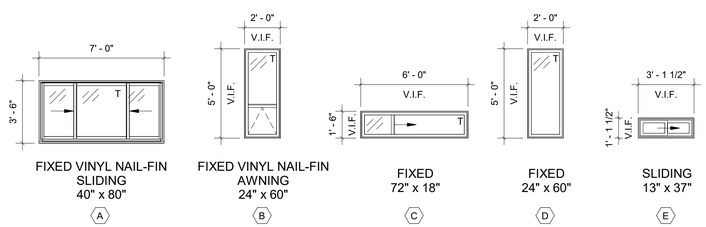

INTERIOR

WINDOW NOTES:

*****ALL EXTERIOR WINDOWS TO BE INSULATED GLAZING UNITS (IGU'S)***
*****ALL WINDOWS ARE TO BE CLEAR GLAZING (BATHROOMS TO BE OPAQUE).***
*****INNER PANE OF GLASS TO BE LOW-E***
*****ALL WINDOWS SHALL COMPLY WITH ASTM E 774***
*****G.C. TO PROVIDE SAFETY GLAZING FOR ALL WINDOWS WITHIN 24" OF ANY DOOR AND ANY OTHER CRITICAL LOCATION PER OSSC SECTION 2406.3***

WINDOW TYPES
1/4" = 1'-0"

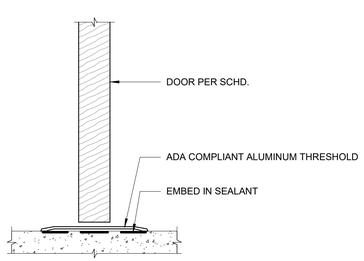

1 / A0.2 DOOR THRESHOLD DETAIL
3" = 1'-0"

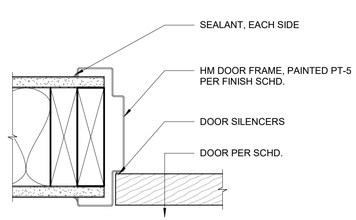

2 / A0.2 INT. DOOR JAMB-HEAD SIM.
3" = 1'-0"

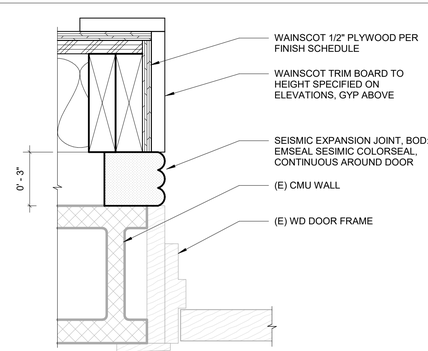

3 / A0.2 INT. DOOR JAMB-HEAD SIM. @ SEISMIC JOINT
3" = 1'-0"

ONE INCH EQUALS FULL SCALE 4/25/2023 2:12:57 PM

DOOR, FRAME AND HARDWARE SCHEDULE NOTES

Manufacturer List

MK	McKinney
OT	Other
PE	Pemko
RO	Rockwood
SU	Securitron
YA	Yale

Set: 1.0

Qty	Item	Description	Finish	Mfr
3	Hinge, Full Mortise	TA2714 4.5 x 4.5	US26D	MK
1	Storeroom	PBR 8805FL 2196	626	YA
1	Surface Closer	2701	689	YA
1	Kick Plate	K1050 10X1.5LDW CSK BEV	US32D	RO
1	Door Stop	441CU/409 as required	US26D	RO
1	Threshold	FHSL14SS as detailed		PE
1	Gasketing	S44GR		PE
1	Door Bottom	222AV		PE

Set: 2.0

Qty	Item	Description	Finish	Mfr
2	Hinge (heavy weight)	T4A3386 x NRP 4.5 x 4.5	US32D	MK
1	Electric Hinge, Hvy Wt*	T4A3386-QC12 4-1/2" x 4-1/2"	US32D	MK
1	Electrified Rim Exit, Fail Secure*	6100FED B PB691F 1193 x 6-Pin	630	YA
1	Surface Closer	5801	689	YA
1	Kick Plate	K1050 10X1.5LDW CSK BEV	US32D	RO
1	Door Stop	463-RKW	US32D	RO
1	Threshold	FHSL14SS as detailed		PE
1	Rain Guard	346C		PE
1	Sweep	315CN		PE
1	Frame Harness*	QC-C1500 (as required)		MK
1	Door Harness*	QC-C__ (as required)		MK
1	Position Switch*	DPS-M-GR		SU
1	Power Supply	provided by access control.		
1	Card Reader/Keypad	provided by access control.		OT

Set: 3.0

Qty	Item	Description	Finish	Mfr
1	Hardware	by door mfg.		

Set: 4.0

Qty	Item	Description	Finish	Mfr
2	Hinge (heavy weight)	T4A3786 4.5 x 4.5	US26D	MK
1	Hinge, Full Mortise, Hvy Wt*	T4A3786 QC12 4-1/2" x 4-1/2"	US26D	MK
1	Surface Closer	2701	689	YA
1	Kick Plate	K1050 10X1.5LDW CSK BEV	US32D	RO
1	Door Stop	441CU/409 as required	US26D	RO
1	Gasketing	S44GR		PE
1	Frame Harness*	QC-C1500 (as required)		MK
1	Door Harness*	QC-C__ (as required)		MK
1	Position Switch*	DPS-M-GR		SU
1	Power Supply	provided by access control.		
1	Card Reader	provided by access control.		

Set: 5.0

Qty	Item	Description	Finish	Mfr
2	Hinge, Full Mortise	TA2714 4.5 x 4.5	US26D	MK
1	Hinge, Full Mortise*	TA2714 QC12 4-1/2" x 4-1/2"	US26D	MK
1	Fail Secure Lock RX*	PBR6 8891FL 2196 REX	626	YA
1	Surface Closer	2701	689	YA
1	Kick Plate	K1050 10X1.5LDW CSK BEV	US32D	RO
1	Door Stop	441CU/409 as required	US26D	RO
1	Gasketing	S44GR		PE
1	Frame Harness*	QC-C1500 (as required)		MK
1	Door Harness*	QC-C__ (as required)		MK
1	Position Switch*	DPS-M-GR		SU
1	Power Supply	provided by access control.		
1	Card Reader	provided by access control.		

Set: 6.0

Qty	Item	Description	Finish	Mfr
3	Hinge, Full Mortise	TA2714 4.5 x 4.5	US26D	MK
1	Privacy Lock w/Occupancy Indicator	PBR 8802FL V21	626	YA
1	Surface Closer	2701	689	YA
1	Kick Plate	K1050 10X1.5LDW CSK BEV	US32D	RO
1	Door Stop	441CU/409 as required	US26D	RO
1	Gasketing	S44GR		PE
1	Coat Hook	RM802	US32D	RO

Set: 7.0

Qty	Item	Description	Finish	Mfr
3	Hinge, Full Mortise	TA2714 4.5 x 4.5	US26D	MK
1	Storeroom	PBR 8805FL 2196	626	YA
1	Door Stop	441CU/409 as required	US26D	RO
1	Gasketing	S44GR		PE

Set: 8.0

Qty	Item	Description	Finish	Mfr
4	Hinge (heavy weight)	T4A3786 4.5 x 4.5	US26D	MK
1	Surface Bolt	630-4	US26D	RO
1	Office Lock	PBR 8809FL 2196	626	YA
2	Kick Plate	K1050 10X1.5LDW CSK BEV	US32D	RO
1	Door Stop	441CU/409 as required	US26D	RO
1	Gasketing	S44GR		PE
1	Astragal	306-AST	US32D	RO

Set: 9.0

Qty	Item	Description	Finish	Mfr
2	Hinge (heavy weight)	T4A3386 x NRP 4.5 x 4.5	US32D	MK
1	Electric Hinge, Hvy Wt*	T4A3386-QC12 4-1/2" x 4-1/2"	US32D	MK
1	Fail Secure Lock RX*	PBR6 8891FL 2196 REX	626	YA
1	Surface Closer	5801	689	YA
1	Kick Plate	K1050 10X1.5LDW CSK BEV	US32D	RO
1	Door Stop	463-RKW	US32D	RO
1	Threshold	FHSL14SS as detailed		PE
1	Rain Guard	346C		PE
1	Gasketing	S44GR		PE
1	Sweep	315CN		PE
1	Frame Harness*	QC-C1500 (as required)		MK
1	Door Harness*	QC-C__ (as required)		MK
1	Position Switch*	DPS-M-GR		SU
1	Power Supply	provided by access control.		
1	Card Reader	provided by access control.		

Set: 10.0

Qty	Item	Description	Finish	Mfr
3	Hinge (heavy weight)	T4A3786 4.5 x 4.5	US26D	MK
1	Fire Rated Rim Exit, Passage	6100FED PB628F	630	YA
1	Surface Closer	2701	689	YA
1	Kick Plate	K1050 10X1.5LDW CSK BEV	US32D	RO
1	Door Stop	441CU/409 as required	US26D	RO
1	Threshold	FHSL14SS as detailed		PE
1	Gasketing	S44GR		PE
1	Door Bottom	222AV		PE

Set: 11.0

Qty	Item	Description	Finish	Mfr
3	Hinge (heavy weight)	T4A3786 4.5 x 4.5	US26D	MK
1	Fire Rated Rim Exit, Passage	6100FED PB628F	630	YA
1	Surface Closer	2701	689	YA
1	Kick Plate	K1050 10X1.5LDW CSK BEV	US32D	RO
1	Door Stop	441CU/409 as required	US26D	RO
1	Gasketing	S44GR		PE

Set: 12.0

Qty	Item	Description	Finish	Mfr
2	Hinge (heavy weight)	T4A3386 x NRP 4.5 x 4.5	US32D	MK
1	Electric Hinge, Hvy Wt*	T4A3386-QC12 4-1/2" x 4-1/2"	US32D	MK
1	Electrified Rim Exit, Fail Secure*	6100FED B PB691F 1193 x 6-Pin	630	YA
1	Surface Closer	5801	689	YA
1	Kick Plate	K1050 10X1.5LDW CSK BEV	US32D	RO
1	Door Stop	463-RKW	US32D	RO
1	Threshold	FHSL14SS as detailed		PE
1	Rain Guard	346C		PE
1	Sweep	315CN		PE
1	Frame Harness*	QC-C1500 (as required)		MK
1	Door Harness*	QC-C__ (as required)		MK
1	Position Switch*	DPS-M-GR		SU
1	Power Supply	provided by access control.		
1	Card Reader	provided by access control.		

DOOR, FRAME & HARDWARE GENERAL NOTES

A. ALL CLOSERS TO COMPLY WITH ANSI A117.1-2003, SECTION 4.13
B. CONTRACTOR TO VERIFY ALL ROUGH OPENING SIZES WITH DOOR MANUFACTURER.
C. SEE FLOOR PLANS FOR DOOR SWING
D. PROVIDE SAFETY GLASS IN ALL DOORS AND SIDELIGHTS
E. PROVIDE SHOP DRAWINGS FOR ARCH. REVIEW AND APPROVAL.
F. PROVIDE SIGNAGE PER G2.0

ABBREVIATIONS

HM	WELDED HOLLOW METAL
WD	WOOD - MATCH EXISTING
ALM	ALUMINUM
T	TEMPERED GLASS
GMB	GLASS MARKER BOARD
EX	EXISTING - TO REMAIN

DOOR NOTES

1. EXTERIOR - INSULATE
2. PROVIDE SIGNAGE PER SPEC.
3. EXISTING DOOR TO RECEIVE NEW ACCESS CONTROL HARDWARE

FRAME NOTES

1. EXTERIOR - INSULATE

HARDWARE NOTES

1. ELECTRIFIED - PROVIDE CARD READER FUNCTION. **NOTE: ALL CARD READER HARDWARE TO BE FUNDED BY OWNER.**
2. PROVIDE KEYPAD

HARDWARE SPECIAL NOTE

* HARDWARE COMPONENT MARKED WITH ASTERISK TO BE ELECTRIFIED COMPONENT.

ZCS ENGINEERING ARCHITECTURE
127 NW D Street, Grants Pass, Oregon 97526 | 541-479-3865

REEDSPORT FIRE DISTRICT
124 N 4TH ST.
REEDSPORT, OR 97467

REEDSPORT FIRE STATION 7

REGISTERED ARCHITECT Jacob Zander OREGON CITY, OR 12412 STATE OF OREGON

△	DATE:	Description
2	Date 2	REV 2

PROJECT NO.	G-1468-21
DRAWN:	MJC,PWR,TBS
CHECKED:	JEZ
DATE:	01-24-23

DOOR & WINDOW SCHEDULES

A0.2

95% CONSTRUCTION DOCUMENTS I BID / PERMIT SET

ALTERNATE 3: ALTERNATE HARDWARE SCHEDULE

Manufacturer List

MK	McKinney
YA	Yale
PE	Pemko
RO	Rockwood

Set: 1.0
Doors: 101A

Qty	Item	Description	Finish	Mfr
3	Hinge, Full Mortise	TA2714 4.5 x 4.5	US26D	MK
1	Storeroom	PBR 8805FL 2196	626	YA
1	Surface Closer	2701	689	YA
1	Kick Plate	K1050 10X1.5LDW CSK BEV	US32D	RO
1	Door Stop	441CU/409 as required	US26D	RO
1	Gasketing	S44GR		PE

Set: 2.0
Doors: 101B, 108B

Qty	Item	Description	Finish	Mfr
3	Hinge (heavy weight)	T4A3386 x NRP 4.5 x 4.5	US32D	MK
1	Access Control Mort Lock Keypad*	PBR NTM622-ACC	626	YA
1	Surface Closer	2701	689	YA
1	Kick Plate	K1050 10X1.5LDW CSK BEV	US32D	RO
1	Door Stop	463-RKW	US32D	RO
1	Threshold	FHSL14SS as detailed		PE
1	Rain Guard	346C		PE
1	Door Bottom	222AV		PE

Set: 3.0
Doors: 101C, 101D

Qty	Item	Description	Finish	Mfr
1	Hardware	by door mfg.		

Set: 4.0
Doors: 101E

Qty	Item	Description	Finish	Mfr
3	Hinge (heavy weight)	T4A3386 x NRP 4.5 x 4.5	US32D	MK
1	Access Control Mort Lock Keypad*	PBR NTM622-ACC	626	YA
1	Surface Closer	5801	689	YA
1	Kick Plate	K1050 10X1.5LDW CSK BEV	US32D	RO
1	Door Stop	463-RKW	US32D	RO
1	Threshold	FHSL14SS as detailed		PE
1	Rain Guard	346C		PE
1	Gasketing	S44GR		PE
1	Sweep	315CN		PE

Set: 5.0
Doors: 102A, 102

Qty	Item	Description	Finish	Mfr
3	Hinge, Full Mortise	TA2714 4.5 x 4.5	US26D	MK
1	Access Control Mort Lock Keypad*	PBR NTM622-ACC	626	YA
1	Storeroom or Closet Lock	PBR 8805FL 2196	626	YA
1	Surface Closer	2701	689	YA
1	Kick Plate	K1050 10X1.5LDW CSK BEV	US32D	RO
1	Door Stop	441CU/409 as required	US26D	RO
1	Gasketing	S44GR		PE

Set: 6.0
Doors: 103, 109, 203

Qty	Item	Description	Finish	Mfr
3	Hinge, Full Mortise	TA2714 4.5 x 4.5	US26D	MK
1	Privacy Lock w/Occupancy Indicator	PBR 8802FL V21	626	YA
1	Surface Closer	2701	689	YA
1	Kick Plate	K1050 10X1.5LDW CSK BEV	US32D	RO
1	Door Stop	441CU/409 as required	US26D	RO
1	Gasketing	S44GR		PE
1	Coat Hook	RM802	US32D	RO

Set: 7.0
Doors: 103A, 104, 204, 205

Qty	Item	Description	Finish	Mfr
3	Hinge, Full Mortise	TA2714 4.5 x 4.5	US26D	MK
1	Storeroom	PBR 8805FL 2196	626	YA
1	Door Stop	441CU/409 as required	US26D	RO
1	Gasketing	S44GR		PE

Set: 8.0
Doors: 105A

Qty	Item	Description	Finish	Mfr
3	Hinge, Full Mortise	TA2714 4.5 x 4.5	US26D	MK
1	Classroom or Office Lock	PBR 8809FL 2196	626	YA
1	Kick Plate	K1050 10X1.5LDW CSK BEV	US32D	RO
1	Door Stop	441CU/409 as required	US26D	RO
1	Gasketing	S44GR		PE
1	Surface Closer	2701	689	YA

Set: 10.0
Doors: 108A

Qty	Item	Description	Finish	Mfr
3	Hinge, Full Mortise	TA2714 4.5 x 4.5	US26D	MK
1	Classroom or Office Lock	PBR 8809FL 2196	626	YA
1	Door Stop	441CU/409 as required	US26D	RO
1	Gasketing	S44GR		PE

Set: 11.0
Doors: 110, 122

Qty	Item	Description	Finish	Mfr
3	Hinge, Full Mortise	T4A2714 4.5 x 4.5	US26D	MK
1	Access Control Mort Lock Keypad*	PBR NTM622-ACC	626	YA
1	Surface Closer	2701	689	YA
1	Kick Plate	K1050 10X1.5LDW CSK BEV	US32D	RO
1	Door Stop	441CU/409 as required	US26D	RO
1	Gasketing	S44GR		PE

Set: 12.0
Doors: 201A

Qty	Item	Description	Finish	Mfr
3	Hinge (heavy weight)	T4A3786 4.5 x 4.5	US26D	MK
1	Rim Exit Device, Passage	7100 PB628F	630	YA
1	Surface Closer	2701	689	YA
1	Kick Plate	K1050 10X1.5LDW CSK BEV	US32D	RO
1	Door Stop	441CU/409 as required	US26D	RO
1	Gasketing	S44GR		PE

Set: 13.0
Doors: 201B

Qty	Item	Description	Finish	Mfr
3	Hinge (heavy weight)	T4A3386 x NRP 4.5 x 4.5	US32D	MK
1	Rim Exit Device, Exit Only	7100 EO	630	YA
1	Rim Exit Device Trim Keypad*	PB-NTT620-NR 2196	626	YA
1	Surface Closer Stop Arm	5831	689	YA
1	Kick Plate	K1050 10X1.5LDW CSK BEV	US32D	RO
1	Threshold	FHSL14SS as detailed		PE
1	Rain Guard	346C		PE
1	Sweep	315CN		PE

DOOR, FRAME & HARDWARE GENERAL NOTES

A. ALL CLOSERS TO COMPLY WITH ANSI A117.1-2003, SECTION 4.13
B. CONTRACTOR TO VERIFY ALL ROUGH OPENING SIZES WITH DOOR MANUFACTURER.
C. SEE FLOOR PLANS FOR DOOR SWING
D. PROVIDE SAFETY GLASS IN ALL DOORS AND SIDELIGHTS.
E. PROVIDE SHOP DRAWINGS FOR ARCH. REVIEW AND APPROVAL.
F. PROVIDE SIGNAGE PER G2.0

HARDWARE NOTES

* BATTERY POWERED KEYPAD.

ZCS ENGINEERING ARCHITECTURE
127 NW D Street, Grants Pass, Oregon 97526 | 541-479-3865

REEDSPORT FIRE DISTRICT
124 N 4TH ST.
REEDSPORT, OR 97467

REEDSPORT FIRE STATION 7

REEDSPORT FIRE DEPT. VOLUNTEER

REGISTERED ARCHITECT
Jacob Zander
OREGON CITY, OR
12412
STATE OF OREGON

△	DATE:	Description

PROJECT NO.	G-1468-21
DRAWN:	MJC,PWR,TBS
CHECKED:	JEZ
DATE:	01-24-23

ALTERNATE DOOR HARDWARE SCHEDULE

A0.3

95% CONSTRUCTION DOCUMENTS | BID / PERMIT SET

ONE INCH EQUALS FULL SCALE 4/25/2023 2:12:58 PM

EXTERIOR SIDING

FINISH CODE	MATERIAL	LOCATION	MANUFACTURER	STYLE / COLOR	SIZE	INSTALLATION NOTES
LP1	LAP SIDING	EXTERIOR; SEE A6.0 & A6.1	JAMES HARDIE	HARDIE PLANK SELECT CEDARMILL / COLOR PT1	8.25" W x 0.312" D	7" EXPOSURE
CB2	CEMENT BOARD PANEL RAINSCREEN	EXTERIOR; SEE A6.0 & A6.1	JAMES HARDIE	JAMES HARDIE VERTICAL SIDING PANEL / COLOR PT2	SEE ELEVATIONS	EXPOSED FASTENERS
WC	WOOD COMPOSITE RAINSCREEN	EXTERIOR FEATURE WALL; SEE A6.0 & A6.1	FIBERON	WILDWOOD EDEN COLLECTION / MULGA	7" W x 12' L x 0.75" D	INSTALL IN STAGGERED VERTICAL PATTERN, PROVIDE FURRING STRIPS

FINISH SUMMARY

CONCRETE

CONC-1
See Specifications
Finish: Sealed concrete

FINISH CARPENTRY

WD-2
Product: 1/2 Plywood, 1/8" bevel on vertical edges
Finish: PT-X
Size 48" H
Location: App Bay

CAB-1
Custom Casework
Product: TBD
Finish: Plastic Laminate, See Finish Schedule
Base: Rubber Base Wrapped
Door Profile:See Detail - / ---
Countertop: See Finish Schedule
Location: See Finish Schedule

ARCHITECTURAL WOOD CASEWORK

PLASTIC LAMINATE

PL-1
Manufacturer: Wilsonart
Pattern: Limber Maple
Finish: Matte
Location: Casework Cabinet Uppers

PL-2
Manufacturer: FENIX
Pattern: Grigjo Efeso
Finish: J0725
Location: Casework Base

PL-3
Manufacturer: Wilsonart
Pattern: Organic Cotton
Finish: Fine Velvet
Location: Countertops

ACOUSTICAL CEILINGS

ACOUSTICAL CEILING TILE

ACT-1
Manufacturer: Armstrong
Product: Ultima Square Lay In #1913
NRC: 0.75 & CAC 35
Finish: Fine Texture
Size: 24" x 24" x ¾"
Color: White
Suspension System: Prelude XL 5/16" White
Alt Ceiling in storage and

ACT-2
Manufacturer: Armstrong
Product: Lyra PB Direct Apply
Profile: Square
Installation: Glue Down on 1/2" furring strips
Size: 24" x 24" x 1" square
NRC: .80
Color: White

WINDOW SHADES

BL-1
Manufacturer: Mecho Shade Systems
Product: Mecho/5
Openness Factor: 3%
Color: To Be Selected by Architect
Location: All exterior windows unless otherwise noted.

RESILIENT FLOORING

LVT-1
Manufacturer: Milliken
Style: High Performance Luxury Vinyl Tile
Collection: Fortified Foundations
Size: 9"x48"
Color: Aged Oak
Thickness: 2.5mm
Installation: Ashlar
Location:

RESILIENT BASE

RB-1
Manufacturer: Tarkett
Style: Rubber wall base – cove toe @ hard surfaces
Size: 6-inch
Color: TG6 Mink WG
Location: At Locations Except Restrooms

RUBBER FLOORING

RES-1
Manufacturer: Interface
Collection: Norament Kivo
Color: Flint
Thickness: 2.7mm
Type: Tile
Location: Restrooms, Back of House

PAINTING

PT-1
Manufacturer: TBD
Color: Light Gray
Sheen: Satin
Location: Exterior

PT-2
Manufacturer: TBD
Color: Dark Gray
Sheen: Satin
Location: Exterior

PT-3
Manufacturer: TBD
Color: Dark Gray
Sheen: Semi Gloss
Location: Exterior Trim

PT-5
Manufacturer: TBD
Color: TBD
Sheen: Satin
Location: Door Frames / Trim

PT-6
Manufacturer: TBD
Color: TBD
Sheen: Satin
Location: Conference RM

PT-7
Manufacturer: TBD
Color: TBD
Sheen: Satin
Location: Kitchen

PT-8
Manufacturer: TBD
Color: TBD
Sheen: Satin
Location: Corridors / Main Body

PT-9
Manufacturer: TBD
Color: TBD
Sheen: Satin
Location: Restrooms

PT-10
Manufacturer: TBD
Color: Black
Sheen: Satin
Location: Exterior Trim

CARPETING

CPT-1
Manufacturer: Mohawk Group
Collection: Sketch Effect
Product: BT436 Framed Structure Tile
Color: Steel
Size: 24"x24"
Type: Tile
Installation: Match Existing
Location: Areas for Demo and Patch work

WOM-1
Manufacturer: Tarkett
Name: Assertive Action
Collection: Assertive
Product: Powerbond
Color: Steelwork
Installation: Roll
Location: Conference Room

FIBER REINFORCED PLASTIC

FRP-1
Manufacturer: Panolam
Product: FRP Wall Panel
Style: Smooth
Rating: CLASS A
Thickness: 0.075"
Color: White
Size: 48" High, See Finish Schedule
Provide Matching Vertical Vinyl Trim, Schluter Top Trim & Base Trim
Location: Storage, Janitorial RM, Restrooms

RUBBER BASE AND TREADS

RB-1
Manufacturer: Tarkett
Product: Baseworks Thermoset Rubber (Type TS)
Color: TBD
Size: 4"

RB-2
Manufacturer: Tarkett
Product: Angle Fit Rubber Stair Tread With Integrated Riser
Color: TBD

FINISH SCHEDULE

Room Number	Room Name	Floor Finish	Base Finish	WALL FINISHES North	East	South	West	Ceiling Finish	Casework Finish	Notes
101	APP BAY	SC-1	RB-1	PT-8/WD-2	PT-8/WD-2	PT-8/WD-2	PT-8/WD-2	PT-X	---	
101A	GENERATOR	SC-1	RB-1	PT-8	PT-8	PT-8	PT-8	PT-X	---	
102	EVIDENCE	SC-1	RB-1	PT-8 / FRP-1	PT-8 / FRP-1	PT-8 / FRP-1	PT-8 / FRP-1	ACT-1	---	
102A	EVID. PREP.					PT-8 / FRP-1	PT-8 / FRP-1	ACT-1	---	
103	RR	RES-1	RES-1	PT-9	PT-9	PT-9 / FRP-1	PT-9 / FRP-1	PT-X	---	4
104	SERVER	RES-1	RB-1	PT-8	PT-8	PT-8	PT-8	ACT-2	---	
105A	BREAK	LVT-1	RB-1	PT-8	PT-7	PT-8	PT-8	ACT-2	PL-1 / PL-2	
105B	BREAK	---	---	---	---	---	---	---	---	
107	ARMORY	LVT-1	RB-1	PT-8 / FRP-1	PT-8 / FRP-1	PT-8 / FRP-1	PT-8 / FRP-1	PT-X	---	
108	DISPATCH	LVT-1	RB-1	PT-8	PT-8	PT-8	PT-8	ACT-1	PL-2 / PL-3	
109	RR	RES-1	RES-1	PT-9	PT-9	PT-9 / FRP-1	PT-9 / FRP-1	PT-X	---	4
110	FOYER	WOM-1	RB-1	NO SCOPE	NO SCOPE	NO SCOPE	NO SCOPE	NO SCOPE	NO SCOPE	
111	OFFICE	CPT-1	RB-1	NO SCOPE	NO SCOPE	NO SCOPE	NO SCOPE	NO SCOPE	NO SCOPE	
112	OFFICE	NO SCOPE	NO SCOPE	NO SCOPE	NO SCOPE	NO SCOPE	NO SCOPE	NO SCOPE	NO SCOPE	
113	OFFICE	CPT-1	RB-1	NO SCOPE	NO SCOPE	NO SCOPE	NO SCOPE	NO SCOPE	NO SCOPE	3
114	HALL	LVT-1	RB-1	PT-8	PT-10	PT-8	PT-8	PT-X	PL-1 / PL-2 / PL-3	3, 4
115	JANITOR	NO SCOPE	NO SCOPE	NO SCOPE	NO SCOPE	NO SCOPE	NO SCOPE	NO SCOPE	NO SCOPE	
116	OFFICE	NO SCOPE	NO SCOPE	NO SCOPE	NO SCOPE	NO SCOPE	NO SCOPE	NO SCOPE	NO SCOPE	
117	RR	NO SCOPE	NO SCOPE	NO SCOPE	NO SCOPE	NO SCOPE	NO SCOPE	NO SCOPE	NO SCOPE	
118	RR	NO SCOPE	NO SCOPE	NO SCOPE	NO SCOPE	NO SCOPE	NO SCOPE	NO SCOPE	NO SCOPE	
119	OFFICE	NO SCOPE	NO SCOPE	NO SCOPE	NO SCOPE	NO SCOPE	NO SCOPE	NO SCOPE	NO SCOPE	
122	CORRIDOR	LVT-1	RB-1	PT-8	PT-8	PT-8	PT-8	ACT-1	PT-8	
123	HALL	LVT-1	RB-1	PT-8	PT-8	PT-8	PT-8	PT-X	---	
201	CONFERENCE	CPT-1	RB-1	PT-6	PT-6	PT-6	PT-6	PT-X / ACT-2	PL-2	
202	KITCHEN	LVT-1	RB-1	PT-7	PT-7	PT-7	PT-7	PT-X	---	
203	RR	RES-1	RES-1	PT-9	PT-9	PT-9	PT-9	PT-X	---	4
204	STORAGE	LVT-1	RB-1	PT-8	PT-8	PT-8	PT-8	PT-X	PT-8 / FRP-1	
205	STORAGE	LVT-1	RB-1	PT-8	PT-8	PT-8	PT-8	PT-X	---	
206	ATTIC	---	---	---	---	---	---	---	---	
207	UNFINISHED ATTIC SPACE	---	---	---	---	---	---	---	---	

SHEET NOTES

1. REFER TO TYPICAL MOUNTING HEIGHTS AND ADA DIMENSIONAL STANDARDS ON G2.0.
2. VERIFY ALL FIRE EXTINGUISHER LOCATIONS WITH FIRE CODE OFFICIAL PRIOR TO INSTALL.
3. SEE HM FRAME AND STOREFRONT TYPES ON A0.2.
4. ALL TACKBOARDS AND MARKERBOARDS ALIGN W/ TOP OF DOOR FRAMES, U.O.N.
5. VERIFY ALL FINIAL LOCATIONS OF TELEVISION MONITORS AND MARKERBOARDS WITH OWNER PRIOR TO INSTALL.
6. ALL WET WALLS TO HAVE TILE OR EPOXY PAINT, U.N.O.
7. ALL WALLS TO BE PAINTED PT-1 U.N.O.
8. PROVIDE IN-WALL BLOCKING FOR ALL WALL-MOUNT EQUIPMENT/CASEWORK.
9. EXISTING ELECTRICAL OUTLETS AND SWITCHES TO BE RELOCATED TO THE FACE OF NEW PANELS.

FINISH NOTES

1. NOT USED.
2. NOT USED.
3. PATCH, REPLACE AND BLEND TRANSITIONS FROM EXISTING FINISHES TO NEW FINISHES
4. SELF COVE BASE @ 6"H W/ METAL J-MOLD
5. NOT USED.
6. NOT USED.

ZCS ENGINEERING ARCHITECTURE
127 NW D Street, Grants Pass, Oregon 97526 | 541-479-3865

REEDSPORT FIRE DISTRICT
124 N 4TH ST.
REEDSPORT, OR 97467

REEDSPORT FIRE STATION 7

REEDSPORT FIRE DEPT. VOLUNTEER

REGISTERED ARCHITECT Jacob Zander OREGON CITY, OR 12412 STATE OF OREGON

△	DATE:	Description
2	Date 2	REV 2

PROJECT NO. G-1468-21
DRAWN: MJC,PWR,TBS
CHECKED: JEZ
DATE: 01-24-23

FINISHES & ACCESSORIES

A0.4

95% CONSTRUCTION DOCUMENTS | BID / PERMIT SET

ONE INCH EQUALS FULL SCALE 4/25/2023 2:12:58 PM

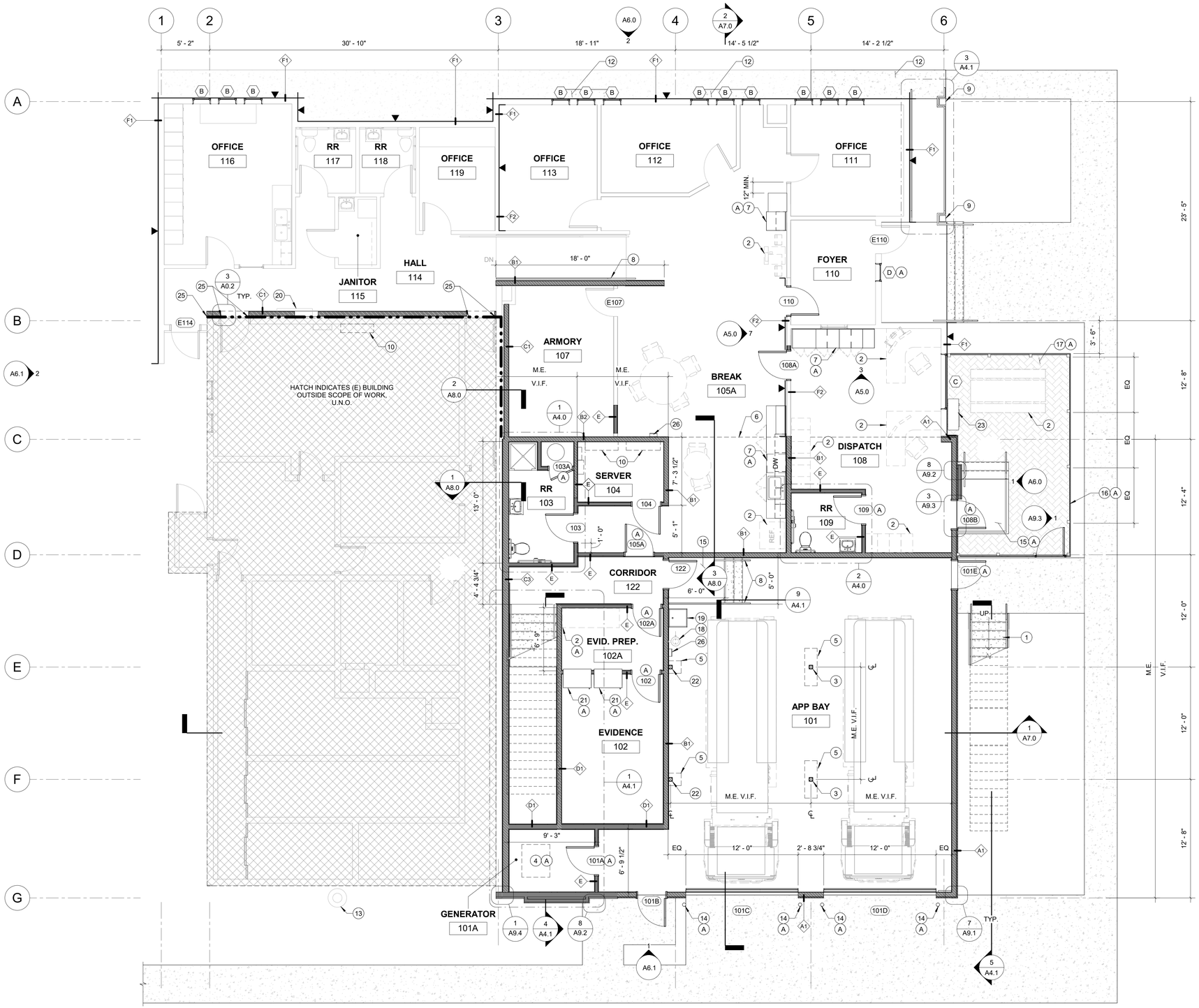

1 A1.1 FIRST FLOOR PLAN
3/16" = 1'-0"

GENERAL NOTES

A. VERIFY ALL DIMENSIONS AND NOTIFY ENGINEER IF DISCREPANCIES OCCUR.

B. G.C. TO PROVIDE FIRE BLOCKING AS REQUIRED PER CODE.

C. G.C. SHALL PROVIDE ALL APPROPRIATE BACKING AS REQUIRED FOR ACCESSORIES AND OTHER MISCELLANEOUS ITEMS. G.C. SHALL PROVIDE IN-WALL BLOCKING FOR WALL MOUNTED EQUIPMENT.

D. G.C. TO COORDINATE INSTALLATION OF ALL UTILITIES W/ RESPECTIVE SUPPLIERS/SUBCONTRACTORS PRIOR TO CONSTRUCTION, TYPICAL.

E. ALL DIMENSION LINES TO THE FACE OF FRAMING, U.N.O.

F. REFER TO DETAIL 2/A0.1 FOR TYP. T.O.W. CONNECTION.

G. G.C. TO PUT BACK ALL WALL-HUNG ITEMS PER (E) CONDITIONS.

H. SEE SHEET G2.0 FOR ADA REQUIREMENTS.

I. VERIFY ALL FIRE EXTINGUISHER LOCATIONS WITH FIRE CODE OFFICIAL PRIOR TO INSTALL. SEE CODE PLAN.

J. VERIFY FINAL LOCATIONS OF TELEVISION MONITORS, TACKBOARDS & MARKERBOARDS WITH OWNER PRIOR TO INSTALL.

K. PATCH CONCRETE SLAB ON GRADE FLOOR IN ALL LOCATIONS WHERE SLAB WAS DEMOLISHED FOR INSTALLATION OF STRUCTURAL PILES. SEE DEMO SHEET D1.1 FOR EXTENTS.

L. REROUTE ELECTRICAL IN WALL TYPE F1 AS NEEDED TO INSTALL NEW STUDS

FLOOR PLAN LEGEND

(E) WALL TO REMAIN

(N) WALL, FUNDED BY SRG

(N) FULL HEIGHT WALL/PARTITION, NOT INCLUDED IN SEISMIC RETROFIT GRANT

(E) WALL W/ (N) SHEATHING/FINISH; ARROW INDICATES SIDE OF WALL TO RECEIVE (N) SHEATHING/FINISH

(N) SEISMIC ISOLATION JOINT, SEE STRUCT.

FLOOR PLAN KEYNOTES

NOT ALL KEYNOTES APPEAR ON SHEET

A. **KEYNOTE (A) INDICATES ITEM IS PART OF REMODEL SCOPE AND NOT SEISMIC RETROFIT RELATED. PROVIDE SEPARATE BIDS FOR REMODEL AND SEISMIC RETROFIT SCOPES OF WORK.**

1. EXTERIOR STEEL STAIRCASE, SEE STRUCT.
2. FURNITURE/EQUIPMENT/FIXTURES, OFCI
3. STL POST, SEE STRUCT. MATCH EXISTING LOCATION. PAINT PER FINISH PLAN A3.1.
4. REINSTALL (E) GENERATOR, SEE ELEC.
5. PATCH CONCRETE, MATCH ADJ. FINISH
6. DASHED LINE INDICATES LIMIT OF CONC. SLAB-ON-GRADE, SEE STRUCT. SLAB EXTENTS TO COVER ALL SPACES SOUTH OF DASHED LINE **EXCEPT** APP BAY 101 & GENERATOR 101A.
7. CASEWORK, SEE INT. ELEVATIONS
8. HANDRAIL, SEE FINISH SUMMARY FOR ADDITIONAL INFO
9. WOOD POST, SEE STRUCT.
10. DATA RACKS, SEE TECH.
11. FLOOR INFILL, SEE STRUCT.
12. SIDEWALK PATCH AS NEEDED TO INSTALL PILES; SEE STRUCT. & CIVIL
13. (E) PROPANE TANK, BRACE PER STRUCT.
14. BOLLARD, SEE CIVIL
15. CONC. LANDING & STAIR
16. **ALTERNATE 1:** DECORATIVE FENCE, SEE DETAIL 1/A9.3
17. PAVERS, SEE CIVIL
18. REINSTALL EYE WASH STATION, SEE MEP
19. UTILITY SINK, SEE PLUMBING
20. (E) ELECTRICAL GEAR, FRAME WALL TO WITHIN 1" MIN.
21. PASS-THROUGH EVIDENCE LOCKER, OFCI
22. STL POST, SEE STRUCT. WRAP POST W/ GWB
23. REINSTALL HVAC UNIT
24. PROVIDE TWO-WAY COMMUNICATION; SEE TECH. PROVIDE SIGNAGE FOR AREA OF REFUGE
25. INTERIOR WALL SEISMIC EXPANSION JOINT COVER, SEE DETAIL 3/A0.2 FOR MORE INFORMATION
26. FIRE EXTINGUISHER CABINET

ZCS ENGINEERING ARCHITECTURE
127 NW D Street, Grants Pass, Oregon 97526 | 541-479-3865

REEDSPORT FIRE DISTRICT
124 N 4TH ST.
REEDSPORT, OR 97467

REEDSPORT FIRE STATION 7

REGISTERED ARCHITECT Jacob Zander OREGON CITY, OR 12412 STATE OF OREGON

△	DATE:	Description
2	Date 2	REV 2

PROJECT NO.	G-1468-21
DRAWN:	MJC,PWR,TBS
CHECKED:	JEZ
DATE:	01-24-23

FIRST FLOOR PLAN

A1.1

95% CONSTRUCTION DOCUMENTS | BID / PERMIT SET

ONE INCH EQUALS FULL SCALE 4/25/2023 2:12:59 PM

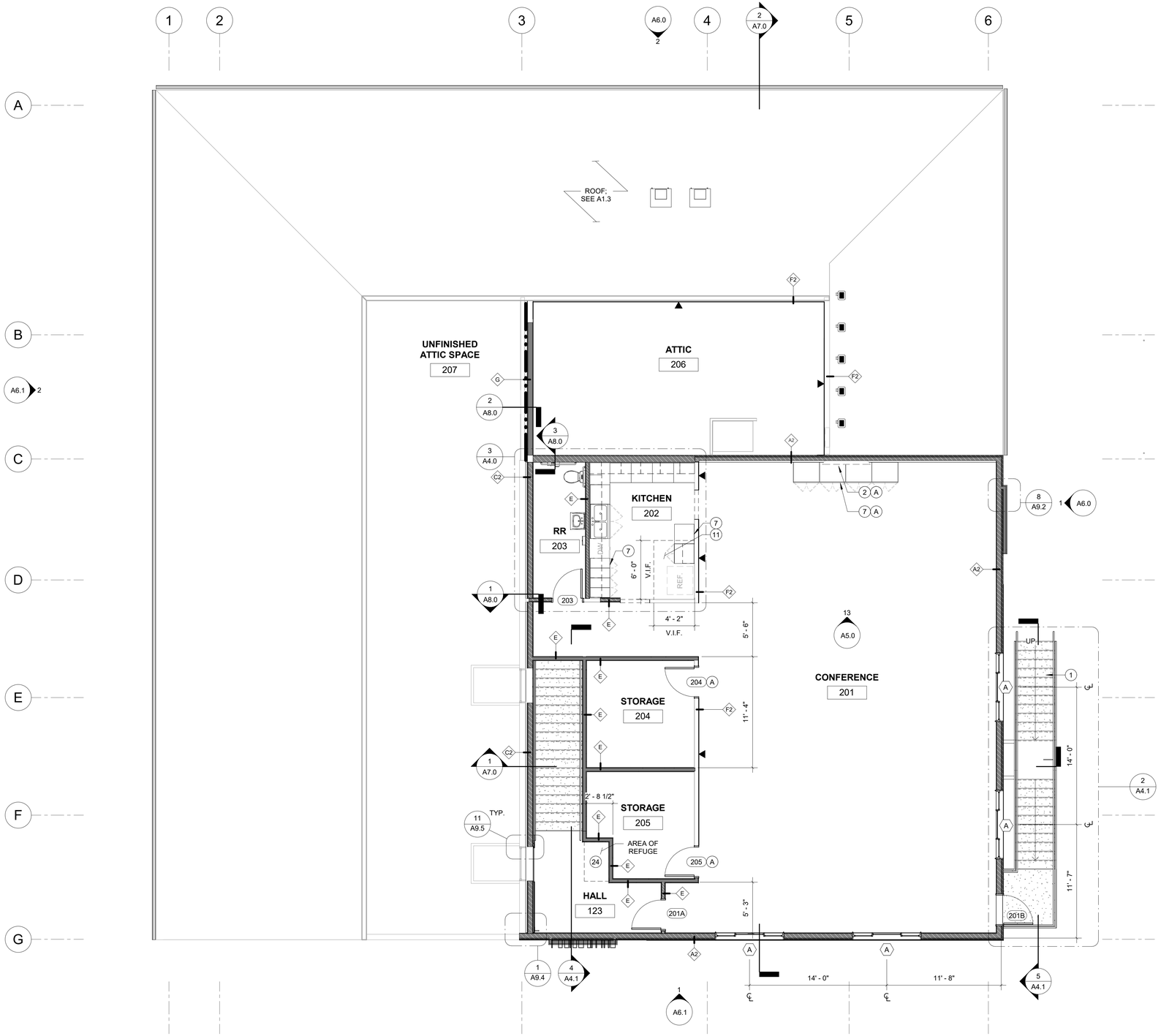

1 A1.2 SECOND FLOOR PLAN
3/16" = 1'-0"

ONE INCH EQUALS FULL SCALE

4/25/2023 2:13:00 PM

GENERAL NOTES

A. VERIFY ALL DIMENSIONS AND NOTIFY ENGINEER IF DISCREPANCIES OCCUR.

B. G.C. TO PROVIDE FIRE BLOCKING AS REQUIRED PER CODE.

C. G.C. SHALL PROVIDE ALL APPROPRIATE BACKING AS REQUIRED FOR ACCESSORIES AND OTHER MISCELLANEOUS ITEMS. G.C. SHALL PROVIDE IN-WALL BLOCKING FOR WALL MOUNTED EQUIPMENT.

D. G.C. TO COORDINATE INSTALLATION OF ALL UTILITIES W/ RESPECTIVE SUPPLIERS/SUBCONTRACTORS PRIOR TO CONSTRUCTION, TYPICAL.

E. ALL DIMENSION LINES TO THE FACE OF FRAMING, U.N.O.

F. REFER TO DETAIL 2/A0.1 FOR TYP. T.O.W. CONNECTION.

G. G.C. TO PUT BACK ALL WALL-HUNG ITEMS PER (E) CONDITIONS.

H. SEE SHEET G2.0 FOR ADA REQUIREMENTS.

I. VERIFY ALL FIRE EXTINGUISHER LOCATIONS WITH FIRE CODE OFFICIAL PRIOR TO INSTALL. SEE CODE PLAN.

J. VERIFY FINAL LOCATIONS OF TELEVISION MONITORS, TACKBOARDS & MARKERBOARDS WITH OWNER PRIOR TO INSTALL.

K. PATCH CONCRETE SLAB ON GRADE FLOOR IN ALL LOCATIONS WHERE SLAB WAS DEMOLISHED FOR INSTALLATION OF STRUCTURAL PILES. SEE DEMO SHEET D1.1 FOR EXTENTS.

L. REROUTE ELECTRICAL IN WALL TYPE F1 AS NECESSARY TO INSTALL PILES.

FLOOR PLAN LEGEND

(E) WALL TO REMAIN

(N) WALL, FUNDED BY SRG

(N) FULL HEIGHT WALL/PARTITION, NOT INCLUDED IN SEISMIC RETROFIT GRANT

(E) WALL W/ (N) SHEATHING/FINISH; ARROW INDICATES SIDE OF WALL TO RECEIVE (N) SHEATHING/FINISH

(N) SEISMIC ISOLATION JOINT, SEE STRUCT.

FLOOR PLAN KEYNOTES

NOT ALL KEYNOTES APPEAR ON SHEET

A. **KEYNOTE (A) INDICATES ITEM IS PART OF REMODEL SCOPE AND NOT SEISMIC RETROFIT RELATED. PROVIDE SEPARATE BIDS FOR REMODEL AND SEISMIC RETROFIT SCOPES OF WORK.**

1. EXTERIOR STEEL STAIRCASE, SEE STRUCT.
2. FURNITURE/EQUIPMENT/FIXTURES, OFCI
3. STL POST, SEE STRUCT. MATCH EXISTING LOCATION. PAINT PER FINISH PLAN A3.1.
4. REINSTALL (E) GENERATOR, SEE ELEC.
5. PATCH CONCRETE, MATCH ADJ. FINISH
6. DASHED LINE INDICATES LIMIT OF CONC. SLAB-ON-GRADE, SEE STRUCT. SLAB EXTENTS TO COVER ALL SPACES SOUTH OF DASHED LINE **EXCEPT** APP BAY 101 & GENERATOR 101A.
7. CASEWORK, SEE INT. ELEVATIONS
8. HANDRAIL, SEE FINISH SUMMARY FOR ADDITIONAL INFO
9. WOOD POST, SEE STRUCT.
10. DATA RACKS, SEE TECH.
11. FLOOR INFILL, SEE STRUCT.
12. SIDEWALK PATCH AS NEEDED TO INSTALL PILES; SEE STRUCT. & CIVIL
13. (E) PROPANE TANK, BRACE PER STRUCT.
14. BOLLARD, SEE CIVIL
15. CONC. LANDING & STAIR
16. **ALTERNATE 1:** DECORATIVE FENCE, SEE DETAIL 1/A9.3
17. PAVERS, SEE CIVIL
18. REINSTALL EYE WASH STATION, SEE MEP
19. UTILITY SINK, SEE PLUMBING
20. (E) ELECTRICAL GEAR, FRAME WALL TO WITHIN 1" MIN.
21. PASS-THROUGH EVIDENCE LOCKER, OFCI
22. STL POST, SEE STRUCT. WRAP POST W/ GWB
23. REINSTALL HVAC UNIT
24. PROVIDE TWO-WAY COMMUNICATION; SEE TECH. PROVIDE SIGNAGE FOR AREA OF REFUGE
25. INTERIOR WALL SEISMIC EXPANSION JOINT COVER, SEE DETAIL 3/A0.2 FOR MORE INFORMATION
26. FIRE EXTINGUISHER CABINET

ZCS ENGINEERING ARCHITECTURE
127 NW D Street, Grants Pass, Oregon 97526 | 541-479-3865

REEDSPORT FIRE DISTRICT
124 N 4TH ST.
REEDSPORT, OR 97467

REEDSPORT FIRE STATION 7

REGISTERED ARCHITECT Jacob Zander OREGON CITY, OR 12412 STATE OF OREGON

△	DATE:	Description
2	Date 2	REV 2

PROJECT NO.	G-1468-21
DRAWN:	MJC,PWR,TBS
CHECKED:	JEZ
DATE:	01-24-23

SECOND FLOOR PLAN

A1.2

95% CONSTRUCTION DOCUMENTS | BID / PERMIT SET

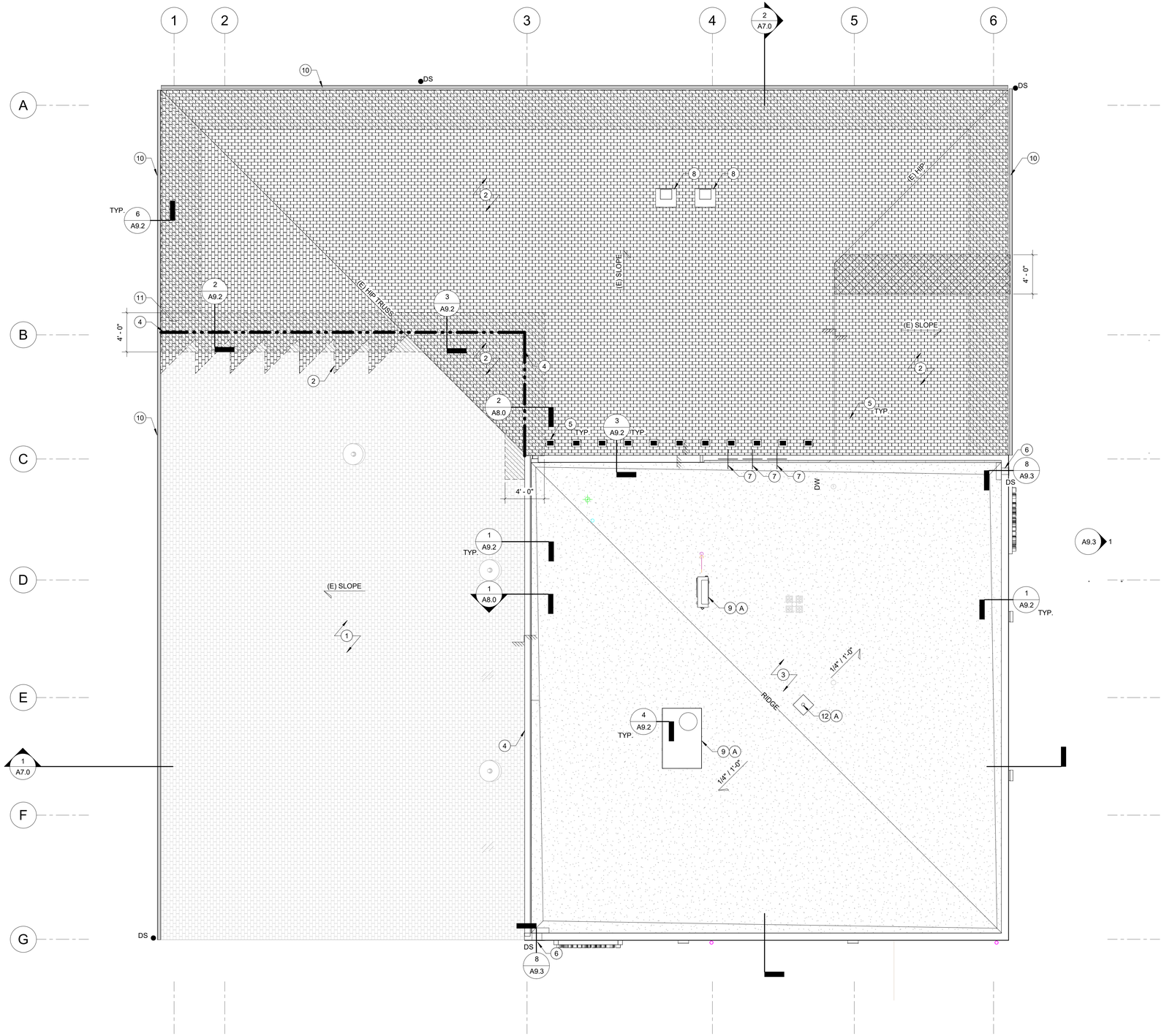

1 A1.3 ROOF PLAN
3/16" = 1'-0"

ROOF PLAN GENERAL NOTES:

A. ALL WORK & MATERIALS SHALL CONFORM TO ALL APPLICABLE STATE AND LOCAL REGULATIONS, STANDARDS AND MFR. SPECIFICATIONS AND THE 2019 OSSC. CONTACT ENGINEER FOR DIRECTIVE IN THE EVENT OF CONFLICTING STANDARDS AND SPECS.

B. VERIFY ALL DIMENSIONS, ELEVATIONS & LOCATIONS PRIOR TO CONSTRUCTION. NOTIFY ENGINEER ON RECORD OF ANY DISCREPANCIES. DIMENSIONS ON THIS PLAN ARE NOT SUITABLE FOR MATERIAL ORDERING USE. CONTRACTOR MUST FIELD VERIFY ALL DIMENSIONS PRIOR TO BIDDING AND ORDERING.

C. THE CONTRACTOR IS RESPONSIBLE FOR THE DESIGN, INSTALLATION, AND MAINTENANCE OF ALL TEMPORARY ROOF ACCESS SYSTEMS. ALL SYSTEMS MUST COMPLY WITH OSHA.

D. THE PROPER DISPOSAL OF ALL DEMOLITION MATERIALS AND DEBRIS WILL BE THE RESPONSIBILITY OF THE CONTRACTOR. THE CONTRACTOR SHALL MAKE EFFORTS TO RECYCLE AS MUCH DEMOLITION MATERIAL AS POSSIBLE.

E. COORDINATE STAGING AND MATERIALS STORAGE AREA WITH DISTRICT PERSONNEL.

F. SECURITY OF STORED MATERIAL IS THE RESPONSIBILITY OF THE CONTRACTOR.

G. NO PORTION OF THE ROOF SHALL BE LEFT UNPROTECTED AGAINST THE ELEMENTS BETWEEN CONTRACTOR SHIFTS.

H. SEE PLAN SET AND/OR SPECIFICATIONS FOR MORE INFORMATION.

ROOF SYMBOLS

FOOTPRINT OF WALL BELOW

ROOF SLOPE

DS (N) DOWNSPOUT LOCATION

SEISMIC ISOLATION JOINT

ROOF PLAN KEYNOTES:

A. **KEYNOTE (A) INDICATES ITEM IS PART OF REMODEL SCOPE AND NOT SEISMIC RETROFIT RELATED. PROVIDE SEPARATE BIDS FOR REMODEL AND SEISMIC RETROFIT SCOPES OF WORK.**

1. (E) ROOFING TO REMAIN
2. (N) ASPHALT SHINGLE ROOF; TIE INTO (E) ASPHALT SHINGLE ROOFING. PROVIDE (N) FLASHING, GUTTERS & DOWNSPOUTS
3. (N) SINGLE-PLY ROOFING W/ TAPERED INSULATION, R-30 MIN.
4. (N) SEISMIC JOINT COVER, BOD: JOHNS MANSVILLE EXPAND-O-MATIC, STYLE EJ
5. (N) ROOF VENT
6. (N) SCUPPER W/ OVERFLOW DRAIN
7. REINSTALL ROOF ANTENNA. G.C. TO COORDINATE INSTALLATION W/ COMMUNICATIONS VENDOR
8. REINSTALL (E) MECH. UNIT
9. (N) MECH. UNIT, SEE MEP
10. (N) GUTTER & DOWNSPOUTS
11. 4' WIDE STRIP OF ICE AND WATER SHIELD LAID OVER WEATHER BARRIER
12. PERMANENT ROOF FALL PROTECTION POST, GALV. PROVIDE FASTENERS & BLOCKING PER MANUFACTURERS INSTRUCTIONS.

ROOF TYPE LEGEND

(E) SHINGLE ROOF

(N) SHINGLE ROOF

(N) SINGLE-PLY ROOF

(N) GRACE ICE & WATER SHIELD UNDERLAYMENT

(N) ROOF SHEATHING PATCH

ZCS ENGINEERING ARCHITECTURE
127 NW D Street, Grants Pass, Oregon 97526 | 541-479-3865

REEDSPORT FIRE DISTRICT
124 N 4TH ST.
REEDSPORT, OR 97467

REEDSPORT FIRE STATION 7

REGISTERED ARCHITECT Jacob Zander OREGON CITY, OR 12412 STATE OF OREGON

△	DATE:	Description
2	Date 2	REV 2

PROJECT NO.	G-1468-21
DRAWN:	MJC,PWR,TBS
CHECKED:	JEZ
DATE:	01-24-23

ROOF PLAN

A1.3

95% CONSTRUCTION DOCUMENTS | BID / PERMIT SET

ONE INCH EQUALS FULL SCALE

4/25/2023 2:13:03 PM

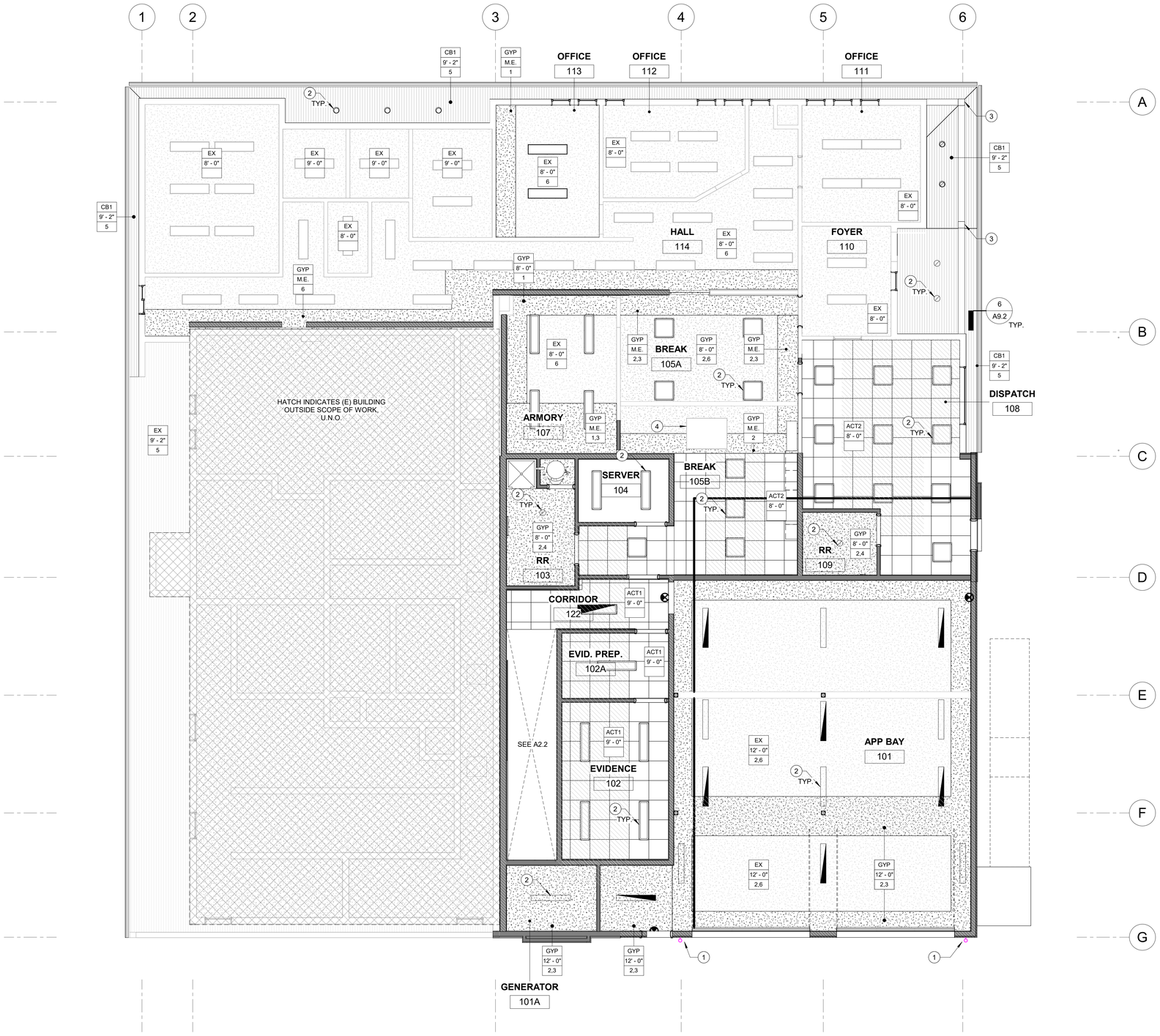

1 A2.1 FIRST FLOOR RCP
3/16" = 1'-0"

ONE INCH EQUALS FULL SCALE 4/25/2023 2:13:04 PM

RCP GENERAL NOTES:

A. REFER TO ARCHITECTURAL FLOOR PLAN FOR ADDITIONAL DIMENSIONS.

B. REFER TO MECHANICAL DRAWINGS FOR MECHANICAL SPECIFICATIONS, DUCTWORK, DUCT PENETRATIONS, EXHAUST FAN REQUIREMENTS.

C. REFER TO ELECTRICAL DRAWINGS FOR LIGHTING SPECIFICATIONS AND REQUIREMENTS.

D. ALL DIMENSIONS ARE REFERENCED TO FACE OF FINISH U.N.O.

E. ALL HEIGHT REFERENCES ARE TAKEN FROM FLOOR FINISH FOR AREA INDICATED.

F. PROVIDE SOLID BLOCKING FOR ALL 'J' BOXES SUSPENDED LIGHT AND CEILING FAN FIXTURES, TELEVISION SUPPORT, ARTIFACT SHELVES AND ANY OTHER CEILING MOUNTED EQUIPMENT.

G. ALL ACOUSTIC TILE JOINT LINES TO BE ALIGNED & COORDINATED FOR FIXTURE PLACEMENT, AVOIDING LESS THAN 1/2 OF A TILE AROUND THE PERIMETER WHEREVER POSSIBLE.

H. PROVIDE SEISMIC BRACING FOR SUSPENDED CEILINGS. SEE 4/A0.1

I. ALL EXPOSED CONDUITS AND 'J' BOXES SHALL BE PAINTED TO MATCH THE ADJACENT FINISH U.N.O.

J. ANY LIGHT NOT DIMENSIONALLY LOCATED TO BE CENTERED IN THE CEILING TILE, CEILING AREA, OR ROOM AS APPLICABLE. ALL "CAN" TYPE FIXTURES TO BE MOUNTED IN THE CENTER OF THE CEILING TILES UNLESS NOTED OTHERWISE.

K. PAINT ALL EXPOSED DUCTWORK TO MATCH CEILING.

L. PROVIDE 2x6 WOOD FRAMING FOR GYP. CEILINGS

M. PATCH AND REPAIR EXISTING & NEW ADJACENT SURFACES FOR AFLOATED SEAMLESS AND SMOOTH TRANSITIONS.

REFLECTED CEILING LEGEND:

ACT — CEILING MATERIAL
8'-0" — CEILING HEIGHT
NOTES — ADDITIONAL NOTES

CEILING LEGEND :

(E) GYP CEILING

(N) GYP CEILING
GYP

(N) SUSPENDED ACOUSTICAL CEILING TILE
ACT2

(N) DIRECT APPLIED ACOUSTICAL CEILING TILE
ACT3

(N) CEMENT BOARD SOFFIT
CB1

EXISTING CEILING

HATCH INDICATES ITEM IS PART OF REMODEL SCOPE OF WORK AND NOT SEISMIC RETROFIT RELATED. ALL BIDS SHALL CONTAIN SEPARATE LINE-ITEM PRICING THAT DISTINGUISHES REMODEL RELATED SCOPE OF WORK FROM SEISMIC RELATED SCOPE OF WORK.

LIGHTING - SEE ELECTRICAL

HVAC REGISTERS - SEE MECHANICAL

EXIT SIGN

CEILING FINISHES

EX — EXISTING CEILING, SEE ADDITIONAL NOTES
VS — VENTED CEMENT BOARD, SEE FINISH SCHD.

CEILING HEIGHT

VAR — VARIES
M.E. — MATCH EXISTING

ADDITIONAL NOTES

1. PAINT CEILING TO MATCH (E)
2. PAINT PT-X
3. INSTALL GYP TIGHT TO STRUCTURE
4. PROVIDE 2x6 CEILING FRAMING @ 16" O.C.
5. PAINT PT-X
6. PAINT CEILING ENTIRELY

(#) RCP KEYNOTES

A. **KEYNOTE (A) INDICATES ITEM IS PART OF REMODEL SCOPE AND NOT SEISMIC RETROFIT RELATED. PROVIDE SEPARATE BIDS FOR REMODEL AND SEISMIC RETROFIT SCOPES OF WORK.**

1. (N) WALL MOUNTED FLASHING BEACON, BOD: FEDERAL SIGNAL PRO LED BEACON, TALL DOME, PROVIDE BRANCH GUARD ACCESSORY

2. (N) LIGHT FIXTURE, SEE ELECT.

3. (N) POST, SEE STRUCT., WRAP PER DETAIL 3/A9.3

4. (N) BEAM, WRAP PER DETAIL 3/A9.3

5. (N) EXPOSED DUCT, PAINT PTX, SEE MECH.

6. REINSTALL (E) DUCT. SEE MECH.

ZCS ENGINEERING ARCHITECTURE
127 NW D Street, Grants Pass, Oregon 97526 | 541-479-3865

REEDSPORT FIRE DISTRICT
124 N 4TH ST.
REEDSPORT, OR 97467

REEDSPORT FIRE STATION 7

REGISTERED ARCHITECT Jacob Zander OREGON CITY, OR 12412 STATE OF OREGON

△	DATE:	Description
2	Date 2	REV 2

PROJECT NO.	G-1468-21
DRAWN:	MJC,PWR,TBS
CHECKED:	JEZ
DATE:	01-24-23

FIRST FLOOR RCP

A2.1

95% CONSTRUCTION DOCUMENTS | BID / PERMIT SET

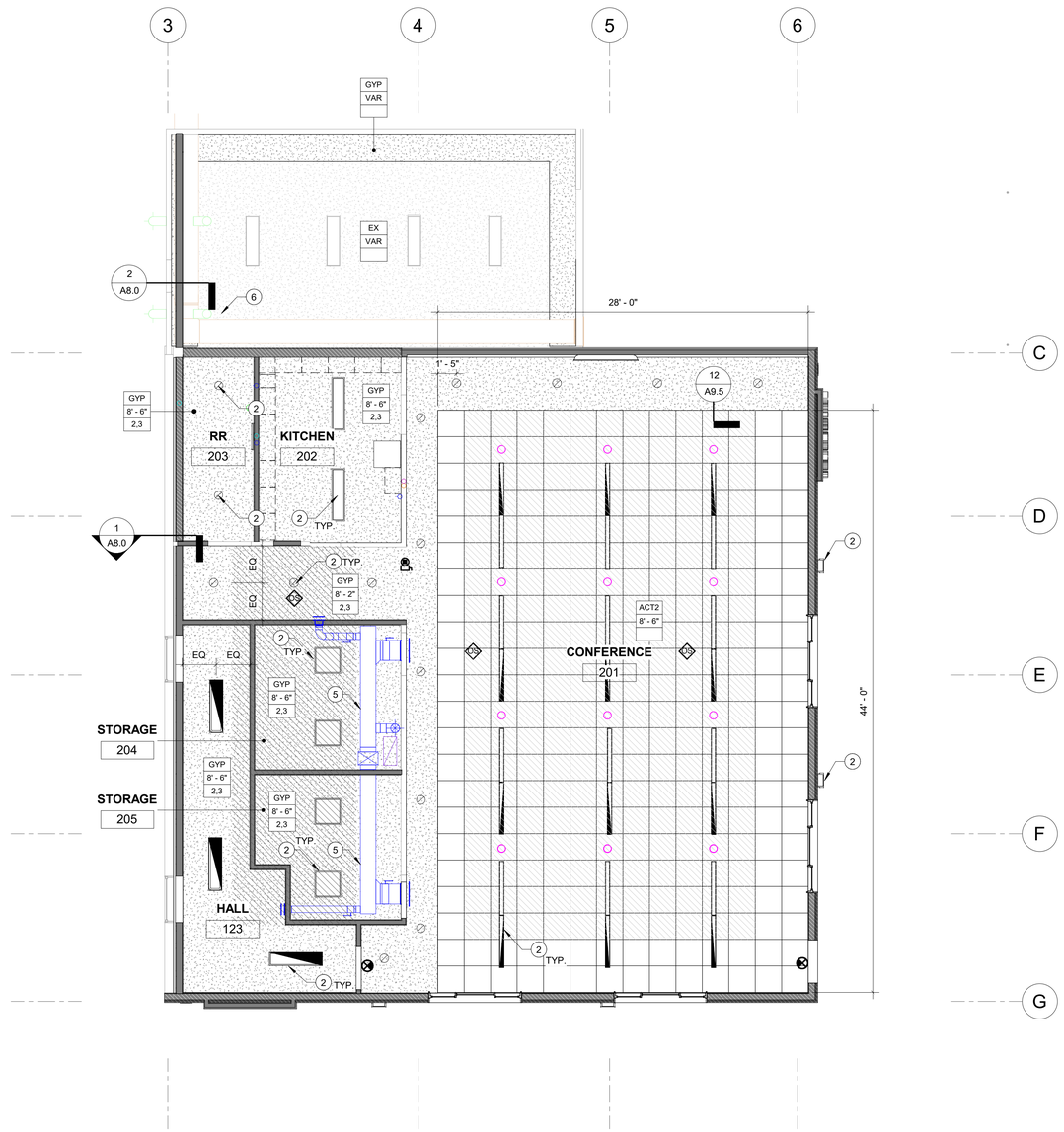

1 A2.2 SECOND FLOOR RCP
3/16" = 1'-0"

RCP GENERAL NOTES:

A. REFER TO ARCHITECTURAL FLOOR PLAN FOR ADDITIONAL DIMENSIONS.

B. REFER TO MECHANICAL DRAWINGS FOR MECHANICAL SPECIFICATIONS, DUCTWORK, DUCT PENETRATIONS, EXHAUST FAN REQUIREMENTS.

C. REFER TO ELECTRICAL DRAWINGS FOR LIGHTING SPECIFICATIONS AND REQUIREMENTS.

D. ALL DIMENSIONS ARE REFERENCED TO FACE OF FINISH U.N.O.

E. ALL HEIGHT REFERENCES ARE TAKEN FROM FLOOR FINISH FOR AREA INDICATED.

F. PROVIDE SOLID BLOCKING FOR ALL 'J' BOXES SUSPENDED LIGHT AND CEILING FAN FIXTURES, TELEVISION SUPPORT, ARTIFACT SHELVES AND ANY OTHER CEILING MOUNTED EQUIPMENT.

G. ALL ACOUSTIC TILE JOINT LINES TO BE ALIGNED & COORDINATED FOR FIXTURE PLACEMENT, AVOIDING LESS THAN 1/2 OF A TILE AROUND THE PERIMETER WHEREVER POSSIBLE.

H. PROVIDE SEISMIC BRACING FOR SUSPENDED CEILINGS. SEE 4/A0.1

I. ALL EXPOSED CONDUITS AND 'J' BOXES SHALL BE PAINTED TO MATCH THE ADJACENT FINISH U.N.O.

J. ANY LIGHT NOT DIMENSIONALLY LOCATED TO BE CENTERED IN THE CEILING TILE, CEILING AREA, OR ROOM AS APPLICABLE. ALL "CAN" TYPE FIXTURES TO BE MOUNTED IN THE CENTER OF THE CEILING TILES UNLESS NOTED OTHERWISE.

K. PAINT ALL EXPOSED DUCTWORK TO MATCH CEILING.

L. PROVIDE 2x6 WOOD FRAMING FOR GYP. CEILINGS

M. PATCH AND REPAIR EXISTING & NEW ADJACENT SURFACES FOR AFLOATED SEAMLESS AND SMOOTH TRANSITIONS.

REFLECTED CEILING LEGEND:

ACT — CEILING MATERIAL
8'-0" — CEILING HEIGHT
NOTES — ADDITIONAL NOTES

CEILING LEGEND :

(E) GYP CEILING

(N) GYP CEILING
GYP

(N) SUSPENDED ACOUSTICAL CEILING TILE
ACT2

(N) DIRECT APPLIED ACOUSTICAL CEILING TILE
ACT3

(N) CEMENT BOARD SOFFIT
CB1

EXISTING CEILING

HATCH INDICATES ITEM IS PART OF REMODEL SCOPE OF WORK AND NOT SEISMIC RETROFIT RELATED. ALL BIDS SHALL CONTAIN SEPARATE LINE-ITEM PRICING THAT DISTINGUISHES REMODEL RELATED SCOPE OF WORK FROM SEISMIC RELATED SCOPE OF WORK.

LIGHTING - SEE ELECTRICAL

HVAC REGISTERS - SEE MECHANICAL

EXIT SIGN

CEILING FINISHES

EX — EXISTING CEILING, SEE ADDITIONAL NOTES
VS — VENTED CEMENT BOARD, SEE FINISH SCHD.

CEILING HEIGHT

VAR — VARIES
M.E. — MATCH EXISTING

ADDITIONAL NOTES

1. PAINT CEILING TO MATCH (E)
2. PAINT PT-X
3. INSTALL GYP TIGHT TO STRUCTURE
4. PROVIDE 2x6 CEILING FRAMING @ 16" O.C.
5. PAINT PT-X
6. PAINT CEILING ENTIRELY

RCP KEYNOTES

A. **KEYNOTE (A) INDICATES ITEM IS PART OF REMODEL SCOPE AND NOT SEISMIC RETROFIT RELATED. PROVIDE SEPARATE BIDS FOR REMODEL AND SEISMIC RETROFIT SCOPES OF WORK.**

1. (N) WALL MOUNTED FLASHING BEACON, BOD: FEDERAL SIGNAL PRO LED BEACON, TALL DOME, PROVIDE BRANCH GUARD ACCESSORY

2. (N) LIGHT FIXTURE, SEE ELECT.

3. (N) POST, SEE STRUCT., WRAP PER DETAIL 3/A9.3

4. (N) BEAM, WRAP PER DETAIL 3/A9.3

5. (N) EXPOSED DUCT, PAINT PTX, SEE MECH.

6. REINSTALL (E) DUCT. SEE MECH.

ZCS ENGINEERING ARCHITECTURE
127 NW D Street, Grants Pass, Oregon 97526 | 541-479-3865

REEDSPORT FIRE DISTRICT
124 N 4TH ST.
REEDSPORT, OR 97467

REEDSPORT FIRE STATION 7

REGISTERED ARCHITECT
Jacob Zander
OREGON CITY, OR
12412
STATE OF OREGON

△	DATE:	Description
2	Date 2	REV 2

PROJECT NO.	G-1468-21
DRAWN:	MJC,PWR,TBS
CHECKED:	JEZ
DATE:	01-24-23

SECOND FLOOR RCP

A2.2

95% CONSTRUCTION DOCUMENTS | BID / PERMIT SET

ONE INCH EQUALS FULL SCALE 4/25/2023 2:13:04 PM

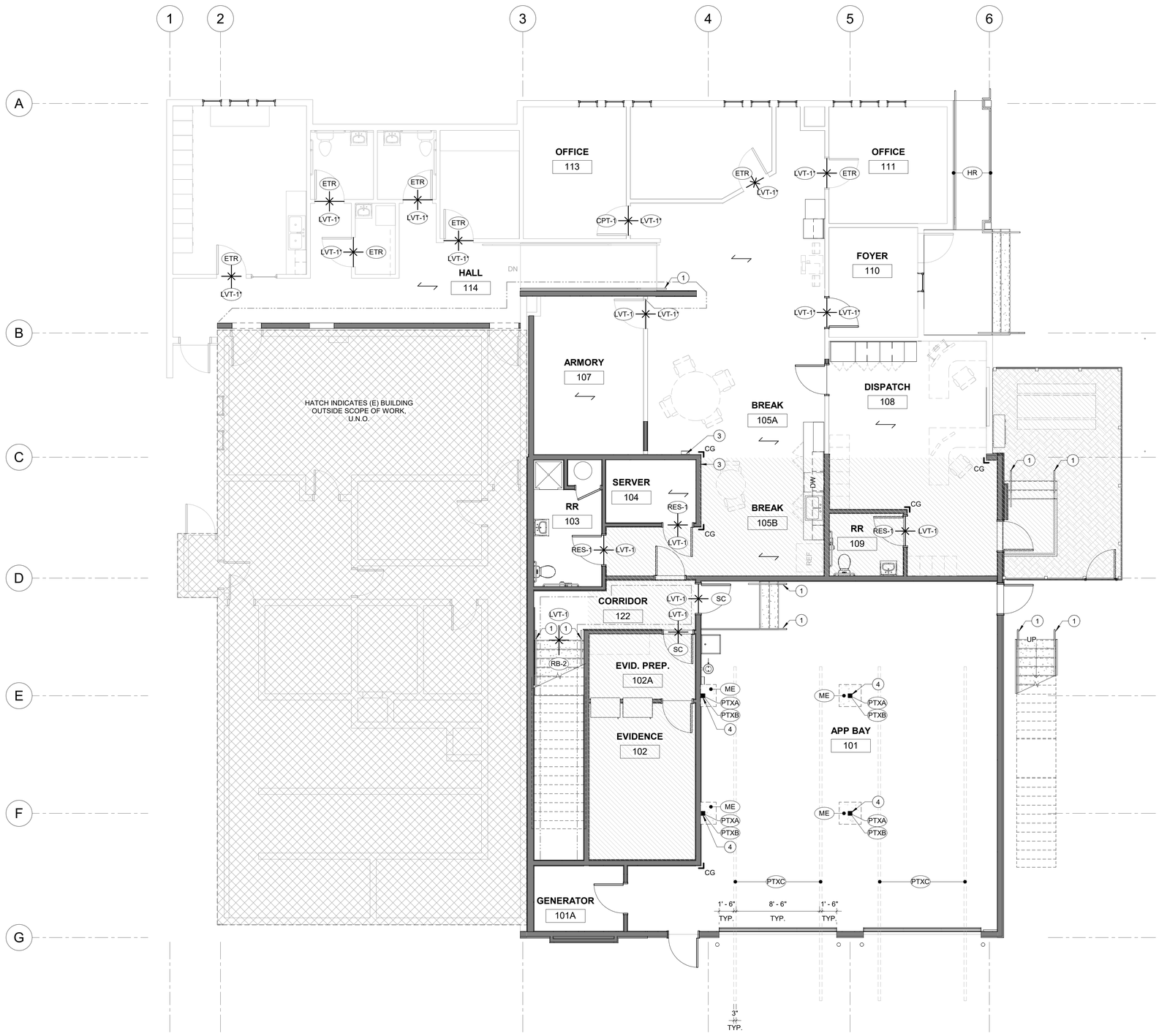

1 A3.1 FIRST FLOOR FINISH PLAN
3/16" = 1'-0"

ONE INCH EQUALS FULL SCALE 4/25/2023 2:13:07 PM

GENERAL FINISH NOTES:

A. ALL PRODUCTS ARE TO BE INSTALLED PER MANUFACTURERS INSTRUCTIONS, USING MANUFACTURERS ADHESIVES, TOOLS AND METHODS.
B. REFER TO SPECIFICATIONS AND FINISH SCHEDULES ON A0.3 FOR FURTHER FINISH MATERIAL PRODUCT INFORMATION.
C. SEE ELEVATIONS FOR ADDITIONAL FINISH INFORMATION.
D. FOR CEILING HEIGHTS AND ADDITIONAL FINISHES SEE RCP'S
E. COORDINATE ALL OWNER FURNISHED EQUIPMENT, ACCESSORIES, AND FURNITURE WITH OWNER.
F. FIELD VERIFY ALL DIMENSIONS PRIOR TO FABRICATION.
G. ALL FLOOR TRANSITIONS ARE TO OCCUR DIRECTLY BENEATH DOOR UNLESS NOTED OTHERWISE.
H. ALL FLOOR TRANSITIONS ARE TO BE ADA COMPLIANT.
I. PROVIDE APPROPRIATE TRANSITIONS STRIPS/REDUCERS AT ALL LOCATIONS BETWEEN DIFFERING MATERIALS UNLESS NOTED OTHERWISE. SEE SHEET A9.6 FOR TRANSITION DETAILS. ALL TRANSITIONS TO MEET ADA REQUIREMENTS.
J. REFER TO FINISH PLAN FOR LOCATION OF CORNER GUARDS. ALL CORNER GUARDS ARE TO BE INSTALLED WITH BOTTOM OF CORNER GUARD AT TOP OF WALL BASE AND EXTEND 48" AFF.
K. ALL GYPSUM CEILING AND SOFFITS TO BE PAINTED **PTC** UNLESS OTHERWISE NOTED.
L. ALL HOLLOW METAL FRAMES TO RECEIVE HPC COLOR: **PT3** - UNLESS OTHERWISE NOTED.
M. ALL METAL ACCESS PANELS, COVER PLATES, VENTS AND GRILLES TO BE PAINTED TO MATCH THE SURFACE IT IS LOCATED ON, UNLESS PREFINISHED.
N. ALL BASE CABINETS AND UPPER CABINETS ARE TO RECEIVE PLASTIC LAMINATE ON ALL EXPOSED EXTERIOR SURFACES AS INDICATED ON INTERIOR ELEVATIONS. ALL INTERIOR SURFACES TO RECEIVE WHITE MELAMINE ON ALL CONCEALED SURFACES. RUN WOOD GRAIN IN VERTICAL DIRECTIONS AND USE 0.020"THICK MATCHING VINYL EDGEBAND ON CABINET DOORS AND DRAWERS.
O. PAINT VISIBLE PORTION OF INSIDE OF DUCT WORK FLAT BLACK.
P. INSTALL (N) 1/4" APA PLYWOOD UNDERLAYMENT OVER ALL EXISTING WOOD SUBFLOORS TO RECEIVE (N) FINISHES. INSTALL WITH SCREWS 2" O.C. AT PERIMETER AND 4" ACROSS FIELD. OFFSET PANELS 12" MIN.

FINISH LEGEND

INSTALLATION DIRECTION OF FLOORING

FLOORING TRANSITION

(PT#) EXTENT OF ACCENT PAINT OR WALL FINISHES

LOCATION OF CORNER GUARDS

(X) FINISH TAG

HATCH INDICATES ITEM IS PART OF REMODEL SCOPE OF WORK AND NOT SEISMIC RETROFIT RELATED. ALL BIDS SHALL INCLUDE SEPARATE LINE-ITEM PRICING THAT DISTINGUISHES REMODEL RELATED SCOPE OF WORK FROM SEISMIC RELATED SCOPE OF WORK.

(#) FINISH ABBREVIATIONS

ETR	EXISTING TO REMAIN
CB2	CEMENT BOARD PANEL RAINSCREEN
WC	WOOD COMPOSITE RAINSCREEN
LP1	LAP SIDING
RB-1	RUBBER BASE
RB-2	RUBBER STAIR TREAD
PT#	PAINT PER FINISH SCHEDULE
LVT-1	LUXARY VINYL TILE * INDICATES PATCHING FLOOR FINISH IN SELECT AREAS WHERE DEMOLITION HAS OCCURED, SEE DEMO FLOOR PLAN FOR EXTENT
CPT	CARPET TILE

(#) FINISH KEYNOTES

1. (N) HANDRAIL, SEE STAIR & RAMP PLAN
2. (N) 4' X 8' WHITEBOARD, MOUNT 48" A.F.F., BOD: CLARIDGE SERIES 2000 MARKERBOARD
3. (N) 4' X 6' TACKBOARD, 48" A.F.F., BOD: CLARIDGE 960A
4. PAINT (N) APP BAY POSTS PTXA TO 48" A.F.F. AND PTXB ABOVE 48". SEE SECTION 1/A7.0

ZCS ENGINEERING ARCHITECTURE
127 NW D Street, Grants Pass, Oregon 97526 | 541-479-3865

REEDSPORT FIRE DISTRICT
124 N 4TH ST.
REEDSPORT, OR 97467

REEDSPORT FIRE STATION 7

REEDSPORT FIRE DEPT. VOLUNTEER

REGISTERED ARCHITECT Jacob Zander OREGON CITY, OR 12412 STATE OF OREGON

△	DATE:	Description
2	Date 2	REV 2

PROJECT NO.	G-1468-21
DRAWN:	MJC,PWR,TBS
CHECKED:	JEZ
DATE:	01-24-23

FIRST FLOOR FINISH PLAN

A3.1

95% CONSTRUCTION DOCUMENTS | BID / PERMIT SET

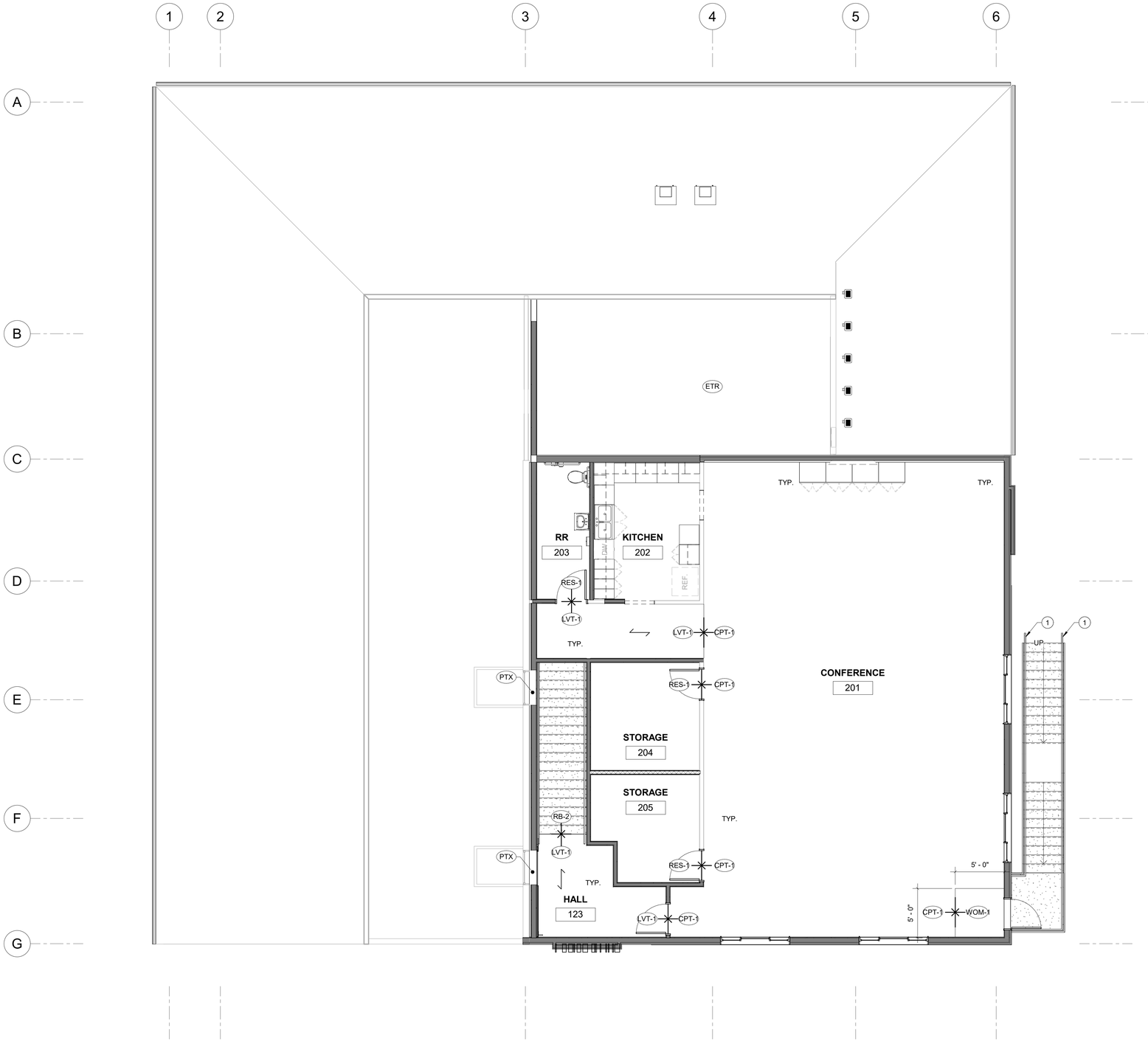

1 A3.2 SECOND FLOOR FINISH PLAN
3/16" = 1'-0"

GENERAL FINISH NOTES:

A. ALL PRODUCTS ARE TO BE INSTALLED PER MANUFACTURERS INSTRUCTIONS, USING MANUFACTURERS ADHESIVES, TOOLS AND METHODS.
B. REFER TO SPECIFICATIONS AND FINISH SCHEDULES ON A0.3 FOR FURTHER FINISH MATERIAL PRODUCT INFORMATION.
C. SEE ELEVATIONS FOR ADDITIONAL FINISH INFORMATION.
D. FOR CEILING HEIGHTS AND ADDITIONAL FINISHES SEE RCP'S
E. COORDINATE ALL OWNER FURNISHED EQUIPMENT, ACCESSORIES, AND FURNITURE WITH OWNER.
F. FIELD VERIFY ALL DIMENSIONS PRIOR TO FABRICATION.
G. ALL FLOOR TRANSITIONS ARE TO OCCUR DIRECTLY BENEATH DOOR UNLESS NOTED OTHERWISE.
H. ALL FLOOR TRANSITIONS ARE TO BE ADA COMPLIANT.
I. PROVIDE APPROPRIATE TRANSITIONS STRIPS/REDUCERS AT ALL LOCATIONS BETWEEN DIFFERING MATERIALS UNLESS NOTED OTHERWISE. SEE SHEET A9.6 FOR TRANSITION DETAILS. ALL TRANSITIONS TO MEET ADA REQUIREMENTS.
J. REFER TO FINISH PLAN FOR LOCATION OF CORNER GUARDS. ALL CORNER GUARDS ARE TO BE INSTALLED WITH BOTTOM OF CORNER GUARD AT TOP OF WALL BASE AND EXTEND 48" AFF.
K. ALL GYPSUM CEILING AND SOFFITS TO BE PAINTED **PTC** UNLESS OTHERWISE NOTED.
L. ALL HOLLOW METAL FRAMES TO RECEIVE HPC COLOR: **PT3** - UNLESS OTHERWISE NOTED.
M. ALL METAL ACCESS PANELS, COVER PLATES, VENTS AND GRILLES TO BE PAINTED TO MATCH THE SURFACE IT IS LOCATED ON, UNLESS PREFINISHED.
N. ALL BASE CABINETS AND UPPER CABINETS ARE TO RECEIVE PLASTIC LAMINATE ON ALL EXPOSED EXTERIOR SURFACES AS INDICATED ON INTERIOR ELEVATIONS. ALL INTERIOR SURFACES TO RECEIVE WHITE MELAMINE ON ALL CONCEALED SURFACES. RUN WOOD GRAIN IN VERTICAL DIRECTIONS AND USE 0.020"THICK MATCHING VINYL EDGEBAND ON CABINET DOORS AND DRAWERS.
O. PAINT VISIBLE PORTION OF INSIDE OF DUCT WORK FLAT BLACK.
P. INSTALL (N) 1/4" APA PLYWOOD UNDERLAYMENT OVER ALL EXISTING WOOD SUBFLOORS TO RECEIVE (N) FINISHES. INSTALL WITH SCREWS 2" O.C. AT PERIMETER AND 4" ACROSS FIELD. OFFSET PANELS 12" MIN.

FINISH LEGEND

INSTALLATION DIRECTION OF FLOORING

FLOORING TRANSITION

(PT#) EXTENT OF ACCENT PAINT OR WALL FINISHES

L LOCATION OF CORNER GUARDS

(X) FINISH TAG

HATCH INDICATES ITEM IS PART OF REMODEL SCOPE OF WORK AND NOT SEISMIC RETROFIT RELATED. ALL BIDS SHALL INCLUDE SEPARATE LINE-ITEM PRICING THAT DISTINGUISHES REMODEL RELATED SCOPE OF WORK FROM SEISMIC RELATED SCOPE OF WORK.

(#) FINISH ABBREVIATIONS

ETR	EXISTING TO REMAIN
CB2	CEMENT BOARD PANEL RAINSCREEN
WC	WOOD COMPOSITE RAINSCREEN
LP1	LAP SIDING
RB-1	RUBBER BASE
RB-2	RUBBER STAIR TREAD
PT#	PAINT PER FINISH SCHEDULE
LVT-1	LUXARY VINYL TILE * INDICATES PATCHING FLOOR FINISH IN SELECT AREAS WHERE DEMOLITION HAS OCCURED, SEE DEMO FLOOR PLAN FOR EXTENT
CPT	CARPET TILE

(#) FINISH KEYNOTES

1. (N) HANDRAIL, SEE STAIR & RAMP PLAN
2. (N) 4' X 8' WHITEBOARD, MOUNT 48" A.F.F., BOD: CLARIDGE SERIES 2000 MARKERBOARD
3. (N) 4' X 6' TACKBOARD, 48" A.F.F., BOD: CLARIDGE 960A
4. PAINT (N) APP BAY POSTS PTXA TO 48" A.F.F. AND PTXB ABOVE 48". SEE SECTION 1/A7.0

ZCS ENGINEERING ARCHITECTURE
127 NW D Street, Grants Pass, Oregon 97526 | 541-479-3865

REEDSPORT FIRE DISTRICT
124 N 4TH ST.
REEDSPORT, OR 97467

REEDSPORT FIRE STATION 7

REGISTERED ARCHITECT Jacob Zander OREGON CITY, OR 12412 STATE OF OREGON

△	DATE:	Description
2	Date 2	REV 2

PROJECT NO.	G-1468-21
DRAWN:	MJC,PWR,TBS
CHECKED:	JEZ
DATE:	01-24-23

SECOND FLOOR FINISH PLAN

A3.2

95% CONSTRUCTION DOCUMENTS | BID / PERMIT SET

ONE INCH EQUALS FULL SCALE 4/25/2023 2:13:08 PM

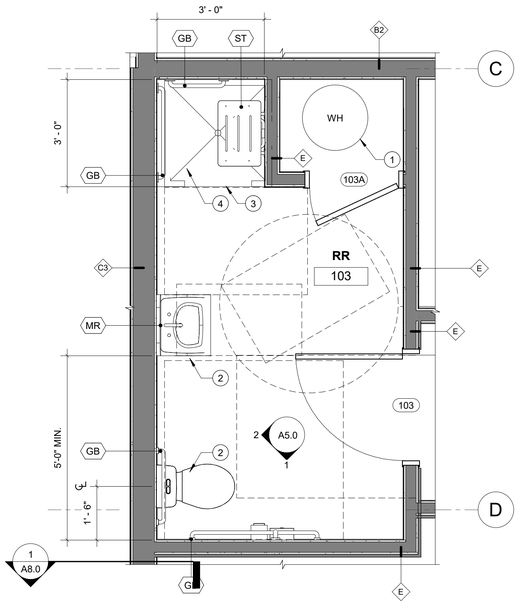

1 A4.0 ENLARGED PLAN - RR 103
1/2" = 1'-0"

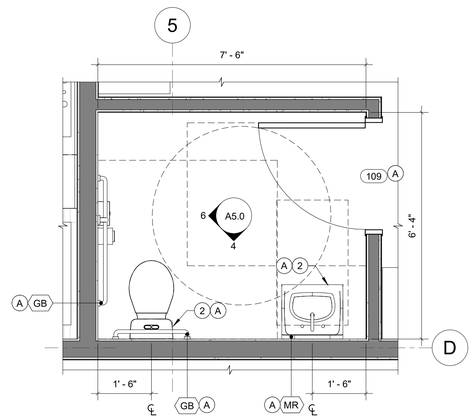

2 A4.0 ENLARGED PLAN - RR 203
1/2" = 1'-0"

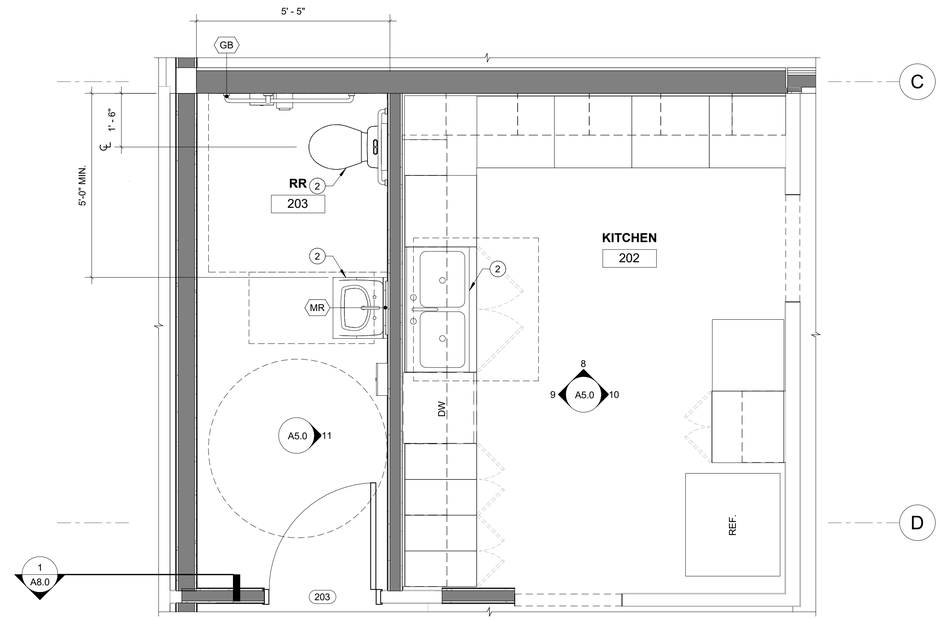

3 A4.0 ENLARGED PLAN - RR 203
1/2" = 1'-0"

RESTROOM ACCESSORIES

CODE	ACCESSORY	MANUFACTURER	MODEL NUMBER	STYLE / FINISH	SIZE	INSTALLATION NOTES
GB	ADA COMPLIANT GRAB BARS	BOBRICK	B-6806 X18, X36, X42	304 - STAINLESS W/ SATIN-FINISH	18" L, 36" L, 42" L	PROVIDE HORIZONTAL & VERTICAL GBs PER 1/G2.0 & 2/G2.0
MR	MIRROR - TEMPERED	BOBRICK	B-2908 1830	304 - STAINLESS W/ SATIN-FINISH	18" W, 30" H	-
ST	ADA COMPLIANT SHOWER SEAT	BOBRICK	B-5191	304 - STAINLESS W/ SATIN-FINISH	18" W, 15 13/16" D	SEE 2/G2.0

FINISH ABBREVIATIONS

ETR	EXISTING TO REMAIN
CB2	CEMENT BOARD PANEL RAINSCREEN
WC	WOOD COMPOSITE RAINSCREEN
LP1	LAP SIDING
RB-1	RUBBER BASE
RB-2	RUBBER STAIR TREAD
PT#	PAINT PER FINISH SCHEDULE
LVT-1	LUXARY VINYL TILE * INDICATES PATCHING FLOOR FINISH IN SELECT AREAS WHERE DEMOLITION HAS OCCURED, SEE DEMO FLOOR PLAN FOR EXTENT
CPT	CARPET TILE

GENERAL NOTES

A. REFER TO SHEET G2.0 FOR ADA MOUNTING LOCATIONS.

B. VERIFY DIMENSIONS PRIOR TO INSTALLATION.

PLAN KEYNOTES

A. **KEYNOTE (A) INDICATES ITEM IS PART OF REMODEL SCOPE AND NOT SEISMIC RETROFIT RELATED. PROVIDE SEPARATE BIDS FOR REMODEL AND SEISMIC RETROFIT SCOPES OF WORK.**

1. REINSTALL (E) WATER HEATER
2. (N) PLUMBING FIXTURE, SEE PLUMBING. *NOTE: ITEM NOT INCLUDED IN SEISMIC RETROFIT SCOPE.*
3. (N) ROLL-IN SHOWER, SEE PLUMBING.
4. (N) ADA COMPLIANT FOLD DOWN SHOWER SEAT, SEE SCHD.

ZCS ENGINEERING ARCHITECTURE
127 NW D Street, Grants Pass, Oregon 97526 | 541-479-3865

REEDSPORT FIRE DISTRICT
124 N 4TH ST.
REEDSPORT, OR 97467

REEDSPORT FIRE STATION 7

REEDSPORT FIRE DEPT. VOLUNTEER

REGISTERED ARCHITECT Jacob Zander OREGON CITY, OR 12412 STATE OF OREGON

△	DATE:	Description
2	Date 2	REV 2

PROJECT NO. G-1468-21
DRAWN: MJC,PWR,TBS
CHECKED: JEZ
DATE: 01-24-23

ENLARGED PLANS & RESTROOM ACCESSORIES

A4.0

95% CONSTRUCTION DOCUMENTS | BID / PERMIT SET

ONE INCH EQUALS FULL SCALE 4/25/2023 2:13:09 PM

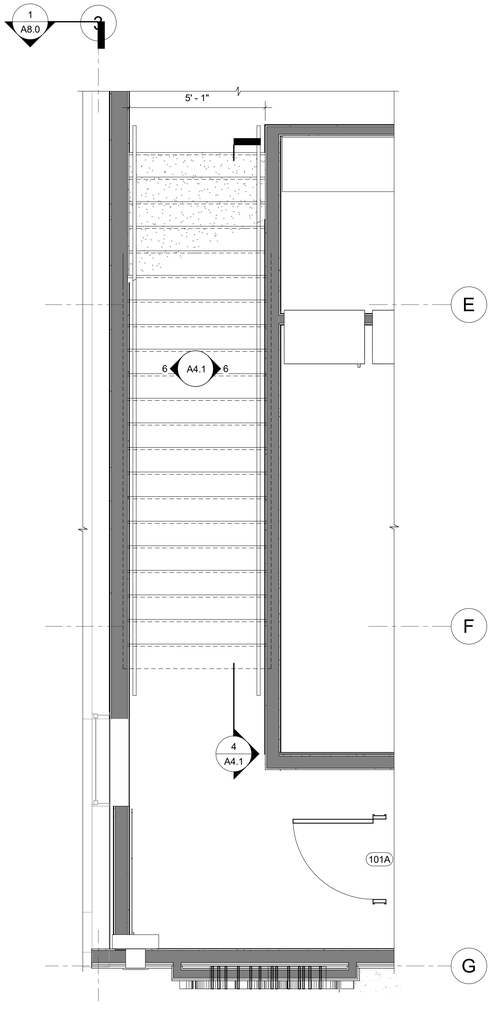

1 A4.1 ENLARGED STAIR PLAN - INTERIOR
3/8" = 1'-0"

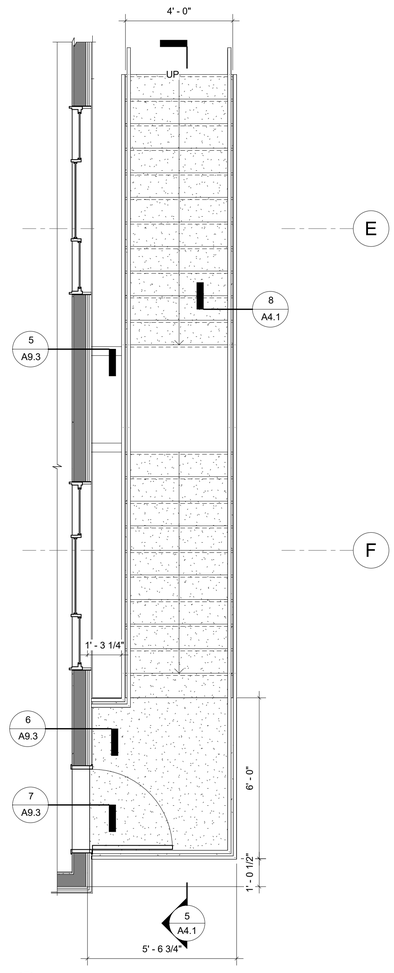

2 A4.1 EXTERIOR STAIR PLAN
3/8" = 1'-0"

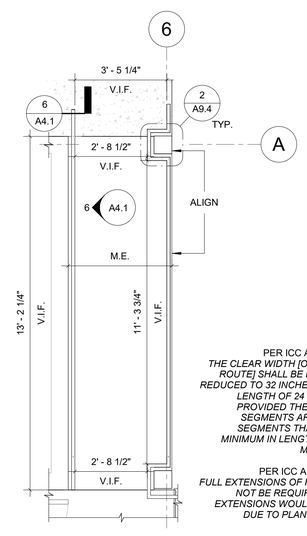

PER ICC A117-2009 403.5(E), *THE CLEAR WIDTH [OF AN ACCESSIBLE ROUTE] SHALL BE PERMITTED TO BE REDUCED TO 32 INCHES MINIMUM FOR A LENGTH OF 24 INCHES MAXIMUM PROVIDED THE REDUCED WIDTH SEGMENTS ARE SEPARATED BY SEGMENTS THAT ARE 48 INCHES MINIMUM IN LENGTH AND 36 INCHES MINIMUM IN WIDTH.*

PER ICC A117-2009 505.10(3), *FULL EXTENSIONS OF HANDRAILS SHALL NOT BE REQUIRED WHERE SUCH EXTENSIONS WOULD BE HAZARDOUS DUE TO PLAN CONFIGURATION.*

3 A4.1 RAMP PLAN
3/8" = 1'-0"

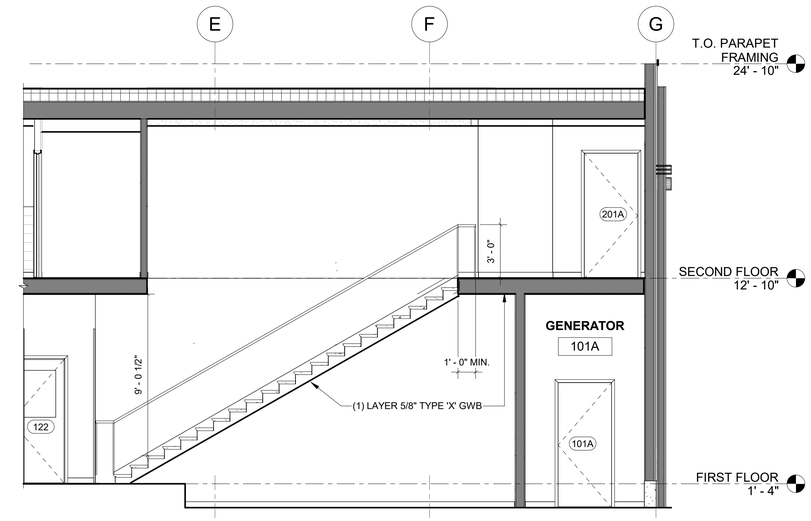

4 A4.1 STAIR SECTION - INTERIOR
1/4" = 1'-0"

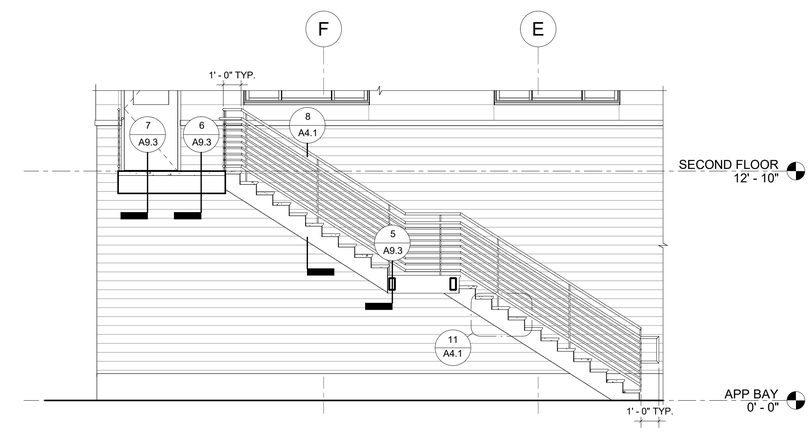

5 A4.1 STAIR SECTION - EXTERIOR
1/4" = 1'-0"

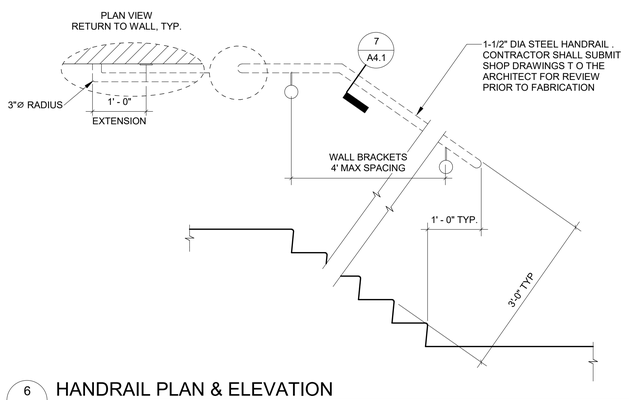

6 A4.1 HANDRAIL PLAN & ELEVATION
3/4" = 1'-0"

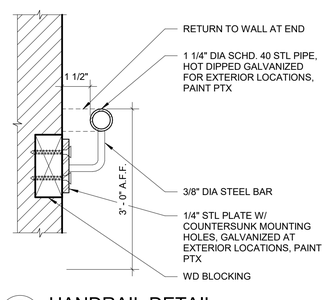

7 A4.1 HANDRAIL DETAIL
3" = 1'-0"

NOTE: ALL EXTERIOR STEEL TO BE GALVANIZED AND PAINTED PT10, U.N.O.

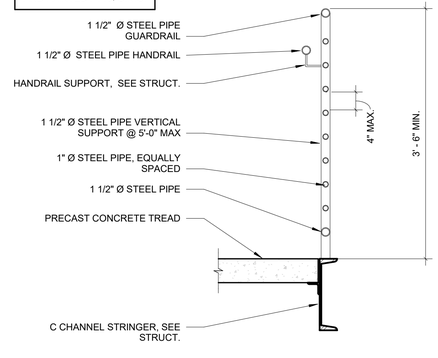

8 A4.1 GUARDRAIL DETAIL
1" = 1'-0"

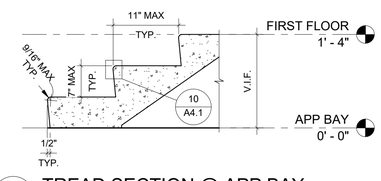

9 A4.1 TREAD SECTION @ APP BAY
1" = 1'-0"

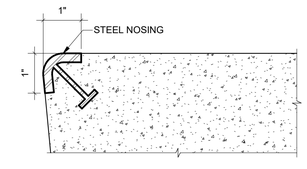

10 A4.1 CONCRETE TREAD NOSING
6" = 1'-0"

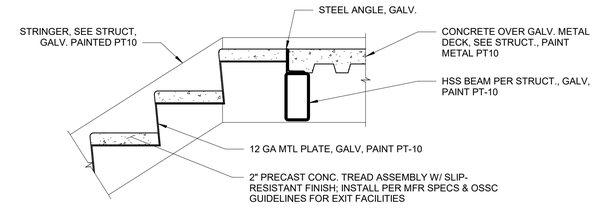

11 A4.1 TREAD SECTION @ EGRESS
1" = 1'-0"

ONE INCH EQUALS FULL SCALE 4/25/2023 2:13:13 PM

ZCS ENGINEERING ARCHITECTURE
127 NW D Street, Grants Pass, Oregon 97526 | 541-479-3865

REEDSPORT FIRE DISTRICT
124 N 4TH ST.
REEDSPORT, OR 97467

REEDSPORT FIRE STATION 7

REGISTERED ARCHITECT Jacob Zander OREGON CITY, OR 12412 STATE OF OREGON

△	DATE:	Description
2	Date 2	REV 2

PROJECT NO.	G-1468-21
DRAWN:	MJC,PWR,TBS
CHECKED:	JEZ
DATE:	01-24-23

STAIR & RAMP PLANS & SECTIONS

A4.1

95% CONSTRUCTION DOCUMENTS | BID / PERMIT SET

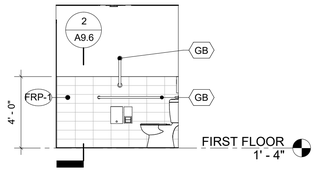

1 A5.0 RR 103 - S ELEVATION
1/4" = 1'-0"

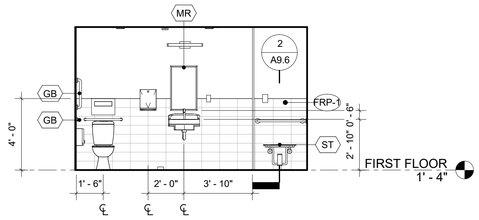

2 A5.0 RR 103 - W ELEVATION
1/4" = 1'-0"

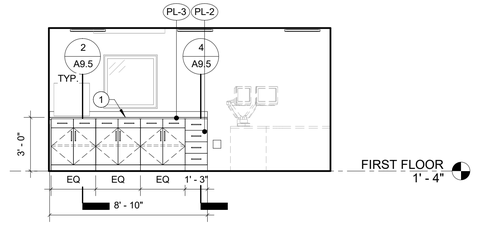

3 A5.0 108 DISPATCH - N ELEVATION
1/4" = 1'-0"

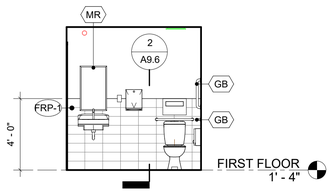

4 A5.0 109 RR - SOUTH ELEVATION
1/4" = 1'-0"

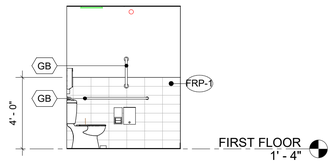

6 A5.0 109 RR - W ELEVATION
1/4" = 1'-0"

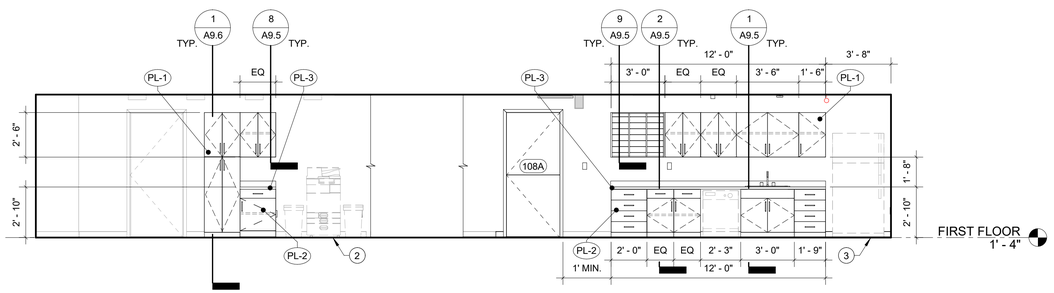

7 A5.0 105 BREAK ROOM - E ELEVATION
1/4" = 1'-0"

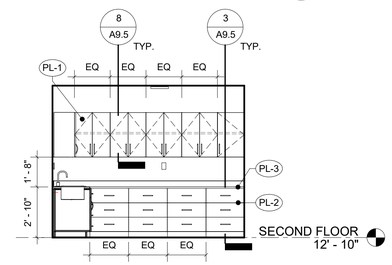

8 A5.0 202 KITCHEN - N ELEVATION
1/4" = 1'-0"

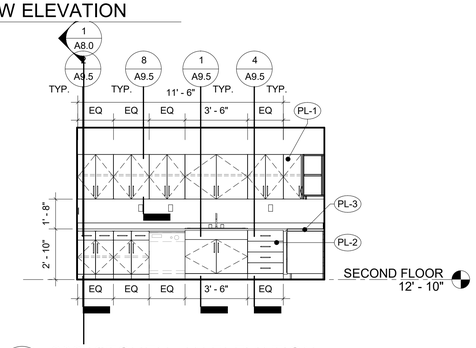

9 A5.0 202 KITCHEN - W ELEVATION
1/4" = 1'-0"

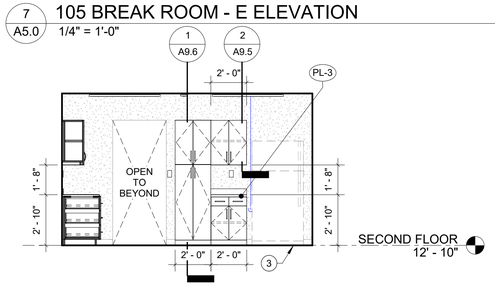

10 A5.0 202 KITCHEN - E ELEVATION
1/4" = 1'-0"

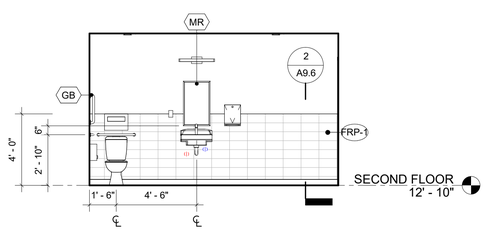

11 A5.0 RR 203 - E ELEVATION
1/4" = 1'-0"

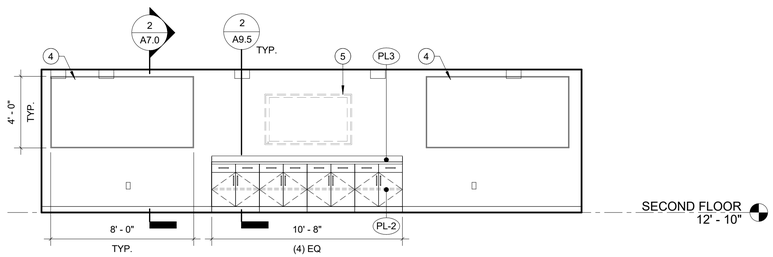

13 A5.0 201 CONFERENCE ROOM - N ELEVATION
1/4" = 1'-0"

INT. ELEVATION GENERAL NOTES

A. ALL NEW PAINT TO MATCH EXISTING OR ADJACENT SIMILAR SURFACES. FEATHER ALL TRANSITIONS FOR A SEAMLESS EDGE.

B. SEE DETAIL 6/A9.4 FOR CABINETRY DOOR DESIGN.

C. SEE FINISH SUMMARY FOR FINISHES & MATERIAL INFORMATION.

D. EXISTING ELECTRICAL OUTLETS & SWITCHES TO BE RELOCATED TO THE FACE OF NEW PANELS.

E. REFER TO TYP. MOUNTING HEIGHTS & ADA DIMENSIONAL STANDARDS ON G2.0.

F. VERIFY ALL FIRE EXTINGUISHER LOCATIONS WITH FIRE CODE OFFICIAL PRIOR TO INSTALL.

G. SEE HM FRAME & STOREFRONT TYPES ON A0.2.

H. ALL TACKBOARDS & MARKERBOARDS ALIGN W/ T.O. DOOR FRAMES, U.N.O.

I. VERIFY FINAL LOCATIONS OF TELEVISION MONITORS & MARKERBOARDS W/ OWNER PRIOR TO INSTALL.

J. ALL WET WALLS TO HAVE TILE OR EPOXY PAINT, U.N.O.

K. ALL WALLS TO BE PAINTED PT-1.

L. PROVIDE IN-WALL BLOCKING FOR ALL WALL-MOUNTED EQUIPMENT & CASEWORK.

INT. ELEVATION KEYNOTES

1. PROVIDE GROMMET HOLE IN CASEWORK FOR ELEC.
2. (E) PRINTER & PAPER SHREDDERS
3. REFRIGERATOR, OFCI
4. MARKERBOARD, OFCI
5. TELEVISION, OFCI
6. SPACE FOR GRAPHIC IMAGES
7. (E) ELECTRICAL PANEL TO REMAIN

ZCS
ENGINEERING
ARCHITECTURE
127 NW D Street, Grants Pass, Oregon 97526 | 541-479-3865

REEDSPORT FIRE DISTRICT
124 N 4TH ST.
REEDSPORT, OR 97467

REEDSPORT FIRE STATION 7

REEDSPORT FIRE DEPT. VOLUNTEER

REGISTERED ARCHITECT
Jacob Zander
OREGON CITY, OR
12412
STATE OF OREGON

△	DATE:	Description
2	Date 2	REV 2

PROJECT NO.	G-1468-21
DRAWN:	MJC,PWR,TBS
CHECKED:	JEZ
DATE:	01-24-23

INTERIOR ELEVATIONS

A5.0

95% CONSTRUCTION DOCUMENTS | BID / PERMIT SET

ONE INCH EQUALS FULL SCALE 4/25/2023 2:13:16 PM

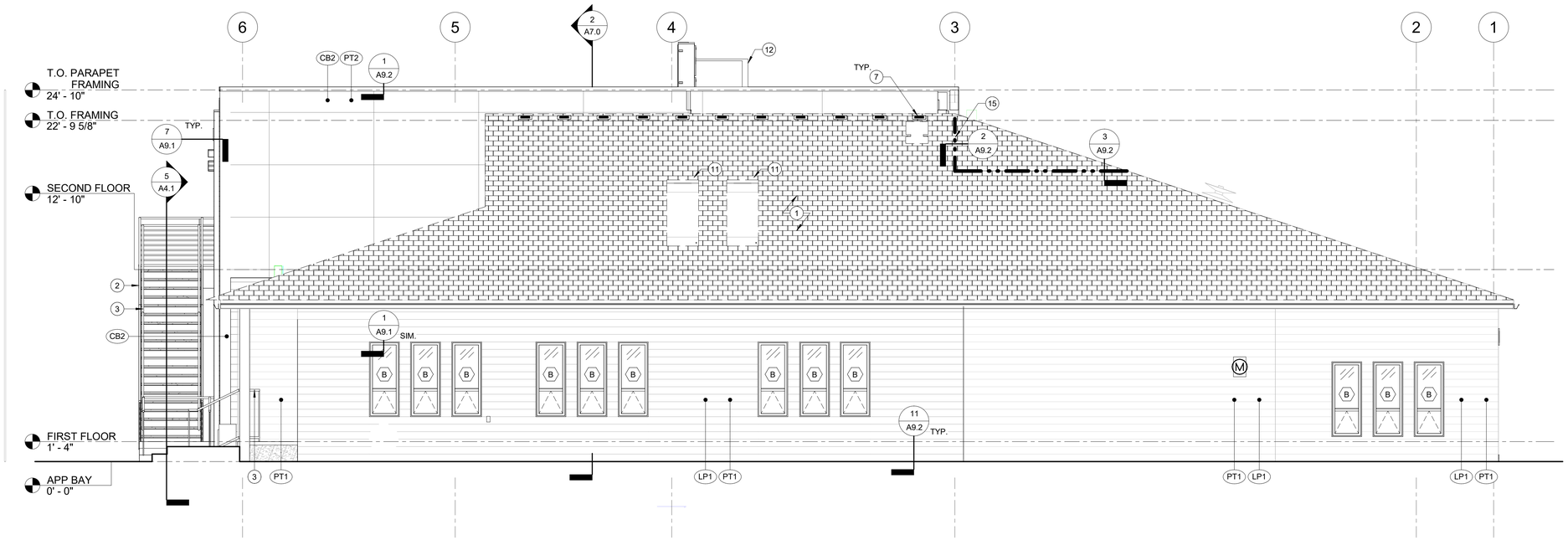

2 A6.0 NORTH ELEVATION
1/4" = 1'-0"

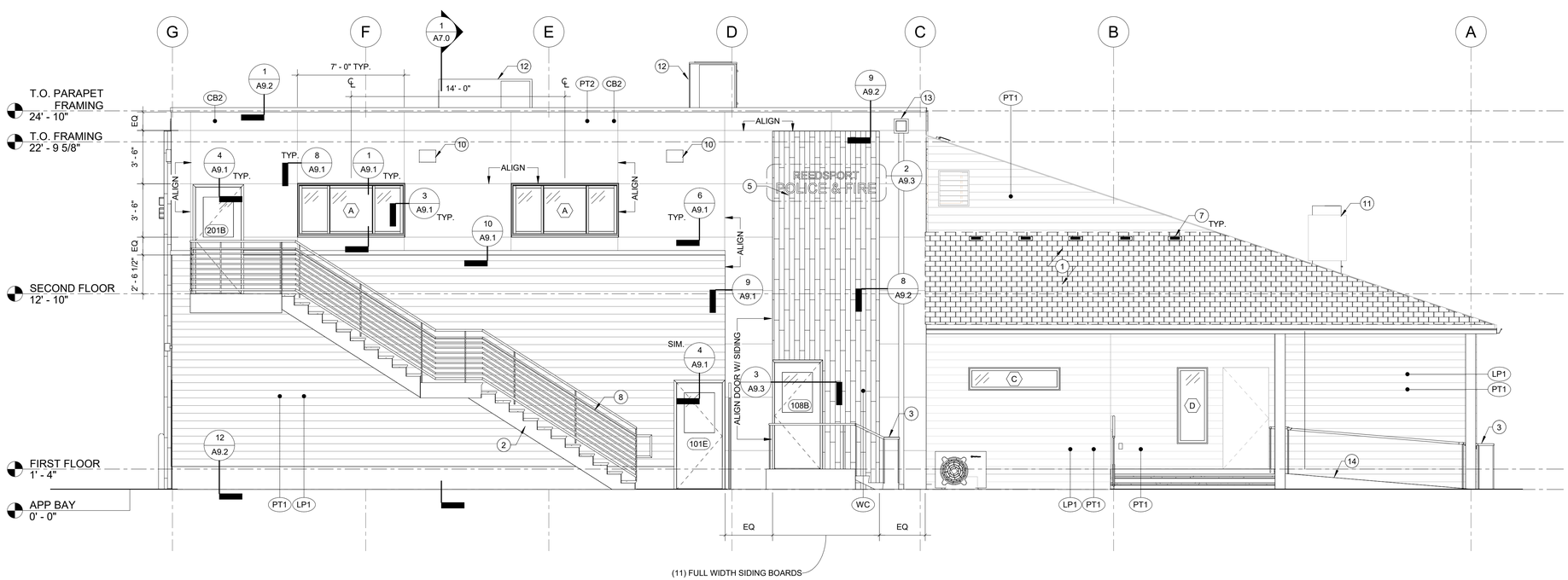

1 A6.0 EAST ELEVATION
1/4" = 1'-0"

ONE INCH EQUALS FULL SCALE 4/25/2023 2:13:21 PM

ELEVATION LEGEND

- (N) LAP SIDING **LP** OR TONGUE AND GROOVE **TG**
- (N) CEMENT BOARD SIDING **CB2**
- (N) WOOD COMPOSITE **WC**
- X — FINISH TAG *SEE FINISH SCHEDULE

ELEVATION KEYNOTES

1. (N) ROOFING
2. (N) GALVANIZED AND PAINTED STEEL STAIRS, SEE STRUCT
3. (N) GALVANIZED AND PAINTED HANDRAIL
4. (E) PROPANE TANK, BRACE PER STRUCT.
5. (N) SIGNAGE
6. (N) WALL MOUNTED FLASHING BEACON, SEE ELECT. NOT INCLUDED IN SEISMIC RETROFIT SCOPE
7. (N) ROOF VENT
8. (N) GUARDRAIL
9. (E) ROOFING TO REMAIN
10. (N) LIGHTING, SEE ELEC.
11. (E) MECH. UNIT
12. (N) MECH. UNIT, SEE MECH.
13. (N) DOWNSPOUT, PAINT TO MATCH WALL
14. (N) RAMP
15. (N) SEISMIC JOINT. SEE ROOF PLAN FOR MORE INFORMATION; SEE STRUCT.

FINISH ABBREVIATIONS

ETR	EXISTING TO REMAIN
CB2	CEMENT BOARD PANEL RAINSCREEN
WC	WOOD COMPOSITE RAINSCREEN
LP1	LAP SIDING
RB-1	RUBBER BASE
RB-2	RUBBER STAIR TREAD
PT#	PAINT PER FINISH SCHEDULE
LVT-1	LUXARY VINYL TILE * INDICATES PATCHING FLOOR FINISH IN SELECT AREAS WHERE DEMOLITION HAS OCCURED, SEE DEMO FLOOR PLAN FOR EXTENT
CPT	CARPET TILE

ZCS ENGINEERING ARCHITECTURE
127 NW D Street, Grants Pass, Oregon 97526 | 541-479-3865

REEDSPORT FIRE DISTRICT
124 N 4TH ST.
REEDSPORT, OR 97467

REEDSPORT FIRE STATION 7

REEDSPORT FIRE DEPT. VOLUNTEER

REGISTERED ARCHITECT Jacob Zander OREGON CITY, OR 12412 STATE OF OREGON

△	DATE:	Description

PROJECT NO.	G-1468-21
DRAWN:	MJC,PWR,TBS
CHECKED:	JEZ
DATE:	01-24-23

EXTERIOR ELEVATIONS

A6.0

95% CONSTRUCTION DOCUMENTS | BID / PERMIT SET

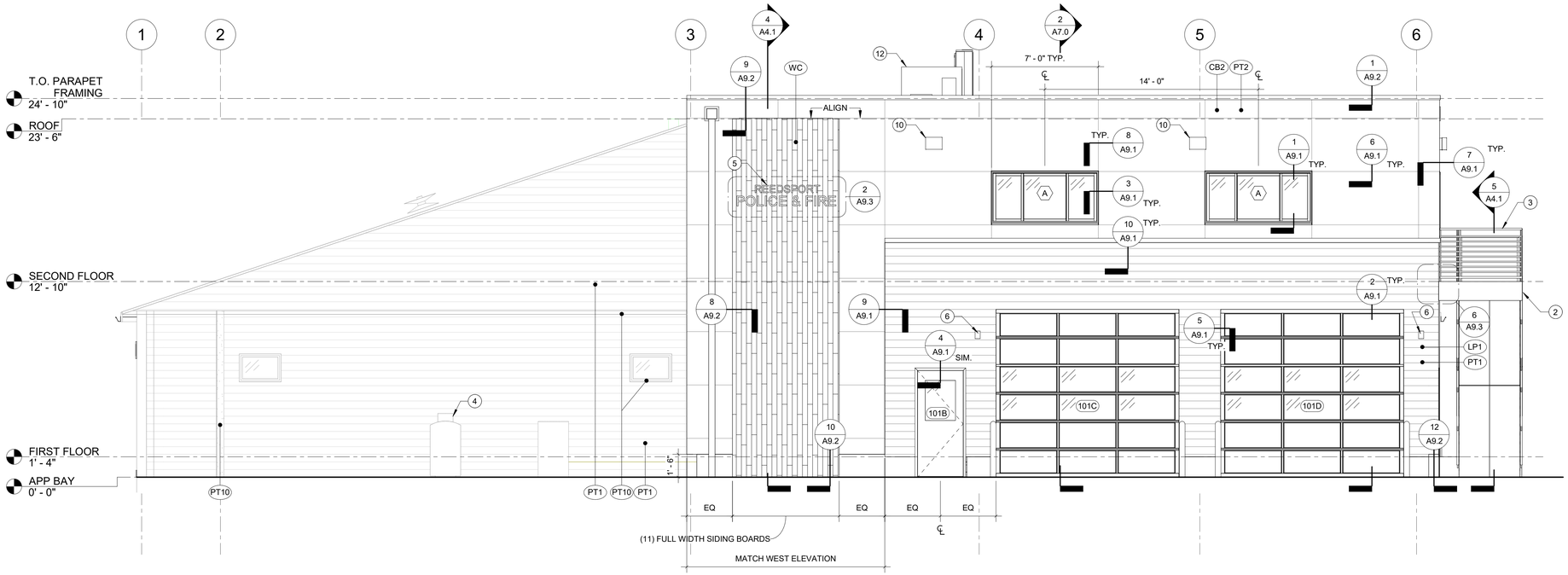

1 A6.1 SOUTH ELEVATION
1/4" = 1'-0"

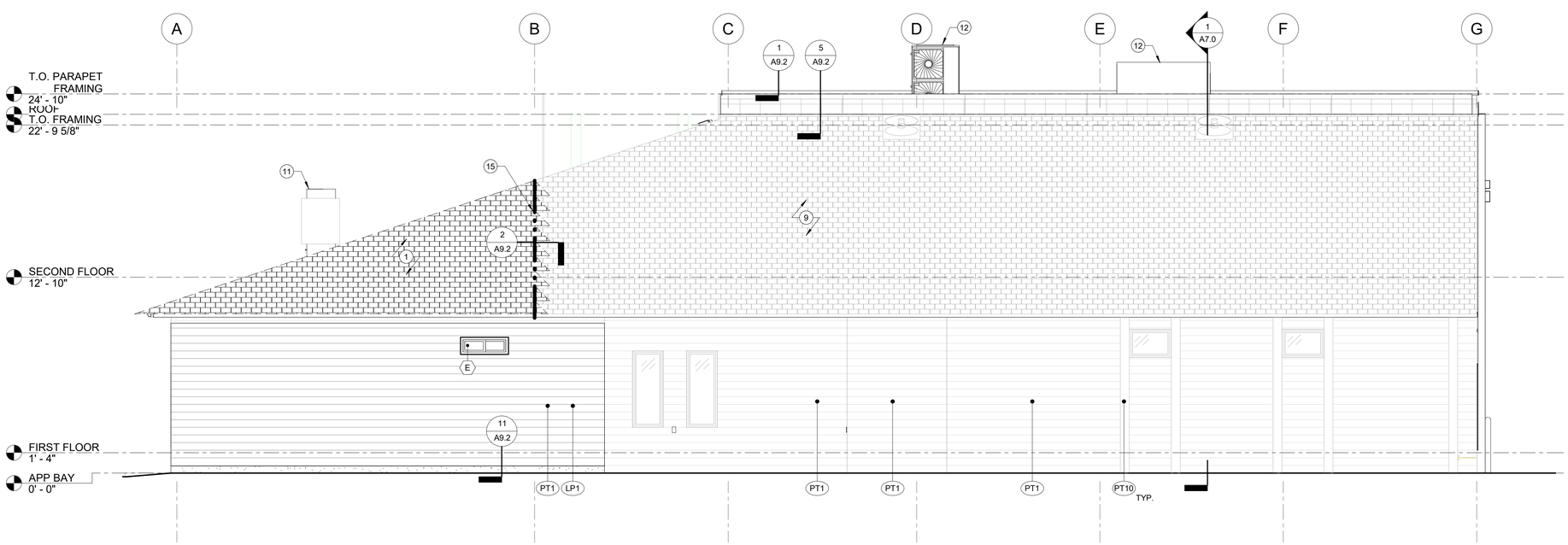

2 A6.1 WEST ELEVATION
1/4" = 1'-0"

ONE INCH EQUALS FULL SCALE 4/25/2023 2:13:23 PM

ELEVATION LEGEND

- (N) LAP SIDING **LP** OR TONGUE AND GROOVE **TG**
- (N) CEMENT BOARD SIDING **CB2**
- (N) WOOD COMPOSITE **WC**
- X — FINISH TAG *SEE FINISH SCHEDULE

ELEVATION KEYNOTES

1. (N) ROOFING
2. (N) GALVANIZED AND PAINTED STEEL STAIRS, SEE STRUCT
3. (N) GALVANIZED AND PAINTED HANDRAIL
4. (E) PROPANE TANK, BRACE PER STRUCT.
5. (N) SIGNAGE
6. (N) WALL MOUNTED FLASHING BEACON, SEE ELECT. NOT INCLUDED IN SEISMIC RETROFIT SCOPE
7. (N) ROOF VENT
8. (N) GUARDRAIL
9. (E) ROOFING TO REMAIN
10. (N) LIGHTING, SEE ELEC.
11. (E) MECH. UNIT
12. (N) MECH. UNIT, SEE MECH.
13. (N) DOWNSPOUT, PAINT TO MATCH WALL
14. (N) RAMP
15. (N) SEISMIC JOINT. SEE ROOF PLAN FOR MORE INFORMATION; SEE STRUCT.

FINISH ABBREVIATIONS

ETR	EXISTING TO REMAIN
CB2	CEMENT BOARD PANEL RAINSCREEN
WC	WOOD COMPOSITE RAINSCREEN
LP1	LAP SIDING
RB-1	RUBBER BASE
RB-2	RUBBER STAIR TREAD
PT#	PAINT PER FINISH SCHEDULE
LVT-1	LUXARY VINYL TILE * INDICATES PATCHING FLOOR FINISH IN SELECT AREAS WHERE DEMOLITION HAS OCCURED, SEE DEMO FLOOR PLAN FOR EXTENT
CPT	CARPET TILE

ZCS ENGINEERING ARCHITECTURE
127 NW D Street, Grants Pass, Oregon 97526 | 541-479-3865

REEDSPORT FIRE DISTRICT
124 N 4TH ST.
REEDSPORT, OR 97467

REEDSPORT FIRE STATION 7

REGISTERED ARCHITECT Jacob Zander OREGON CITY, OR 12412 STATE OF OREGON

△	DATE:	Description

PROJECT NO.	G-1468-21
DRAWN:	MJC,PWR,TBS
CHECKED:	JEZ
DATE:	01-24-23

EXTERIOR ELEVATIONS

A6.1

95% CONSTRUCTION DOCUMENTS | BID / PERMIT SET

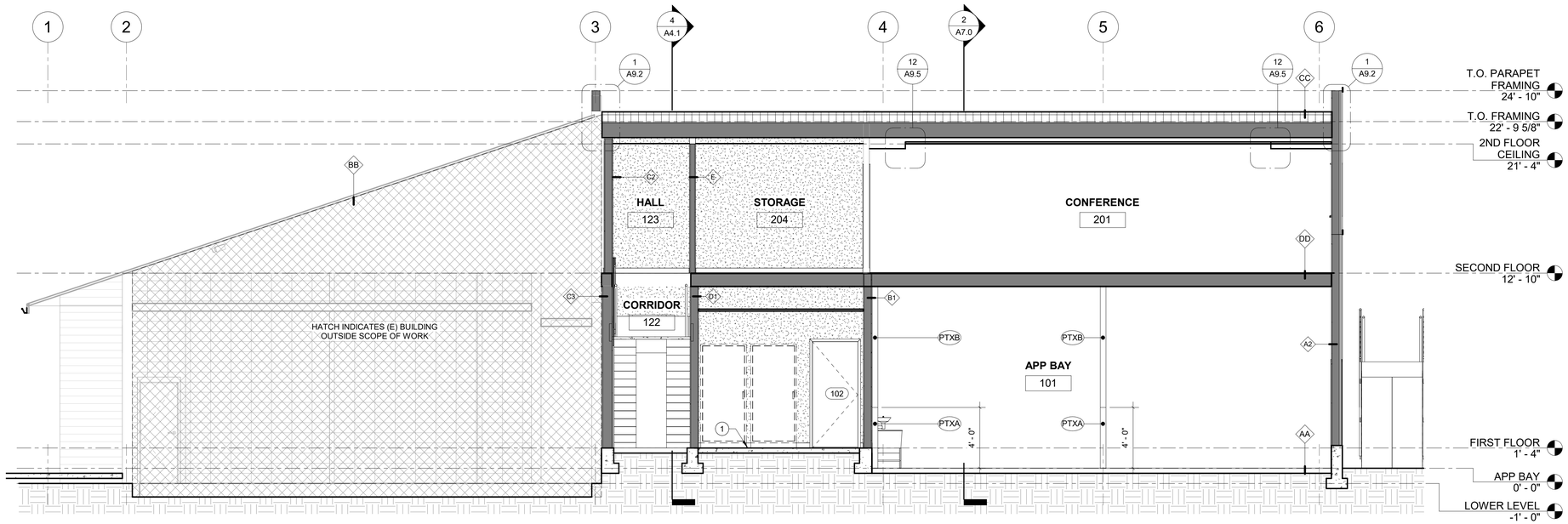

1 A7.0 SECTION - NS
1/4" = 1'-0"

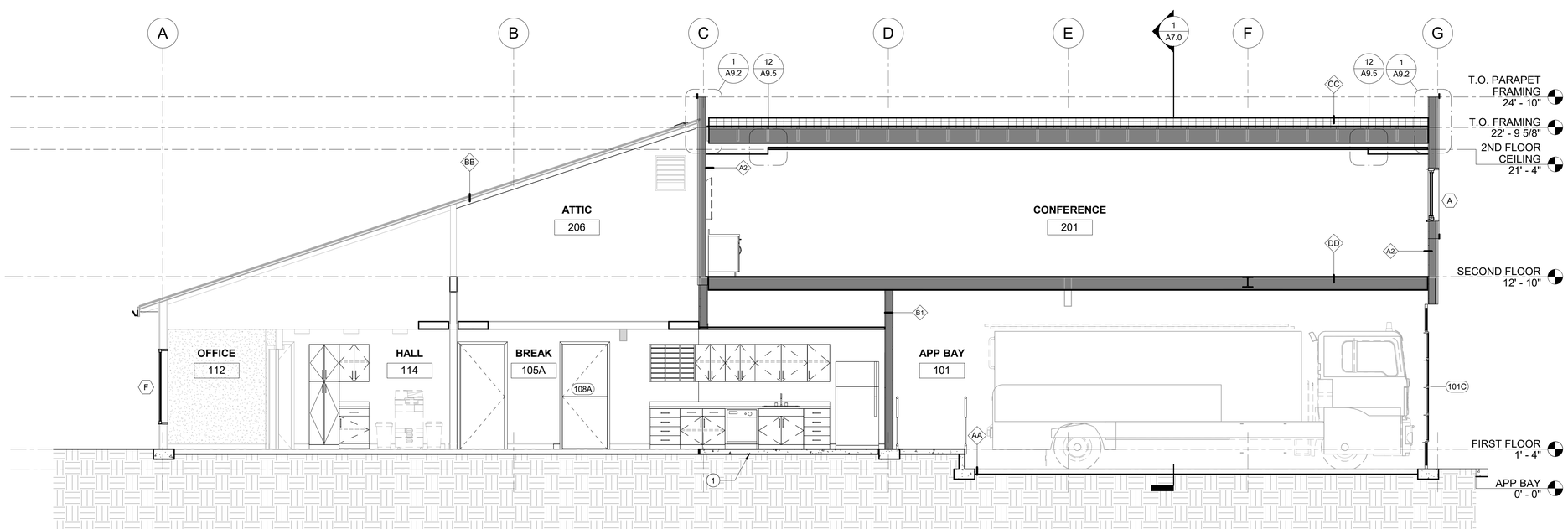

2 A7.0 SECTION - EW
1/4" = 1'-0"

ONE INCH EQUALS FULL SCALE

4/25/2023 2:13:25 PM

SECTION KEYNOTES

1. (N) SLAB-ON-GRADE

ZCS
ENGINEERING
ARCHITECTURE

127 NW D Street, Grants Pass,
Oregon 97526 | 541-479-3865

REEDSPORT FIRE DISTRICT
124 N 4TH ST.
REEDSPORT, OR 97467

REEDSPORT FIRE STATION 7

REEDSPORT FIRE DEPT. VOLUNTEER

REGISTERED ARCHITECT
Jacob Zander
OREGON CITY, OR
12412
STATE OF OREGON

△	DATE:	Description

PROJECT NO.	G-1468-21
DRAWN:	MJC,PWR,TBS
CHECKED:	JEZ
DATE:	01-24-23

BUILDING SECTIONS

A7.0

95% CONSTRUCTION DOCUMENTS | BID / PERMIT SET

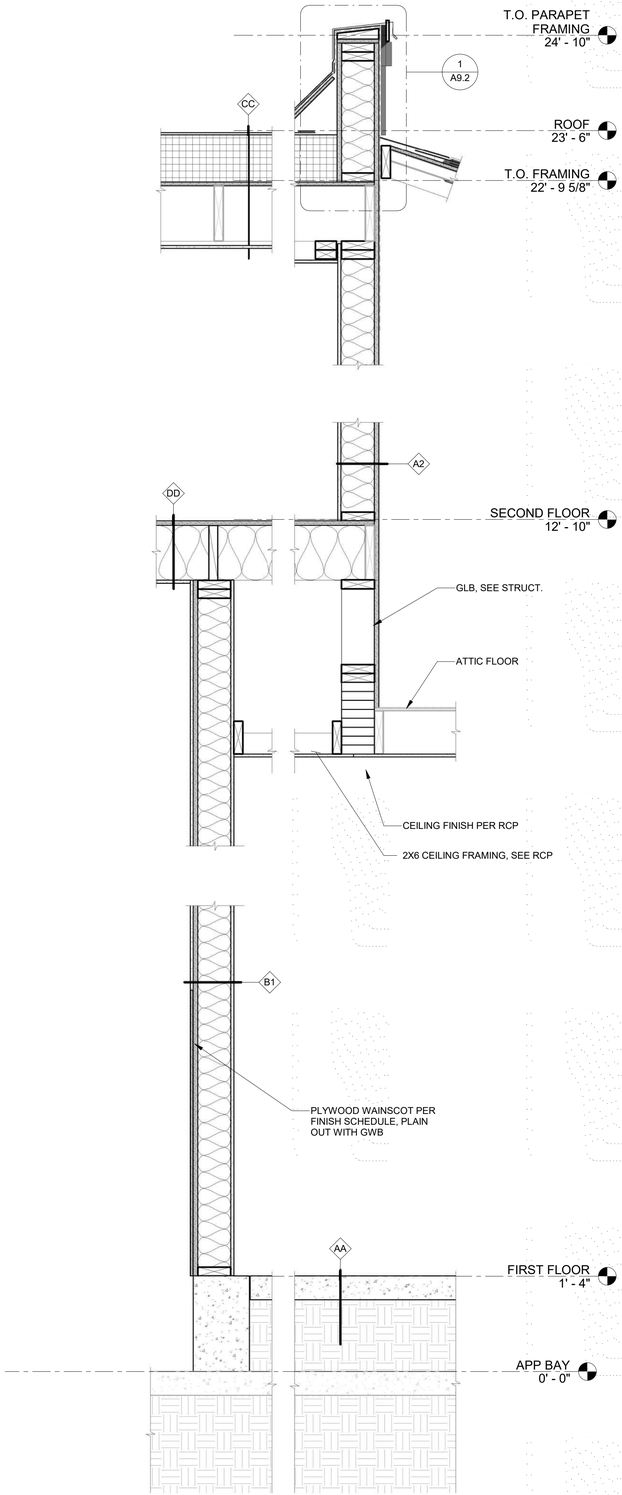

3 A8.0 APP BAY TO FIRST FLOOR SECTION
1" = 1'-0"

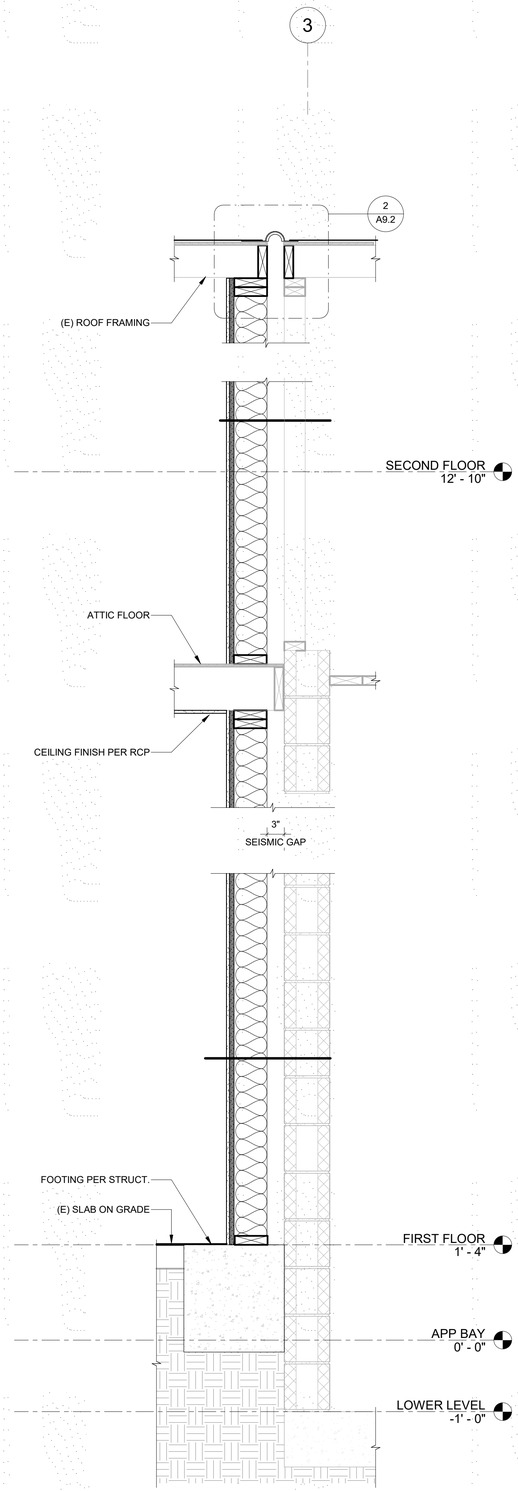

2 A8.0 SEISMIC GAP AT JAIL SECTION
1" = 1'-0"

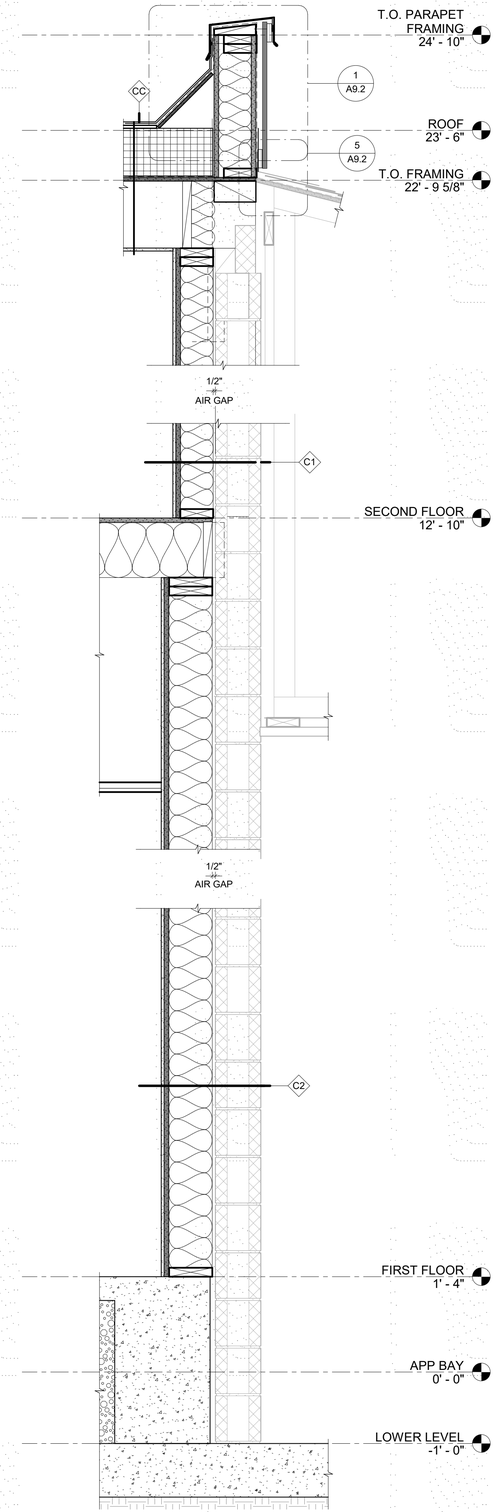

1 A8.0 FIRST FLOOR TO JAIL SECTION
1" = 1'-0"

ONE INCH EQUALS FULL SCALE

4/25/2023 2:13:26 PM

ZCS
ENGINEERING
ARCHITECTURE
127 NW D Street, Grants Pass,
Oregon 97526 | 541-479-3865

REEDSPORT FIRE DISTRICT
124 N 4TH ST.
REEDSPORT, OR 97467

REEDSPORT FIRE STATION 7

REGISTERED ARCHITECT
Jacob Zander
OREGON CITY, OR
12412
STATE OF OREGON

△	DATE:	Description

PROJECT NO.	G-1468-21
DRAWN:	MJC,PWR,TBS
CHECKED:	JEZ
DATE:	01-24-23

WALL SECTIONS

A8.0

95% CONSTRUCTION DOCUMENTS | BID / PERMIT SET

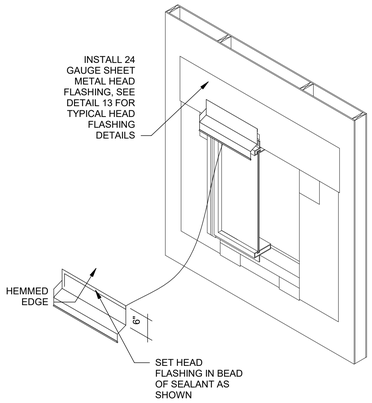

J A7.1 STEP J
HEAD FLASHING

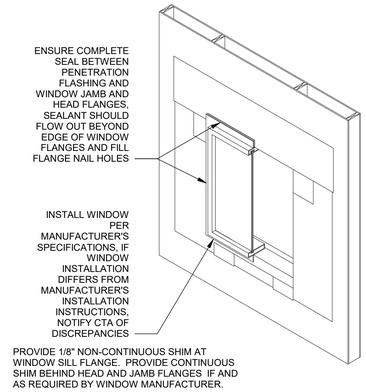

G A7.1 STEP G
INSTALL WINDOW

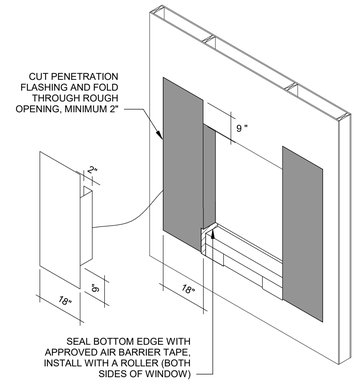

D A7.1 STEP D
JAMB PENETRATION FLASHING

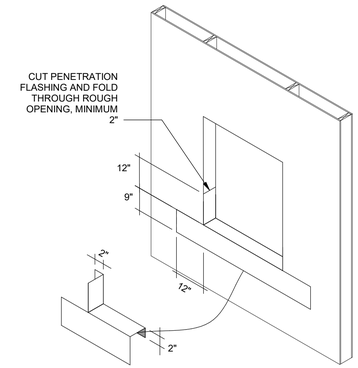

A A7.1 STEP A
INSTALL PENETRATION FLASHING AT SILL

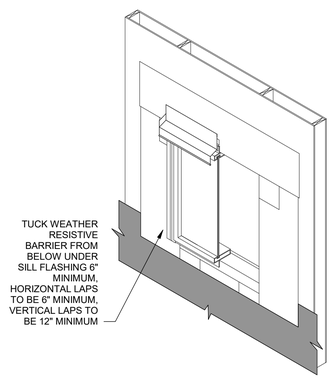

K A7.1 STEP K
WEATHER RESISTIVE BARRIER

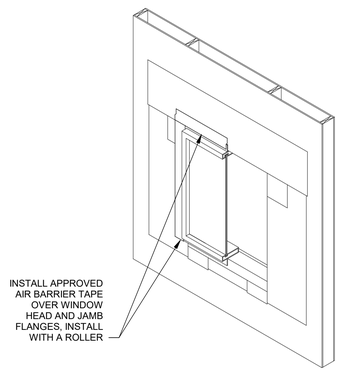

H A7.1 STEP H
TAPE WINDOW FLANGES

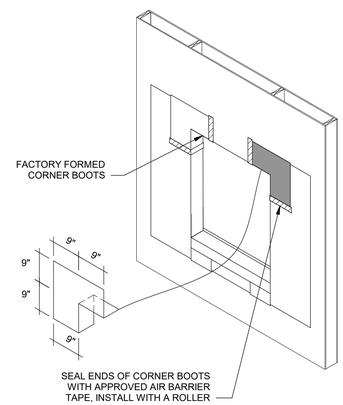

E A7.1 STEP E
HEAD CORNER BOOTS

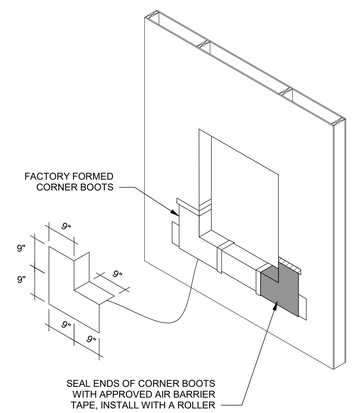

B A7.1 STEP B
SILL CORNER BOOTS

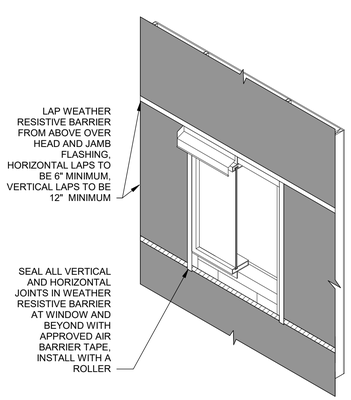

L A7.1 STEP L
WEATHER RESISTIVE BARRIER

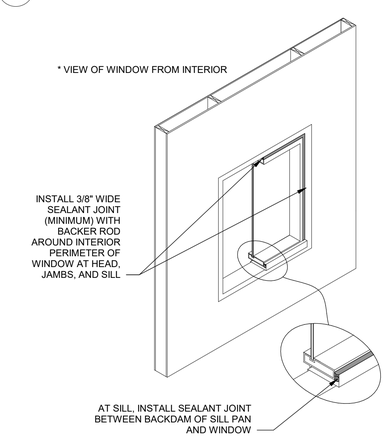

I A7.1 STEP I
INTERIOR SEALANT JOINT

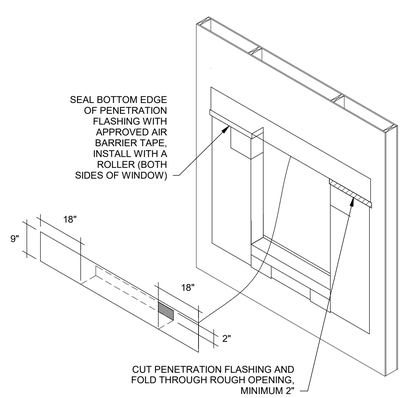

F A7.1 STEP F
HEAD PENETRATION FLASHING

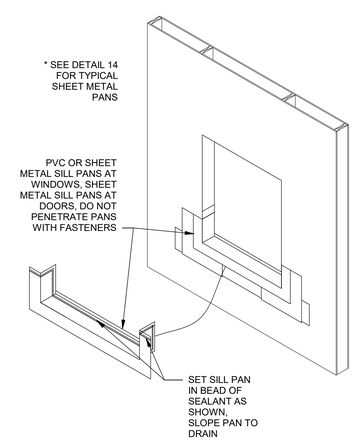

C A7.1 STEP C
SILL PAN

INSTALL OPENINGS PER INSTRUCTIONS ON THIS SHEET AND PER MANUFACTURERS RECOMMENDATIONS.

WALL PENETRATION WRAP NOTES:

- WRAP FLANGED WINDOWS OPENINGS PER STEPS A THROUGH L.
- SEE ARCHITECTURAL DRAWINGS FOR HEAD FLASHING CONFIGURATIONS AND ADDITIONAL DETAILS.
- DO NOT PENETRATE SILL PANS WITH FASTENERS.

DOORS

- WRAP FLANGED DOOR OPENINGS SIMILAR TO STEPS A THROUGH L.
- STEPS A,B AND K ARE NOT REQUIRED IF THERE IS NO WEATHER RESISTIVE BARRIER FROM BELOW.
- SEE ARCHITECTURAL DRAWINGS FOR HEAD FLASHING CONFIGURATIONS AND ADDITIONAL DETAILS.
- DO NOT PENETRATE SILL PAN WITH FASTENERS.

ZCS ENGINEERING ARCHITECTURE
127 NW D Street, Grants Pass, Oregon 97526 | 541-479-3865

REEDSPORT FIRE DISTRICT
124 N 4TH ST.
REEDSPORT, OR 97467

REEDSPORT FIRE STATION 7

REGISTERED ARCHITECT Jacob Zander OREGON CITY, OR 12412 STATE OF OREGON

△	DATE:	Description

PROJECT NO.	G-1468-21
DRAWN:	MJC,PWR,TBS
CHECKED:	JEZ
DATE:	01-24-23

PENETRATION FLASHING DETAILS

A9.0

95% CONSTRUCTION DOCUMENTS | BID / PERMIT SET

ONE INCH EQUALS FULL SCALE 4/25/2023 2:13:27 PM

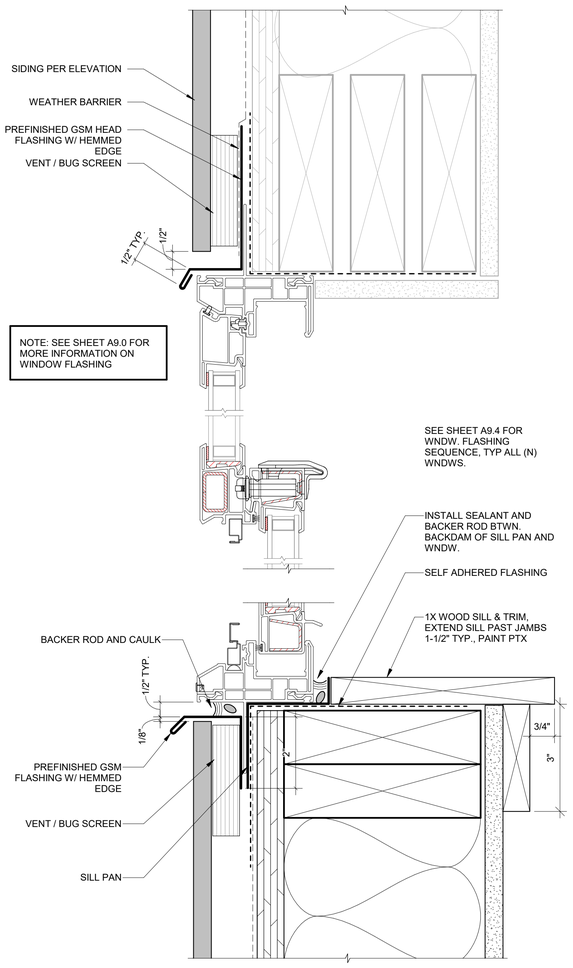

1 A9.1 WINDOW HEAD/SILL
6" = 1'-0"

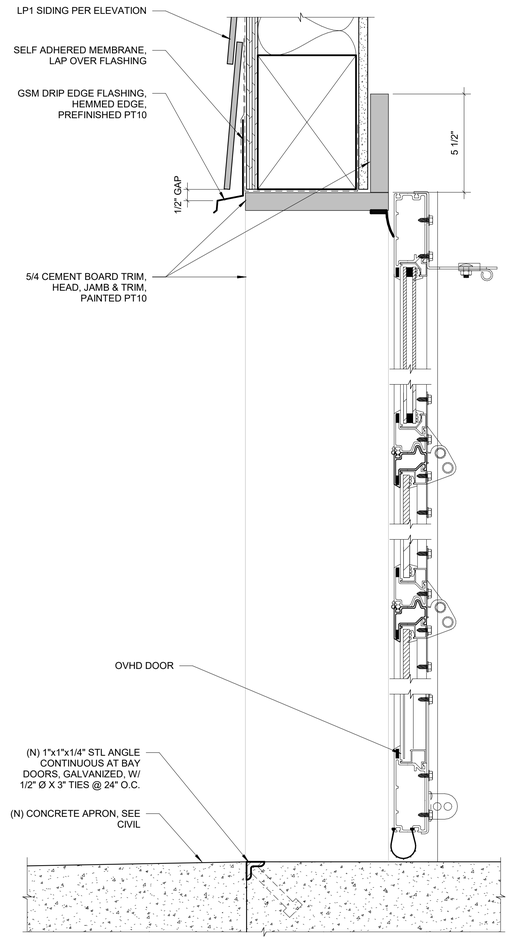

2 A9.1 OVHD DOOR HEAD & SILL
3" = 1'-0"

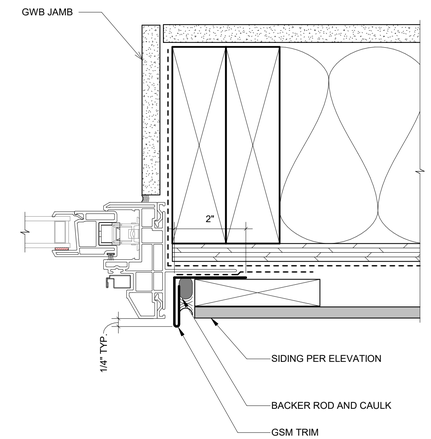

3 A9.1 SIDING AT WINDOW JAMB
6" = 1'-0"

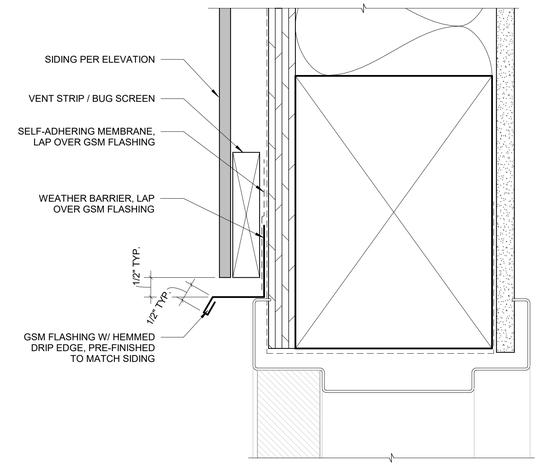

4 A9.1 DOOR HEAD
6" = 1'-0"

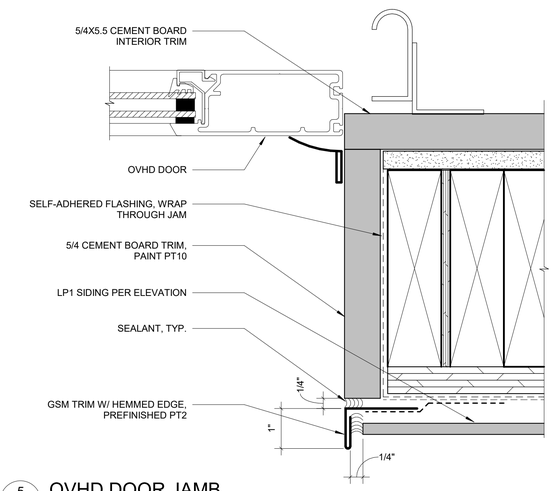

5 A9.1 OVHD DOOR JAMB
6" = 1'-0"

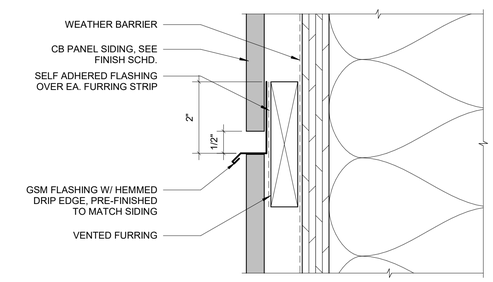

6 A9.1 HORIZONTAL REVEAL, CB2 SIDING
6" = 1'-0"

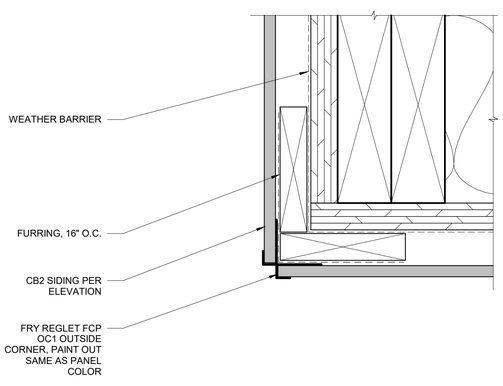

7 A9.1 CB2 OUTSIDE CORNER
6" = 1'-0"

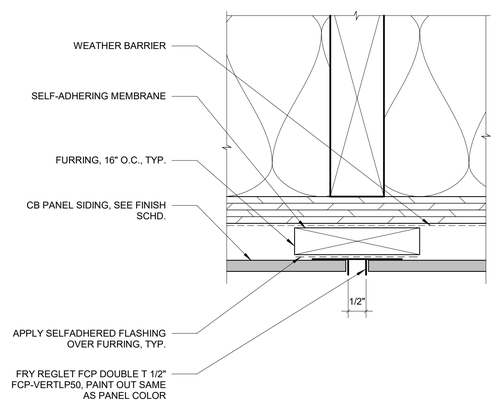

8 A9.1 CB2 VERTICAL REVEAL
6" = 1'-0"

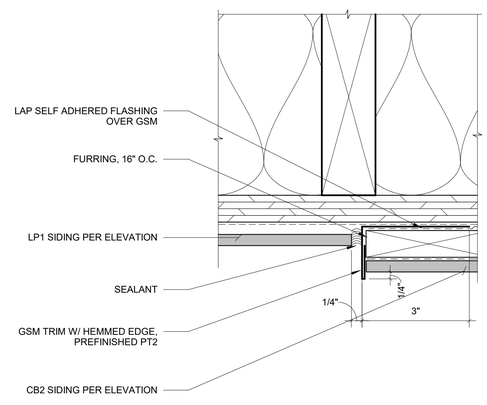

9 A9.1 VERTICAL SIDING TRANSITION
6" = 1'-0"

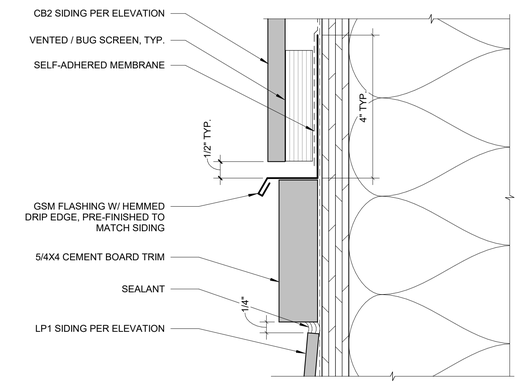

10 A9.1 HORIZONTAL SIDING TRANSITION
6" = 1'-0"

ONE INCH EQUALS FULL SCALE 4/25/2023 2:13:28 PM

ZCS ENGINEERING ARCHITECTURE
127 NW D Street, Grants Pass, Oregon 97526 | 541-479-3865

REEDSPORT FIRE DISTRICT
124 N 4TH ST.
REEDSPORT, OR 97467

REEDSPORT FIRE STATION 7

REGISTERED ARCHITECT Jacob Zander OREGON CITY, OR 12412 STATE OF OREGON

△	DATE:	Description

PROJECT NO.	G-1468-21
DRAWN:	MJC,PWR,TBS
CHECKED:	JEZ
DATE:	01-24-23

EXTERIOR DETAILS

A9.1

95% CONSTRUCTION DOCUMENTS | BID / PERMIT SET

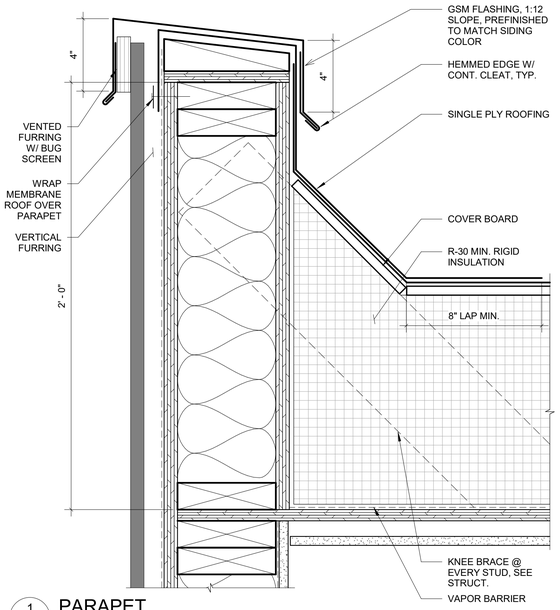

1 A9.2 PARAPET
3" = 1'-0"

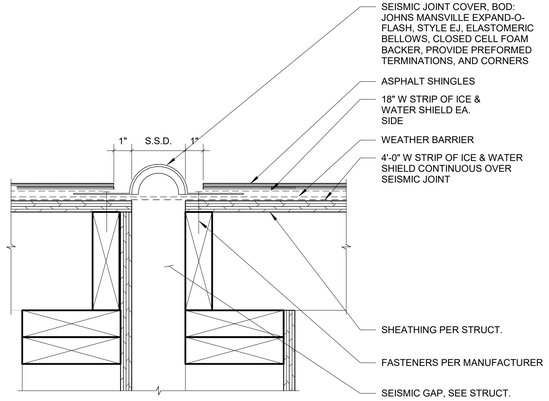

2 A9.2 SEISMIC JOINT PARALLEL TO ROOF SLOPE
3" = 1'-0"

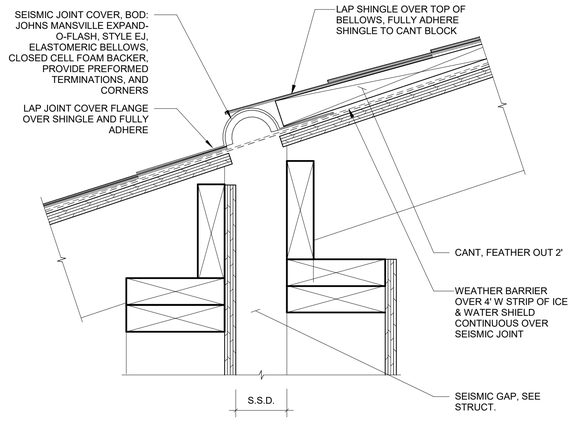

3 A9.2 SEISMIC JOINT PERP. TO ROOF SLOPE
3" = 1'-0"

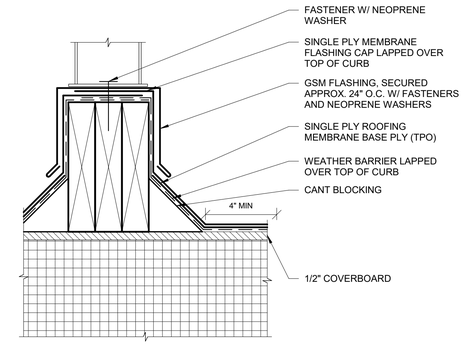

4 A9.2 TPO CURB EQUIPMENT SUPPORT
3" = 1'-0"

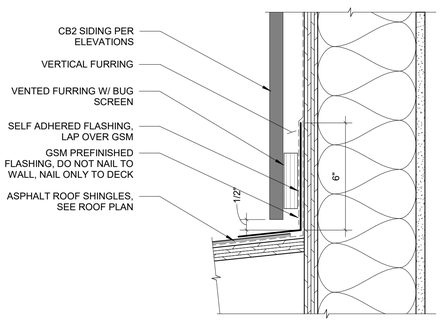

5 A9.2 WALL TO ROOF
3" = 1'-0"

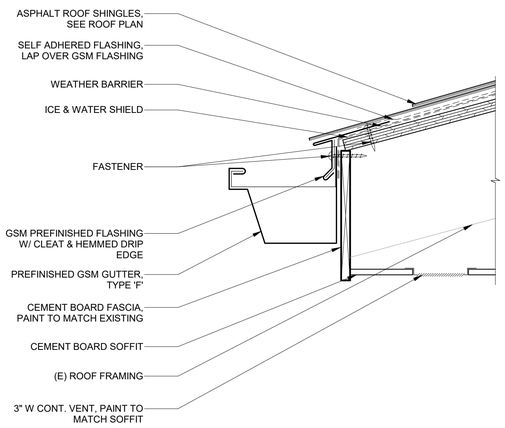

6 A9.2 SOFFIT @ GUTTER
3" = 1'-0"

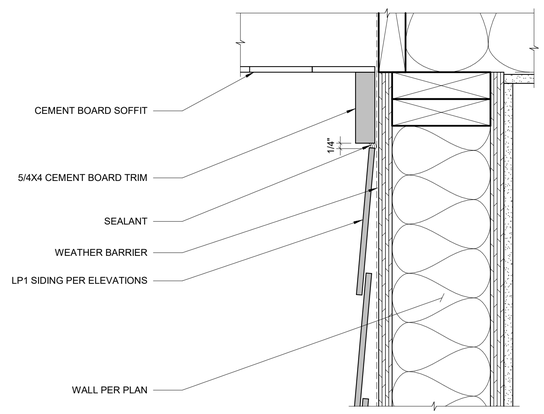

7 A9.2 SOFFIT @ SIDING
3" = 1'-0"

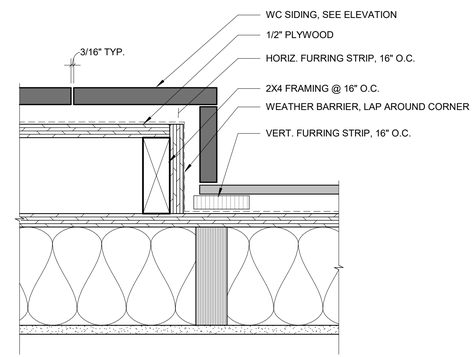

8 A9.2 FEATURE WALL OUTSIDE & INSIDE CORNERS
3" = 1'-0"

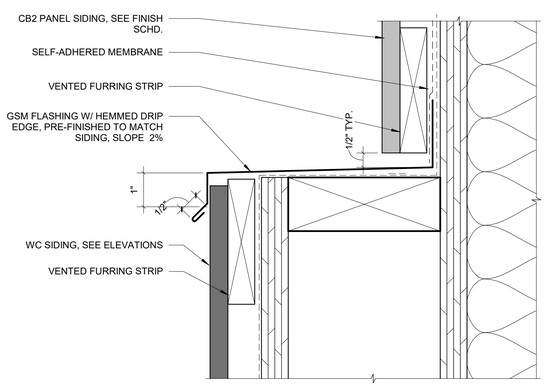

9 A9.2 FEATURE WALL HEAD
6" = 1'-0"

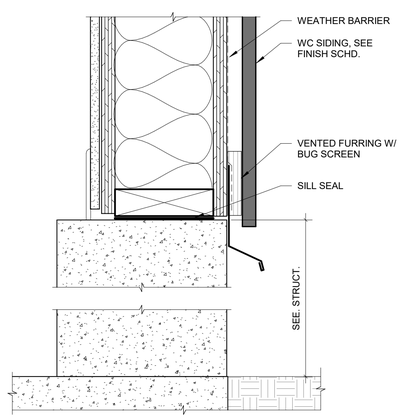

10 A9.2 FEATURE WALL @ GRADE
3" = 1'-0"

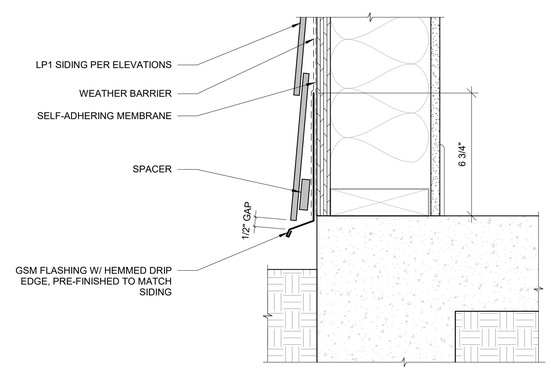

11 A9.2 SIDING AT GRADE
3" = 1'-0"

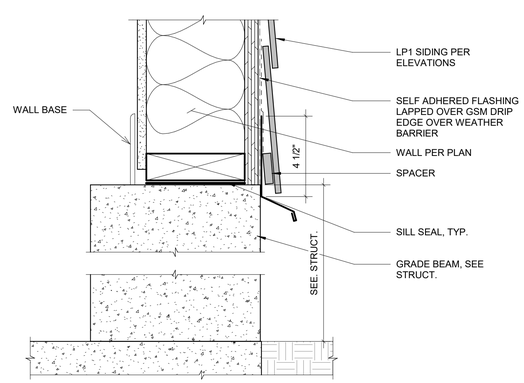

12 A9.2 STEM WALL @ APP BAY
3" = 1'-0"

ONE INCH EQUALS FULL SCALE 4/25/2023 2:13:29 PM

ZCS ENGINEERING ARCHITECTURE
127 NW D Street, Grants Pass, Oregon 97526 | 541-479-3865

REEDSPORT FIRE DISTRICT
124 N 4TH ST.
REEDSPORT, OR 97467

REEDSPORT FIRE STATION 7

REGISTERED ARCHITECT Jacob Zander OREGON CITY, OR 12412 STATE OF OREGON

△	DATE:	Description

PROJECT NO.	G-1468-21
DRAWN:	MJC,PWR,TBS
CHECKED:	JEZ
DATE:	01-24-23

EXTERIOR DETAILS

A9.2

95% CONSTRUCTION DOCUMENTS | BID / PERMIT SET

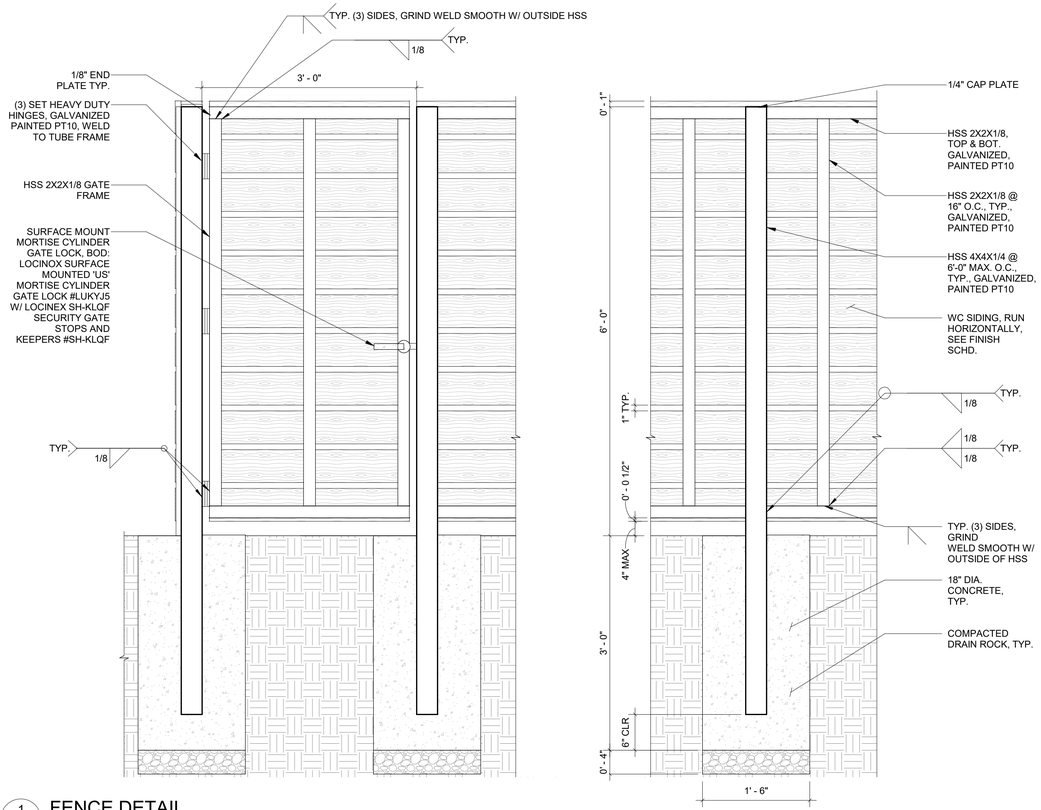

1 A9.3 FENCE DETAIL
1" = 1'-0"

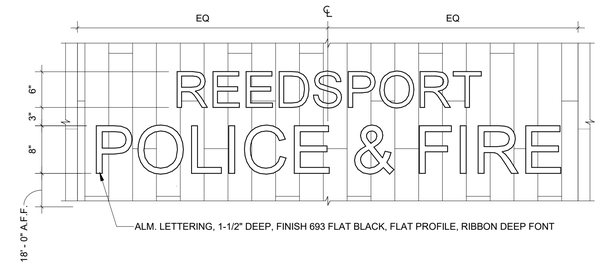

2 A9.3 EXTERIOR SIGNAGE
1" = 1'-0"

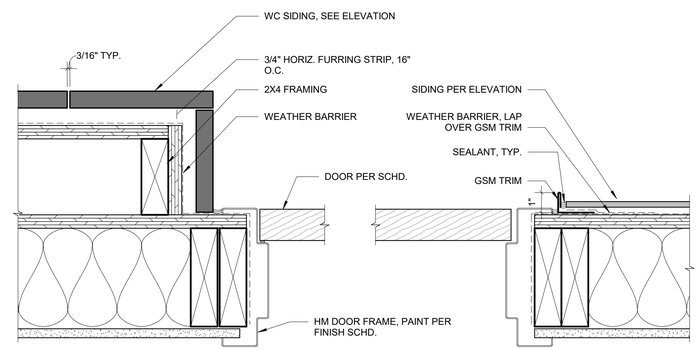

3 A9.3 DOOR JAMB @ FEATURE WALL
3" = 1'-0"

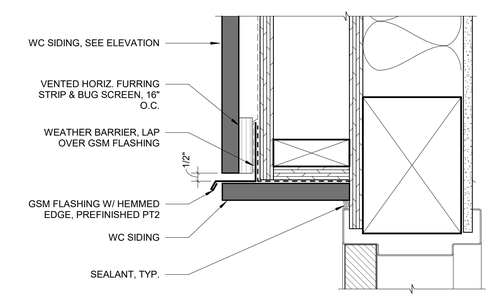

4 A9.3 DOOR HEAD @ FEATURE WALL
3" = 1'-0"

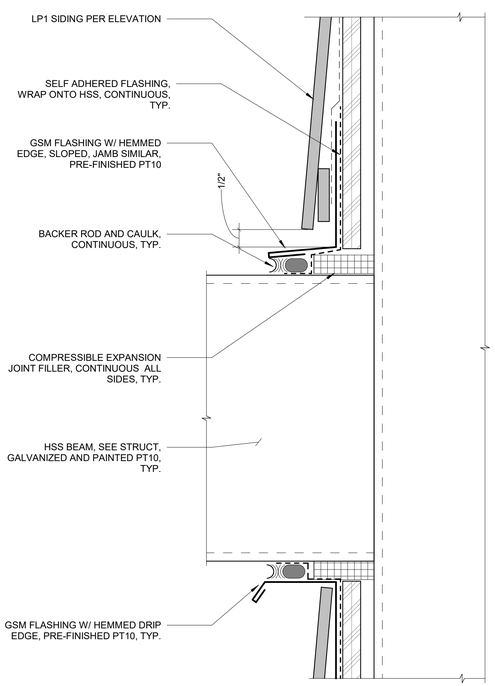

5 A9.3 STRINGER TO WALL CONNECTION
6" = 1'-0"

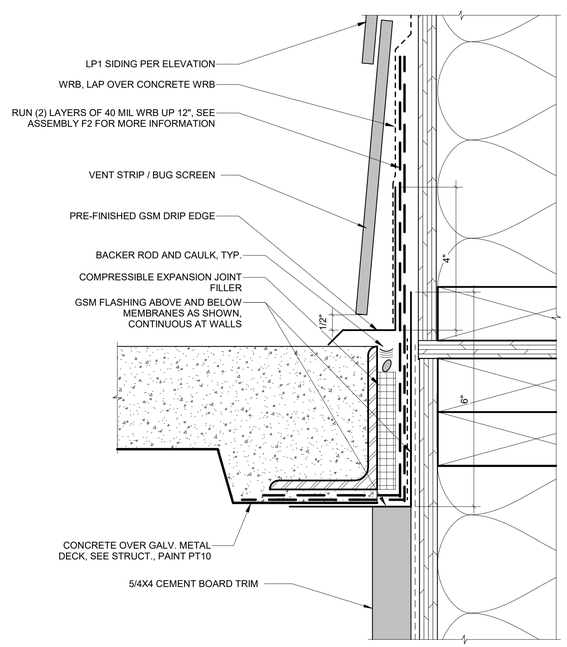

6 A9.3 STAIR LANDING AT SIDEWALL
6" = 1'-0"

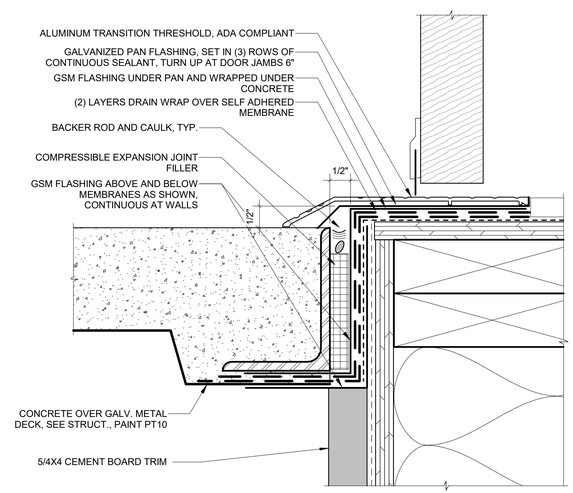

7 A9.3 STAIR LANDING AT DOOR
6" = 1'-0"

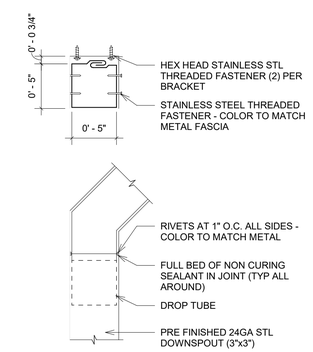

GENERAL GUTTER NOTES:

1. GUTTER JOINTS - JOIN ADJACENT PIECES OF GUTTER USING "BUTT JOINTS" WITH CONCEALED PREFINISHED 24 GA GALV STL SPLICE PLATE SET SPLICE PLATE IN BED OF NON CURING SEALANT AND SECURE WITH RIVETS. COLOR OF RIVETS TO MATCH METAL. CLEAN SEALANT OVER RUN FROM EXPOSED SURFACE OF GUTTER.
2. GUTTER INSIDE/OUTSIDE CORNERS - PREFABRICATE CORNERS W/ 2" LEGS. NEATLY MITER, SEAL LAP AND RIVET CORNER JOINTS COLOR OF RIVETS TO MATCH METAL. CLEAN SEALANT OVER RUN FROM EXPOSED SURFACE OF GUTTER.
3. GUTTER EXPANSION JOINTS - CONSTRUCT USING "BUTT TYPE" JOINT AT LOCATIONS INDICATED. REFER TO SMANCA ARCHITECTURAL SHEET METAL MANUAL FOR APPROVED DESIGN.
4. DOWNSPOUTS - FORM USING CONTINUOUS LOCK SEAM, JOIN USING OVER LAP JOINTS IN THE DIRECTION OF WATER FLOW, SECURE JOINT USING STAINLESS STL THREADED FASTENERS W/ HEAD COLOR MATCHED TO METAL. NEATLY MITER ALL ELLS TO RETURN DOWNSPOUT UNDER SOFFIT FROM ROOF EAVES TO EXTERIOR WALL(S). SLOPE DOWNSPOUT AT 1/2" UNDER SOFFIT.
5. DOWNSPOUT BRACKETS - HEM ALL CUT EDGES WHERE EXPOSED ALONG DOWNSPOUTS. PROVIDE BRACKETS AT 4' O.C. (3 MIN, PER DOWNSPOUT).
6. COLOR TO BE SELECTED BY ARCH.

8 A9.3 TYP. GUTTER & DOWNSPOUT DETAIL
1 1/2" = 1'-0"

ZCS ENGINEERING ARCHITECTURE
127 NW D Street, Grants Pass, Oregon 97526 | 541-479-3865

REEDSPORT FIRE DISTRICT
124 N 4TH ST.
REEDSPORT, OR 97467

REEDSPORT FIRE STATION 7

REGISTERED ARCHITECT Jacob Zander OREGON CITY, OR 12412 STATE OF OREGON

△	DATE:	Description

PROJECT NO.	G-1468-21
DRAWN:	MJC,PWR,TBS
CHECKED:	JEZ
DATE:	01-24-23

EXTERIOR DETAILS

A9.3

95% CONSTRUCTION DOCUMENTS | BID / PERMIT SET

ONE INCH EQUALS FULL SCALE 4/25/2023 2:13:31 PM

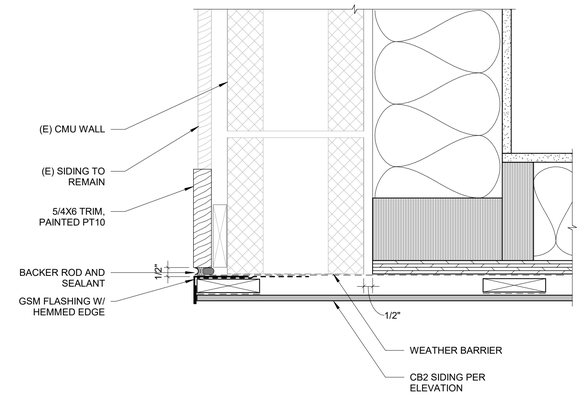

1 A9.4 (N) CB2 SIDING @ (E) CMU CORNER
3" = 1'-0"

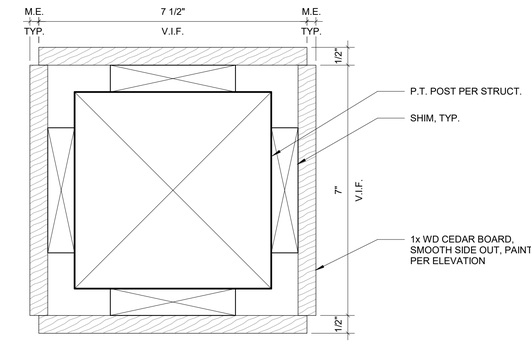

2 A9.4 POST @ NEW EXT. RAMP
6" = 1'-0"

ZCS
ENGINEERING
ARCHITECTURE
127 NW D Street, Grants Pass, Oregon 97526 | 541-479-3865

REEDSPORT FIRE DISTRICT
124 N 4TH ST.
REEDSPORT, OR 97467

REEDSPORT FIRE STATION 7

REEDSPORT FIRE DEPT. VOLUNTEER

REGISTERED ARCHITECT
Jacob Zander
OREGON CITY, OR
12412
STATE OF OREGON

△	DATE:	Description

PROJECT NO.	G-1468-21
DRAWN:	MJC,PWR,TBS
CHECKED:	JEZ
DATE:	01-24-23

EXTERIOR DETAILS

A9.4

95% CONSTRUCTION DOCUMENTS | BID / PERMIT SET

ONE INCH EQUALS FULL SCALE 4/25/2023 2:13:31 PM

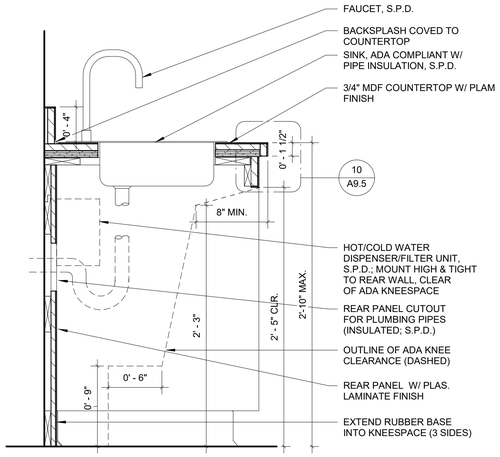

1 A9.5 BASE CABINET DETAIL - W/ SINK
1 1/2" = 1'-0"

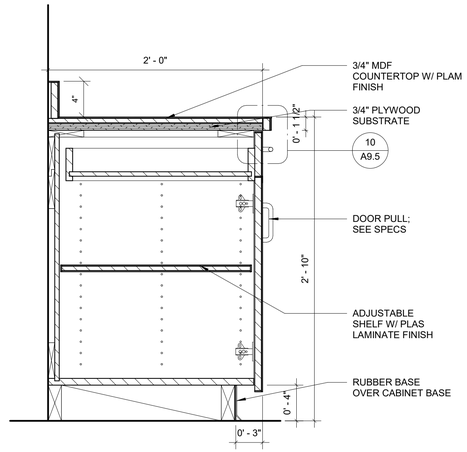

2 A9.5 BASE CABINET DETAIL - W/ DRAWER
1 1/2" = 1'-0"

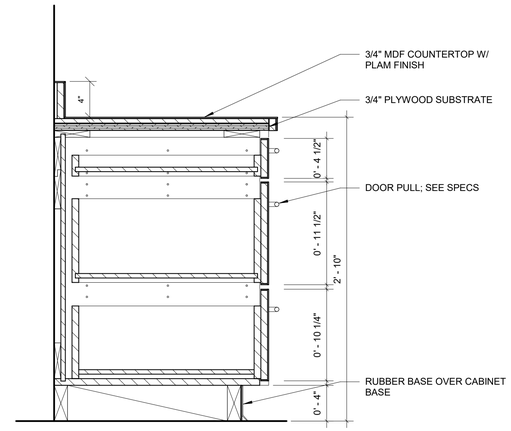

3 A9.5 BASE CABINET DETAIL - 3 DRAWER
1 1/2" = 1'-0"

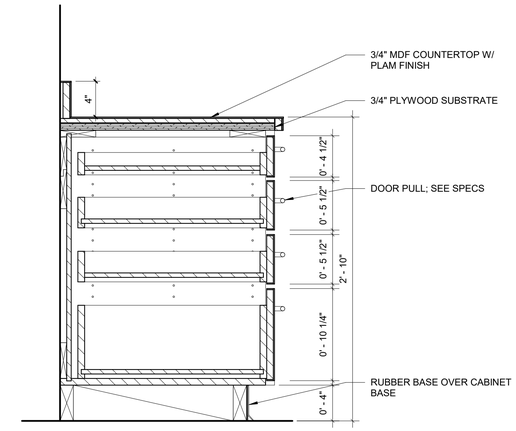

4 A9.5 BASE CABINET DETAIL - 4 DRAWER
1 1/2" = 1'-0"

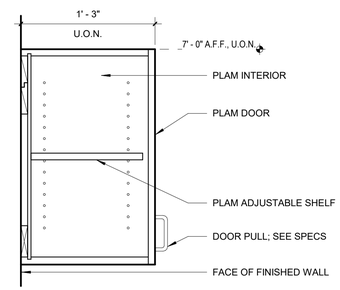

8 A9.5 WALL CABINET DETAIL W/ SHELVES
1 1/2" = 1'-0"

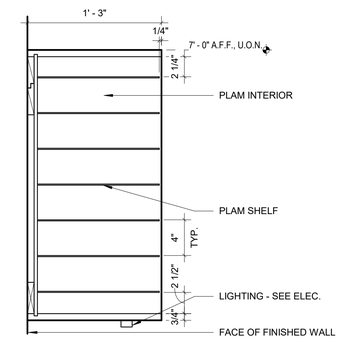

9 A9.5 MAIL SORTER DETAIL
1 1/2" = 1'-0"

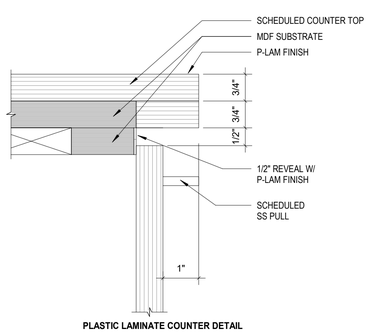

10 A9.5 TYP. EDGE DETAIL @ BASE CABINET
6" = 1'-0"

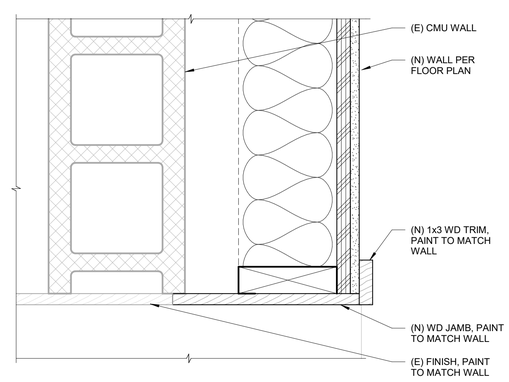

11 A9.5 (N) WALL @ SKYLIGHT
3" = 1'-0"

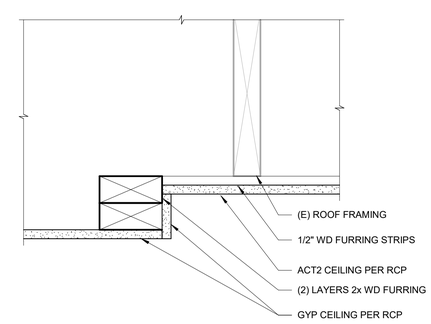

12 A9.5 CEILING TRANSITION @ CONFERENCE ROOM
3" = 1'-0"

ZCS ENGINEERING ARCHITECTURE

127 NW D Street, Grants Pass, Oregon 97526 | 541-479-3865

REEDSPORT FIRE DISTRICT
124 N 4TH ST.
REEDSPORT, OR 97467

REEDSPORT FIRE STATION 7

REEDSPORT FIRE DEPT. VOLUNTEER

REGISTERED ARCHITECT Jacob Zander OREGON CITY, OR 12412 STATE OF OREGON

△	DATE:	Description
2	Date 2	REV 2

PROJECT NO.	G-1468-21
DRAWN:	MJC,PWR,TBS
CHECKED:	JEZ
DATE:	01-24-23

INTERIOR DETAILS

A9.5

95% CONSTRUCTION DOCUMENTS | BID / PERMIT SET

ONE INCH EQUALS FULL SCALE 4/25/2023 2:13:31 PM

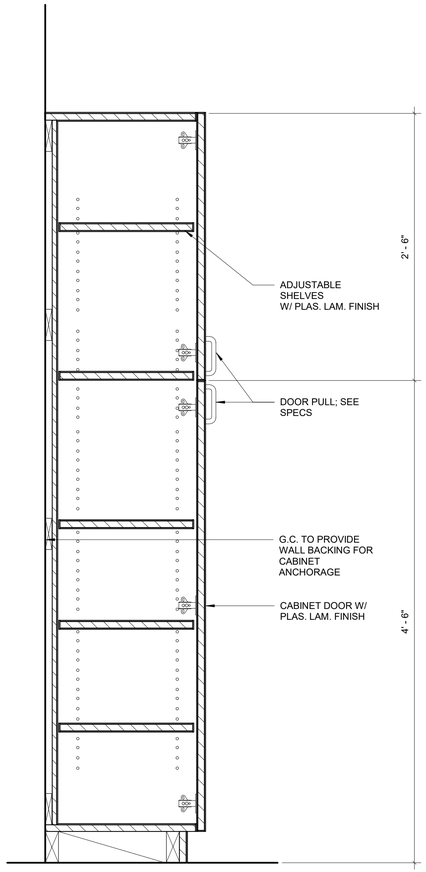

1 A9.6 TALL CABINET SECTION W/ FLUSH SHELVES
1 1/2" = 1'-0"

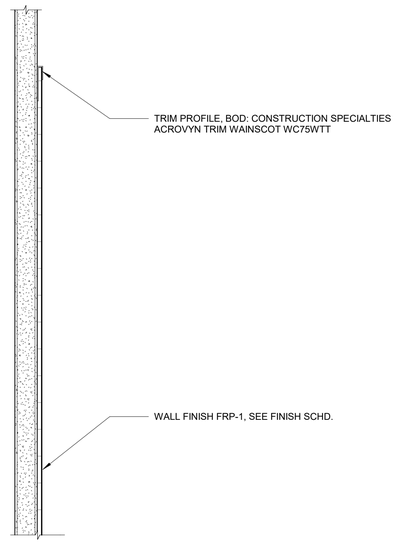

2 A9.6 FRP-1 DETAIL
6" = 1'-0"

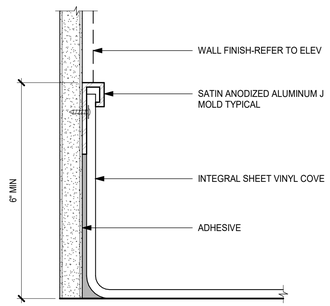

3 A9.6 RES SELF-COVE BASE @ RESTROOMS
6" = 1'-0"

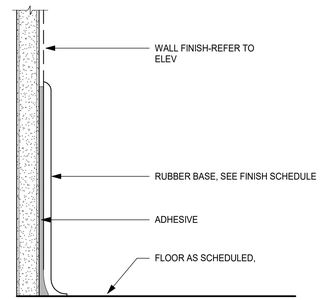

4 A9.6 RESILIENT BASE
6" = 1'-0"

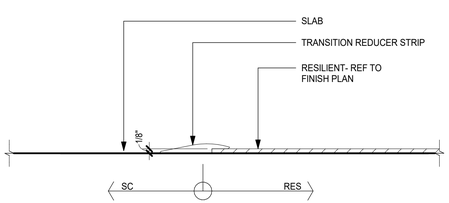

SEALED CONCRETE TO RESILIENT FLOORING

6 A9.6 FLOORING TRANSITION
6" = 1'-0"

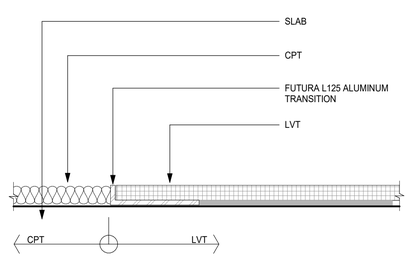

CARPET TO LUXURY VINYL

7 A9.6 FLOORING TRANSITION
6" = 1'-0"

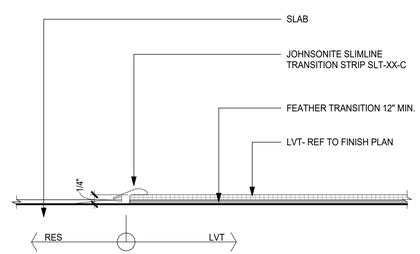

RESILIENT TO LUXURY VINYL

8 A9.6 FLOOR TRANSITION
6" = 1'-0"

ONE INCH EQUALS FULL SCALE

4/25/2023 2:13:31 PM

ZCS
ENGINEERING
ARCHITECTURE
127 NW D Street, Grants Pass,
Oregon 97526 | 541-479-3865

REEDSPORT FIRE DISTRICT
124 N 4TH ST.
REEDSPORT, OR 97467

REEDSPORT FIRE STATION 7

REGISTERED ARCHITECT
Jacob Zander
OREGON CITY, OR
12412
STATE OF OREGON

△	DATE:	Description
2	Date 2	REV 2

PROJECT NO.	G-1468-21
DRAWN:	MJC,PWR,TBS
CHECKED:	JEZ
DATE:	01-24-23

INTERIOR DETAILS

A9.6

95% CONSTRUCTION DOCUMENTS | BID / PERMIT SET

01 33 00 SHOP DRAWINGS, PRODUCT DATA, AND SAMPLES

1.1 SUMMARY
- A. Shop drawing, product data, and sample requirements for all work specified
- B. Submittals for project closeout
- C. Related Section: Submittals in Division 1 which provides detailed information on submittal requirements and format.

1.2 REQUIREMENTS
- A. Shop Drawings: Provide shop drawings in a clear and thorough manner. Identify details by reference to drawing and detail schedule, or room numbers shown.
- B. products or models. Show performance characteristics and capacities, show dimensions and clearances required. Show wiring or piping diagrams and controls.
- C. Samples: Samples shall be of sufficient size and quality to clearly illustrate the following: Functional characteristics of the products with integrally related parts and attachment devices and the full range of color, texture, and pattern.

1.3 SUBMITTALS REQUIRED:
- A. SHOP DRAWINGS: Provide shop drawings for the following specified items:
  1. Roofing Assemblies: base flashings, membrane terminations, insulation layout and slopes, fastening patterns and spacing for insulation and roofing, details for curbs, pipe penetrations, and gutters.
  2. Doors and Windows: plans, elevations, sections, details, and attachments to other work. Include details of provisions for system expansion and contraction and for drainage of moisture in the system to the exterior. Provide hardware schedule and indicate operating hardware types, functions, quantity, and locations.
  3. Exterior Cladding Assemblies: Installation layout showing details of edge conditions, joints, panel profiles, corners, anchorage, attachment system, trim, flashings, closures and accessories and special details. Distinguish between factory, shop, and field assembled work.
  4. Roof Specialties: plans, elevations, expansion joint locations, keyed details, and attachments to other work.
  5. Metal Fabrications: plans, elevations, and sections of handrails, guardrails, stairs and bollards. Distinguish between factory, shop, and field assembled work.
  6. Casework: plans, elevations, sections, details. Provide hardware schedule and indicate operating hardware types, functions, quantity, and locations.
  7. Interior Signage: elevations and detials
  8. Exterior Signage: elevation and details, mounting requirements
- B. PRODUCT DATA: Provide product data for the following specified items:
  1. Thermal Insulation, Gypsum Assemblies, Weather Barriers, Acoustical Ceiling Panels: product data
  2. Sheet Metal Flashing: Maintenance data, warranty
  3. Joint Sealants: Product data, compatibility and adhesion test reports (from manufacturer), warranties
  4. Roof Assemblies: Product data, qualification data for manufacturer and installer, manufacturer certificate certifying roof complies with performance criteria, product test reports, maintenance data, warranties
  5. Exterior Cladding Assemblies: Product data, qualification data for manufacturer and installer, product test reports, maintenance data, warranties
  6. Doors and Windows, Glazing: Product data, product testing reports, hardware schedule (as applicable), maintenance data, warranty
  7. Resilient Base, Resilient flooring, Tile Carpeting: Product data, maintenance data, warranties
  8. Painting: Product data, paint schedule indicating substrate, color, sheen, paint type, and primer
  9. Corner Guards: Product data, maintenance data, warranties
  10. Interior Signage: Product data, maintenance data, warranties
  11. Fire Extinguisher Cabinets: Product data, maintenance data, warranties
  12. Wall Tile: Product data, maintenance data, warranties
- A. SAMPLES: Provide physical samples for the following specified items:
  1. Roof Assembly, exterior cladding assemblies: Provide standard color chart for selection if not indicated on drawings.
  2. Finish flooring, wall base: Provide sample of type and color indicated on drawings.
  3. Painting: Provide color samples of each color and sheen used on project.
  4. Rear Vented Facade System: Provide sample of type and color indicated on drawings.
  5. Wall Tile & Countertops:Provide sample of type and color indicated on drawings.

02 41 19 SELECTIVE DEMOLITION

1.1 SUMMARY
- A. Demolition and removal of selected portions of building
- B. Salvage of existing items to be reused or recycled

1.2 DEFINITIONS
- A. Remove: Detach items from existing construction and legally dispose of them off-site.
- B. Remove and Salvage: Carefully detach from existing construction, In a manner to prevent damage and deliver to owner.
- C. Remove and Reinstall: Detach items from existing construction, prepare for reuse, and reinstall where indicated.
- D. Existing to Remain: Existing items of construction that are not to be permanently removed.

2.1 SELECTIVE DEMOLITION, GENERAL
- A. Verify that utilities have been disconnected and capped before starting selective demolition operations.
- B. Maintain fire-protection facilities in service during selective demolition operations.
- C. Existing services to be removed, relocated, or abandoned: locate identify, disconnect, and seal or cap off indicated utility services and mechanical/electrical systems serving areas to be selectively demolished.
- D. Provide temporary barricades and other protection required to prevent injury to people and damage to adjacent buildings and facilities to remain.
- E. Neatly cut openings and holes plumb, square and true to dimensions required. Use cutting methods least likely to damage construction to remain or adjoining construction.
- F. Do not use cutting torches until work area is cleared of flammable materials. Maintain portable fire-suppression devices during flame-cutting operations.
- G. Locate selective demolition equipment and remove debris and materials so as not to impose excessive loads on supporting walls, floors, or framing.
- H. Removed and Salvaged Items: Store items in a secure area until delivery to Owner and transport items to Owner's storage area.
- I. Existing Items to Remain: Protect construction indicated to remain against damage and soiling during selective demolition. When permitted by EOR, items may be removed to a suitable, protected storage location during selective demolition and cleaned and reinstalled in their original locations after selective demolition operations are complete.
- J. Do not allow demolished materials to accumulate on-site. Transport demolished materials off Owner's Property and legally dispose of them.

05 50 00 METAL FABRICATIONS

PART 1 - GENERAL

1.01 SUMMARY
- A. Provide metal fabrications for the following:
  - a. Guardrails
  - b. Handrails
  - c. Bollards
  - d. Misc steel fabrication for structural supports

1.02 SUBMITTALS
- A. Product Data: Submit manufacturer's product data and installation instructions for each material and product used.
- B. Shop Drawings: Submit shop drawings indicating material characteristics, details of construction, connections, and relationship with adjacent construction.
- C. Provide welding certificates, AWS D1.1/D1.2M, "Structural Welding Code - Steel"

1.03 QUALITY ASSURANCE
- A. Coordinate installation of metal fabrications that are anchored to or that receive other work. Furnish setting drawings, templates, and directions for installing anchorages, including sleeves, concrete inserts, anchor bolts, and items with integral anchors, that are to be embedded in concrete or masonry. Deliver such items to project site in time for installation.
- B. Field Measurements: Verify actual locations of walls, floor slabs, decks, and other construction contiguous with metal fabrications by field measurements before fabrication.
- C. Thermal Movements: Allow for thermal movements from ambient and surface temperature changes acting on exterior metal fabrications by preventing buckling, opening of joints, overstressing of components, failure of connections, and other detrimental effects.

PART 2 - PRODUCTS

2.01 MATERIALS
- A. Metals, General: Provide materials with smooth, flat surfaces unless otherwise indicated. For metal fabrications exposed to view int eh completed Work, provide materials without seam marks, roller marks, rolled trade names, or blemishes.
  - a. Steel Plates, Shapes, and Bars: ASTM A36/A36M.
  - b. Stainless Steel Sheet, Strip and Plates: ASTM A276/A276M Type 304
  - c. Rolled-Steel Floor Plate: ASTM A786/A786M, rolled from plate complying with ASTM A36/A36M or ASTM A283/A283M, Grade C or D.
  - d. Steel Tubing: ASTM A500/A500M, cold-formed steel tubing.
  - e. Steel Pipe: ASTM A53/A53M Standard Weight (schedule 40) unless otherwise indicated.
- B. Fasteners, General: Unless otherwise indicated, provide Type 304 stainless steel fasteners for exterior use and zinc-plated fasteners with coating complying with ASTM B633 or ASTM F1941/F1941M, Class Fe/Zn 5, at exterior walls. Select fasteners for type, grade, and class required.
  - a. Steel Bolts and Nuts: ASTM A307, Grade A; with hex nuts ASTM A563.
  - b. High-Strength Bolts, Nuts, and Washers: ASTM F3125/F3125M Grade A325 Type 3, heavy-hex steel structural bolts; ASTM A563 Grade DH3 heavy hex carbon-steel nuts
  - c. Anchor Bolts: ASTM F1554, Grade 36 of dimensions indicated; with nuts ASTM A563.
    1. Hot-dip galvanize or provide mechanically deposited, zinc coating where item being fastened is indicated to be galvanized.
  - d. Anchors, General: Capable of sustaining, without failure, a load equal to six times the load imposed when installed in unit masonry and four times the load imposed when installed in concrete, as determined by testing in accordance with ASTM E488, conducted by a qualified independent testing agency.
  - e. Cast-in-Place Anchors in Concrete: Either threaded or wedge-type unless otherwise indicated; galvanized ferrous castings, either ASTM A47 malleable iron or ASTM A27 cast steel. Provide bolts, washers, and shims as needed, all hot-dip galvanized per ASTM F2329.
  - f. Post-Installed Anchors: Torque controlled expansion anchors or chemical anchors:
    1. Material for interior locations: Carbon-steel components zinc plated to comply with ASTM B633 or ASTM F194, Class Fe/Zn 5, unless otherwise indicated.
    2. Material for exterior locations and where stainless steel is indicated: Alloy Group 1 (A1) stainless steel bolds, ASTM F595 and nuts ASTM F594.
- C. Miscellaneous Materials
  - a. Universal Shop Primer: Fast-curing, lead- and chromate-free, universal modified-alkyd primer and compatible with top coat. Use primer containing pigments that make it easily distinguishable form zinc-rich primer.
  - b. Shrinkage-Resistant Grout: Factory-packaged, nonmetallic, nonstaining, noncorrosive, nongaseous grout complying with ASTM C1107.

PART 3 - EXECUTION

3.01 FABRICATION
- A. Cut, drill, and punch metals cleanly and accurately. Remove burrs and east edges to a radius of approximately 1/32 inch unless otherwise indicated. Remove sharp or rough areas on exposed surfaces.
- B. Form bent-metal corners to smallest radius possible without causing grain separation or otherwise impairing work.
- C. Weld corners and seams continuously to comply with the following: obtain fusion without undercut or overlap, remove welding flux immediately, at exposed connections, finish exposed welds and surfaces smooth and blended so no roughness shows after finishing.

3.02 INSTALLATION
- A. Cutting, fitting, and placement: Perform cutting, drilling, and fitting required for installing metal fabrications. Set metal fabrications accurately in location, alignment, and elevation; with edges and surfaces level, plumb, true, and free of rack; and measured from established lines and levels.
- B. Fit exposed connections accurately together to form hairline joints. Weld connections that are not to be left as exposed joints but cannot be shop welded because of shipping size limitations. DO not weld, cut, or abrade surfaces of exterior units that have been hot-dip galvanized after fabrication and are for bolted or screwed field connections.
- C. Provide temporary bracing or anchors in formwork for items that are to be built into concrete, masonry, or similar construction.
- D. Immediately after erection, clean field welds, bolted connections, and abraded areas. Paint uncoated and abraded areas with same material as used for shop painting to comply with SSPC-PA 1 for touching shop-painted surfaces.

06 41 16 PLASTIC-LAMINATE-CLAD ARCHITECTURAL CABINETS

1.1 SUMMARY
- A. Plastic-laminate-faced architectural cabinets
- B. Wood furring, blocking, shims, and hanging strips for installing plastic-laminate-faced architectural cabinets that are not concealed within other construction.

2.1 PLASTIC-LAMINATE-FACED ARCHITECTURAL CABINETS
- A. Quality standard: unless otherwise indicated, comply with the "Architectural Woodwork Standards" for grades of cabinets indicated for construction, finishes, installation, and other requirements.
- B. Grade: Custom
- C. Type of Construction: See elevations and details
- D. Door and Drawer- Flush, see elevations
- E. High-Pressure Decorative Laminate: NEMA LD 3, grades as indicated or if not indicated, as required by quality standard. Manufacturers provide products by Formica Corporation or Wilsonart.
- F. Laminate Cladding for Exposed Surfaces:
  - F.A. Horizontal surfaces: Grade HGS or Porcelin countertop, see elevations
  - F.B. Postformed surfaces: Grade HGP
  - F.C. Vertical Surfaces: Gade VGS
  - F.D. Edges: PVC edge banding, .12 inch (3 mm) thick, matching laminate in color, pattern, and finish
  - F.E. Pattern Direction Vertically for drawer fronts, doors, and fixed panels
- G. Concealed backs of panels with exposed plastic-laminate surfaces: High-pressure decorative laminate, NEMA LD 3, Grade BKL
- H. Drawer Construction: Fabricate with exposed fronts fastened to subfront with mounting screws from interior of body.
  - H.A. join subfronts, backs, and sides with glued dovetail joints
- I. Colors, patterns, and finishes: provide materials and products that result in colors and textures of exposed laminate surfaces complying with the schedule.

2.2 WOOD MATERIALS
- A. Maximum moisture content of lumber: 15 percent for 2" nominal (38-mm actual thickness or less; 19 percent for more than 2-inch nominal (38-mm actual) thickness unless otherwise indicated.

2.2 WOOD-PRESERVATIVE-TREATED LUMBER
- A. Wood products: Provide materials that comply with requirements of referenced quality standard for each type of architectural cabinet and quality grade specified unless otherwise indicated. Wood moisture content is 5 to 10 percent.
- B. Composite wood and agrifiber products: provide materials that comply with requirements of referenced quality standard for each type of architectural cabinet and quality grade specified unless otherwise indicated.
  - B.A. Medium-density fiberboard: ANSI A208.2, Grade 130
  - B.B. Particleboard: ANSI A208.1, Grade M-2
  - B.C. Straw-based particleboard: ANSI A208.1, Grade M-2, except for density
  - B.D. Softwood plywood: DOC PS 1
  - B.E. Thermoset decorative panels: Particleboard or MDF finished with thermally fused, melamine-impregnated decorative paper and complying with requirements of NEMA LD 3, Grade VGL, for Test Methods 3.3, 3.4, 3.6, 3.8, and 3.10

2.3 FIRE RETARDANT-TREATED MATERIALS
- A. Fire-retardant-treated materials, general: where fire-retardant-treated materials are indicated, use materials that are acceptable to authorities having jurisdiction as determined by testing performed identical products by a qualified testing agency.

on

2.4 CABINET HARDWARE AND ACCESSORIES
- A. General: provide cabinet hardware and accessory materials associated with architectural cabinets except for items specified in Section 087100 "Door Hardware."
- B. Butt hinges: 2-3/4 inch (70 mm), five-knuckle steel hinges made from .095-inch-(2.4-mm-) thick metal, and as follows:
  - B.A. Semiconcealed hinges for flush doors: BHMA A156.9, B01361
  - B.B. Semiconcealed hinges for overlay doors: BHMA A156.9, B01521
- C. Frameless concealed hinges (European type): BHMA A156.9, B01602, 100 degrees of opening
- D. Back-mounted pulls: BHMA A156.9, B02011
- E. Wire pulls: back mounted, solid metal, 4 inches (100 mm) long, 5/16 inch (8 mm) in diameter
- F. Catches: magnetic catches, BHMA A156.9, B03141
- G. Adjustable shelf standards and supports: BHMA A156.9, B04071; with shelf rests, B04081
- H. Shelf rests: BHMA A156.9, B04013; metal
- I. Drawer slides: BHMA A146.9
  - I.A. Grade 1 and grade 2: Side mounted
  - I.B. Grade 1HD-100 and grade 1HD-200: Side mounted; full-extension type; zinc-plated steel ball-bearing slides
  - I.C. For drawers not more than 3 inches (75 mm) high and not more than 24 inches (600 mm) wide, provide Grade 2.
  - I.D. For drawers more than 3 inches (75 mm) high, but not more than 6 inches (150 mm) high not more than 24 inches (600 mm) wide, provide Grade 1HD-100. I.E. For drawers more than 6 inches (150 mm) high or more than 24 inches (600 mm) wide, provide Grade 1HD-200
  - I.F. For computer keyboard shelves, provide Grade 1HD-100.
  - I.G. For trash bins not more than 20 inches (00 mm) high and16 inches (400 mm) wide, provide Grade 1HD-200.
- J. Door locks: BHMA A156.11, E07121
- K. Drawer locks: BHMA A156.11, E07041
- L. Door and drawer silencers: BHMA A156.16, L03011
- M. Grommets for cable passage: 3-1/8" (79 mm), molded-plastic grommets and matching plastic caps with slot for wire passage.
- N. Exposed hardware finishes: For exposed hardware, provide finish that complies with BHMA A156.18 for BHMA finish number indicated
- O. For concealed hardware, provide manufacturer's standard finish that complies with product class requirements in BHMA A156.9.

2.5 MISCELLANEOUS MATERIALS
- A. Furring, blocking, shims, and hanging strips: softwood or hardwood lumber, kiln-dried to less than 15 percent moisture content
- B. Anchors: Select material, type, size, and finish required for each substrate for secure anchorage. Provide metal expansion sleeves or expansion bolts for post-installed anchors. Use nonferrous-metal or hot-dip galvanized anchors and inserts at inside face of exterior walls and at floors.
- C. Adhesive for bonding plastic laminate is contact cement. Adhesive for bonding edges is hot melt adhesive or adhesive specified above for faces.

2.6 FABRICATION
- A. Complete fabrication, including assembly and hardware application, to maximum extent possible before shipment to Project site. Dissemble components only as necessary for shipment and installation. Where necessary for fitting at site, provide ample allowance for scribing, trimming, and fitting.
- B. Shop-cut openings to maximum extent possible to receive hardware, appliances, electrical work, and similar items. Locate openings accurately and use templates or roughing-in diagrams to produce accurately sized and shaped openings. Sand edges of cutouts to remove splinters and burrs.
- C. Install glass to comply with applicable requirements in Section 088000 "Glazing" and in GANA's "Glazing Manual".
  - C.A. For glass in frames, secure glass with removable stops.
  - C.B. For exposed glass edges, polish and grind smooth

06 41 16 PLASTIC-LAMINATE-CLAD ARCHITECTURAL CABINETS, CONT.

3.1 INSTALLATION
- A. Before installation, condition cabinets to humidity conditions in installation areas for not less than 72 hours.
- B. Grade: install cabinets to comply with quality standard grade of item to be installed.
- C. Anchor cabinets to anchors or blocking built in or directly attached to substrates. Secure with wafer-head cabinet installation screws.
- D. Install cabinets level, plumb, and true in line to a tolerance of 1/8 inch in 96 inches (3 mm in 2400 mm) using concealed shims.
  - D.A. scribe and cut cabinets to fit adjoining work, refinish cut surfaces and repair damaged finish at cuts.
  - D.B. Install cabinets without distortion so doors and drawers fit openings and are accurately aligned. Adjust hardware to center doors and drawers in openings and to provide unencumbered operation. Complete installation of hardware and accessory items as indicated.
  - D.C. Fasten wall cabinets through back, near top and bottom, and at ends not more than 16 inches (400 mm) o.c. with No. 10 wafer-head screws sized for not less than 1-1/2-inch (38 mm) penetration into wood framing, blocking, or hanging strips.

07 01 50.19 PREPARATION FOR REROOFING

1.1 SUMMARY
- A. Section Includes:
  1. Full tear-off of roofing down to sheathing of roof areas indicated on Drawings.
  2. Removal of flashings and counterflashings.
  3. Removal of gutters and downspouts.

1.2 QUALITY ASSURANCE
- A. Installer Qualifications: Approved by warrantor of existing roofing system to work on existing roofing.

1.3 FIELD CONDITIONS
- A. Existing Roofing System: Standing-seam metal roofing.
- B. Owner will occupy portions of building immediately below reroofing area prior to Date of Substantial Completion.
  1. Conduct reroofing so Owner's operations are not disrupted.
  2. Provide Owner with not less than 72 hours written notice of activities that may affect Owner's operations.
  3. Coordinate work activities daily with Owner. Contractor is responsible with placing protective dust and water-leakage covers over sensitive equipment and furnishings, shutting down HVAC and fire-alarm or -detection equipment if needed, and evacuating occupants from below work area.
  4. Before working over structurally impaired areas of sheathing, notify Owner to evacuate occupants from below affected area.
     - a. Verify that occupants below work area have been evacuated before proceeding with work over impaired sheathing area.
- C. Protect building to be reroofed, adjacent buildings, walkways, site improvements, exterior plantings, and landscaping from damage or soiling from reroofing operations.
- D. Maintain access to existing walkways, corridors, and other adjacent occupied or used facilities.
- E. Conditions existing at time of inspection for bidding will be maintained by Owner as far as practical.
  1. Construction Drawings for existing roofing system are provided for Contractor's convenience and information, but they are not a warranty of existing conditions. They are intended to supplement rather than serve in lieu of Contractor's own investigations. Contractor is responsible for conclusions derived from existing documents.
- F. Weather Limitations: Proceed with reroofing preparation only when existing and forecasted weather conditions permit Work to proceed without water entering existing roofing system or building.
  1. Remove only as much roofing in one day as can be made watertight in the same day.

2.1 AUXILIARY REROOFING MATERIALS
- A. General: Use auxiliary reroofing preparation materials recommended by roofing system manufacturer for intended use and compatible with components of new roofing system.

3.1 PREPARATION
- A. Seal or isolate windows that may be exposed to airborne substances created in removal of existing materials.
- B. Shut off rooftop utilities and service piping before beginning the Work.
- C. Test existing roof drains to verify that they are not blocked or restricted.
  1. Immediately notify Architect of any blockages or restrictions.
- D. Coordinate with Owner to shut down air-intake equipment in the vicinity of the Work.
  1. Cover air-intake louvers before proceeding with reroofing work that could affect indoor air quality or activate smoke detectors in the ductwork.
- E. During removal operations, have sufficient and suitable materials on-site to facilitate rapid installation of temporary protection in the event of unexpected rain.
- F. Maintain roof drains in functioning condition to ensure roof drainage at end of each workday.
  1. Prevent debris from entering or blocking roof drains and conductors.
     - a. Use roof-drain plugs specifically designed for this purpose.
     - b. Remove roof-drain plugs at end of each workday, when no work is taking place, or when rain is forecast.
  2. If roof drains are temporarily blocked or unserviceable due to roofing system removal or partial installation of new roofing system, provide alternative drainage method to remove water and eliminate ponding.
     - a. Do not permit water to enter into or under existing roofing system components that are to remain.

3.2 ROOF TEAR-OFF
- A. Notify Owner each day of extent of roof tear-off proposed for that day.
- B. Lower removed roofing materials to ground and onto lower roof levels, using dust-tight chutes or other acceptable means of removing materials from roof areas.
- C. Full Roof Tear-off, Where indicated on Drawings, remove existing roofing and other roofing system components down to the existing roof sheathing.
  1. Remove existing standing seam metal roofing and weather barrier.
  2. Remove base flashings and counterflashings.
  3. Remove perimeter edge flashing and gravel stops.
  4. Remove copings.
  5. Remove flashings and pipes, curbs, mechanical equipment, and other penetrations if present.
  6. Remove roof drains indicated on Drawings to be removed.

07 01 50.19 PREPARATION FOR REROOFING CONT.

3.3 DECK PREPARATION
- A. Inspect deck after tear-off of roofing system.
- B. If broken or loose fasteners that secure deck panels to one another or to structure are observed, or if deck appears or feels inadequately attached, immediately notify Architect.
  1. Do not proceed with installation until directed by Architect.
- C. If deck surface is unsuitable for receiving new roofing or if structural integrity of deck is suspect, notify Architect.
  1. Do not proceed with installation until directed by Architect.
- D. Provide additional deck securement as indicated on Drawings.
- E. Replace plywood roof sheathing as indicated on Drawings.

3.4 BASE FLASHING REMOVAL
- A. Remove existing base flashings.
  1. Clean substrates of contaminants, such as asphalt, sheet materials, dirt, and debris.
- B. Remove existing gutters and downspouts.
  1. Clean substrates of contaminants, such as asphalt, sheet materials, dirt, and debris.

07 20 00 THERMAL INSULATION

1.1 SUMMARY
- A. Perimeter wall insulation, below grade
- B. Spray foam insulation
- C. Glass fiber blanket
- D. See Division 07 Sections for insulation specified as part of roofing assembly

1.2 PERFORMANCE CRITERIA
- A. Fire-Test-Response Characteristics: Provide insulation and related materials with the fire-test-response characteristics indicated. Identify materials with appropriate markings of applicable testing and inspecting agency.
  1. Surface-Burning Characteristics: ASTM E 84
  2. Fire-Resistance Ratings: ASTM E 119
  3. Combustion Characteristics: ASTM E 136

2.1 PRODUCTS
- A. Perimeter Wall Insulation: Extruded polystyrene board insulation, ASTM C 578, Type IV, 1 1/2" minimum thickness, R-7.5 minimum.
  1. Cavitymate Ultra; the Dow Chemical Co
  2. FOAMULAR 150, Owens Corning
  3. Or approved equal
- B. Spray Foam Insulation:
  1. Exterior application: Closed-cell polyurethane foam insulation, ASTM C 1029, Type II; Max flame-spread index = 25, Max smoke-developed index = 450. See drawings for thickness and R-value. Foam must be separated from interior space with 1/2-inch gypsum or an approved 15 minute fire barrier.
- C. Glass-Fiber Blanket Insulation: ASTM C 665, Type I, max flame-spread index = 25, max smoke-developed index = 50.
  1. Exterior wall: Faced, 3-1/2-inch-thick R-13, 5-1/2-inch-thick R-21. Place face on warm side of wall assembly.
  2. Roof/ceiling: Unfaced, 12-inch-thick, R-38
  3. Interior wall: Unfaced, 3-1/2-inch thick
  4. Safing: Mineral wool sound attenuation fire batts (SAFB)

3.1 EXECUTION
- A. Install insulation that is undamaged, dry, and unsoiled and that has not been left exposed at any time to ice, rain, or snow.
- B. Extend insulation in thickness indicated to envelop entire area to be insulated. Cut and fit tightly around obstructions and fill voids with insulation. remove projections that interfere.
- C. Water-Piping Coordination: If water piping is located within insulated exterior walls, coordinate location of piping to ensure that it is placed on warm side of insulation and insulation encapsulates piping.
- D. Glass-Fiber Blanket Insulation:
  1. Use insulation widths and lengths that fill he cavities formed by framing members. if more than one length is required to fill cavity, provide lengths that will produce a snug fit between ends.
  2. Place insulation in cavities formed by framing members to produce a friction fit between edges of insulation and adjoining framing members.
  3. Maintain 3-inch clearance of insulation around recessed lighting fixtures.
  4. For metal framed wall cavities where cavity heights exceed 96 inches support unfaced blankets mechanically.
  5. Stuff glass-fiber loose fill insulation into miscellaneous voids and cavity spaces where shown. Compact to approximately 40% of normal maximum volume equaling a density of approximately 2.5 lb/cu. ft.

07 25 00 WEATHER BARRIERS

1.1 SUMMARY
- A. Weather barrier membrane

1.3 PERFORMANCE CRITERIA
- A. Air Penetration: 0.001 cfm/sqft at 75Pa, when tested in accordance with ASTM E2178. Type I per ASTM E1677.
- B. Water Vapor Transmission: 28 perms, when tested in accordance with ASTM E96, Method B.
- C. Water Penetration Resistance: Min. 280 cm when tested in accordance with AATCC Test Method 127.
- D. Basis Weight: Min. 2.7 oz/sq yd, when tested in accordance with TAPPI Test Method T-410
- E. Air Resistance: Air infiltration at >1500 seconds, when tested in accordance with TAPPI Test Method T-460
- F. Tear Resistance: 12/10 lbs., when tested in accordance with ASTM D882, Method A
- G. Tensile Strength: Min. 38/35 lbs/in., when tested in accordance with ASTM D882, Method A
- H. Surface Burning Characteristics: Class A, when tested in accordance with ASTM E84. Flame Spread: 10, Smoke Developed: 10.

2.1 PRODUCTS
- A. Provide separate weather barrier products for cementitious panel siding and for rear ventilated facade system siding.
- B. Cementitious Panel siding weather barrier:
  1. Drainable WRB with 90% drainage efficiency under ASTM E 2273.
  2. Manufacturers: Basis of Design product:
     - a. Dupont Tyvek DrainWrap
     - b. Barricade Building Products Barricade Drainage Wrap
     - c. Kingspan GreenGuard RainDrop 3D Building Wrap
     - d. or approved equal.
- C. Rear Ventilated Facade System siding weather barrier:
  1. A dark-colored, non-perforated, non-woven, non-absorbing, breathable membrane that resists air flow, bulk water and wind driven rain and channels water and moisture to the outside of the building envelope.
  2. Manufacturers: Basis of Design product:
     - a. VaproShield RevealShield IT
     - b. or approved equal.
- D. Fasteners:
  1. Wood Frame Construction: Rust resistant #4 nails with large 1-inch plastic cap fasteners.
- E. Sealants: Provide sealants that comply with ASTM C920 and are compatible with weather barrier, elastomeric acrylic-urethane blended polymer sealant to maintain watertight conditions.
- F. Vent Strips: Provide plastic ventilation strips which are compatible with siding, weather barrier, and elastomeric acrylic-urethane blended polymer sealant to allow for drainage at bottom of wall assembly behind siding, as recommended by the manufacturer and installed per manufacturer recommendations.
  1. Basis of design: James Hardie 18mm PVC Cavity Vent Strip
  2. Or approved equal.
- G. Provide adhesives recommended by weather barrier manufacturer.
- H. Provide membrane flashing and primer for window openings and penetrations recommended by weather barrier manufacturer.

3.1 EXECUTION
- A. Install weather barrier prior to installation of windows and doors. Start weather barrier installation at a building corner, leaving 6-12 inches of weather barrier extended beyond corner overlap.
- B. Install weather barrier in a horizontal manner starting at the lower portion of the wall surface with subsequent layers installed in a shingling manner to overlap lower layers. Maintain weather barrier plumb and level.
- C. Overlap weather barrier:
  1. Exterior corners: minimum 12 inches
  2. Seams: minimum 6 inches
- D. Attach weather barrier to studs through exterior sheathing. Secure using weather barrier manufacturer recommended fasteners, space 12-18 inches vertically on center along stud line and 24 inch on center, maximum horizontally.
- E. Seal seams of weather barrier with seam tape at all vertical and horizontal overlapping seams. Seal any tears or cuts as recommended by weather barrier manufacturer.
- F. Flashing at Openings:
  1. Cut flexible flashing a min. of 12 inches longer than width of sill rough opening.
  2. Cover horizontal sill by aligning flexible flashing edge with inside edge of sill. Adhere to rough opening across sill and up jambs in minimum of 6 inches. Secure flashing tightly into corners by working in and applying pressure along the sill before adhering up the jambs.
  3. Fan flexible flashing at bottom corners onto face of wall. Firmly press in place. Mechanically fasten fanned edges.
  4. Apply 9-inch wide strips of flashing at jambs. Align flashing with interior edge of jamb framing. Start flashing at head of opening and lap sill flashing down to the sill.
  5. Spray-apply primer to top 6 inches of jamb and exposed sheathing.
  6. Install flexible flashing at opening head using installation procedures used at sill. Overlap jamb flashing minimum of 2 inches.
  7. Coordinate flashing with window installation.
  8. On exterior, install backer-rod in joint between window frame and flashed rough framing. Apply weather barrier manufacturer recommended sealant at jambs and head, leaving sill unsealed. Apply sealants in accordance with sealant manufacturer's instructions and ASTM C1193.
  9. Position weather barrier head flap across head flashing. Adhere using flashing over the 45-degree seams.
  10. Tape top of window in accordance with manufacturer recommendations.
  11. On interior, install backer rod in joint between frame of window and flashed rough framing. Apply manufacturer recommended sealant around entire window interior to create air seal. Apply sealant in accordance with sealant manufacturer's instructions and ASTM C1193.
- G. Flashing at Flanged Window
  1. Attach weather barrier membrane apron under sill. Extend apron a min. of 10 inches beyond sides of rough opening, and below the rough opening to overlap the sill plate or the weather barrier below. Securely attach sides of apron to wall, leaving bottom free to overlap later weather barrier installation.
  2. Cut flashing a minimum of 12 inches longer than width of sill rough opening.
  3. Cover horizontal sill by aligning flashing edge with inside edge of sill. Adhere to rough opening across sill and up jambs a minimum of 6 inches.
  4. Fan flashing at bottom corners into face of wall. Firmly press in place. Mechanically fasten fanned edges.
  5. On exterior, apply continuous bead of sealant to wall or backside of window mounting flange across jambs and head. Do not apply sealant across sill.
  6. Coordinate with window installation.
  7. Complete flashing after installation of window/door:
     - a. Apply 4-inch wide strips of flashing at jambs overlapping entire mounting flange. Extend jamb flashing 1-inch above top of rough opening and below bottom edge of sill flashing.
     - b. Apply 4-inch wide strip of flashing as head flashing overlapping the mounting flange. Head flashing should extend beyond outside edges of both jamb flashings.
     - c. Position weather barrier head flap across head flashing. Adhere using 4-inch wide flashing over the 45-degree seams.
     - d. On interior, install backer rod in joint between frame of window and flashed rough framing. Apply sealant around entire window to create air seal.

ZCS ENGINEERING ARCHITECTURE
127 NW D Street, Grants Pass, Oregon 97526 | 541-479-3865

REEDSPORT FIRE DISTRICT
124 N 4TH ST.
REEDSPORT, OR 97467

REEDSPORT FIRE STATION 7

REEDSPORT FIRE DEPT. VOLUNTEER

REGISTERED ARCHITECT Jacob Zander OREGON CITY, OR 12412 STATE OF OREGON

△	DATE:	Description
2	Date 2	REV 2

PROJECT NO.	G-1468-21
DRAWN:	MJC,PWR,TBS
CHECKED:	JEZ
DATE:	01-24-23

SPECIFICATIONS

AS.1

95% CONSTRUCTION DOCUMENTS | BID / PERMIT SET

ONE INCH EQUALS FULL SCALE 4/25/2023 2:13:32 PM

07 31 13 ASPHALT SHINGLES

1.1 RELATED DOCUMENTS
- A. Drawings and general provisions of the Contract, including General and Supplementary Conditions and Division 01 Specification Sections, apply to this Section.

1.2 SUMMARY
- A. Section Includes:
  1. Glass-fiber reinforced asphalt shingles.
  2. Underlayment materials.
  3. Ridge vents.
  4. Metal flashing and trim.

1.3 QUALITY ASSURANCE
- A. Installer Qualifications: An authorized installer who is trained and approved by the manufacturer.

1.4 DELIVERY, STORAGE AND HANDLING
- A. Store roofing materials in a dry, well-ventilated location protected from weather, sunlight, and moisture in accordance with manufacturer's written instructions.
- B. Store underlayment rolls on end, on pallets or other raised surfaces. Do not double-stack rolls.
- C. Protect unused roofing materials from weather, sunlight, and moisture when left overnight or when roofing Work is not in progress.
- D. Handle, store, and place roofing materials in a manner to protect damage to roof deck or structural supporting members.

1.5 FIELD CONDITIONS
- A. Environmental Limitations: Proceed with installation only when existing and forecasted weather conditions permit product installation and related Work to be performed in accordance with manufacturer's written instructions and warranty requirements.
  1. Install self-adhering, polymer-modified bitumen sheet underlayment within the range of ambient and substrate temperatures recommended in writing by manufacturer.

1.6 WARRANTY
- A. Materials Warranty: Manufacturer agrees to repair or replace asphalt shingles that fail within specified warranty period.
  1. Failures include, but are not limited to:
     - a. Manufacturing defects.
  2. Materials Warranty Period: 25 years from date of Substantial Completion, prorated, with first 5 years nonprorated.
  3. Wind Speed Warranty Period: Asphalt shingles will resist blow-off or damage caused by wind speeds of up to 80 MPH for 5 years from date of Substantial Completion.
  4. Algae-Resistance Warranty Period: Asphalt shingles will not discolor for 5 years from date of Substantial Completion.
  5. Worksmanship Warranty Period: 5 years from date of Substantial Completion.
- B. Roofing Installer's Warranty: On warranty form at end of this Section, signed by Installer, in which Installer agrees to repair or replace components of asphalt shingle roofing that fail in materials or workmanship within specified warranty period.
  1. Warranty Period: 5 years from date of Substantial Completion.

2.1 PERFORMANCE REQUIREMENTS
- A. Exterior Fire-Test Exposure: Provide asphalt shingles and related roofing materials identical to those of assemblies tested for Class A fire resistance in accordance with ASTM E108 or UL 790 by Underwriters Laboratories or another testing and inspecting agency acceptable to authorities having jurisdiction. Identify products with appropriate markings of applicable testing agency.
- B. Wind Resistance: Provide asphalt shingles that comply with requirements of ASTM D3161/D3161M, Class F, and with ASTM D7158/D7158M, Class H.
- C. Energy Performance, ENERGY STAR: Provide asphalt shingles that are listed on the DOE's "ENERGY STAR Roof Product List" for steep-slope roof products.

2.2 GLASS-FIBER REINFORCED ASPHALT SHINGLES
- A. Laminated-Strip Asphalt Shingles: ASTM D3462/D3462M, laminated, multi-ply overlay construction; glass-fiber reinforced, mineral-granule surfaced, and self-sealing.
  1. Asphalt Shingle Manufacturer:
     - A. Certainteed Landmark AR
     - B. Malarkey Highlander NEX
     - C. Or approved equal
  2. Color and Blends: Match existing color

2.3 UNDERLAYMENT MATERIALS
- A. Synthetic Underlayment: UV-resistant polypropylene, polyolefin, or polyethylene polymer fabric with surface coatings or treatments to improve traction underfoot and abrasion resistance; evaluated and documented to be suitable for use as a roof underlayment under applicable codes by a testing and inspecting agency acceptable to authorities having jurisdiction.
  1. Manufacturer: Compatible with roofing manufacturer
- B. Self-Adhering, Polymer-Modified Bitumen Sheet: ASTM D1970/D1970M, minimum 50-mil (1.3-mm) thick sheet; glass-fiber-mat-reinforced, polymer-modified asphalt; with slip-resistant top surface and release backing; cold applied.

07 31 13 ASPHALT SHINGLES CONT.

2.5 ACCESSORIES
- A. Asphalt Roofing Cement: ASTM D4586/D4586M Type II, asbestos free.
- B. Elastomeric Flashing Sealant: ASTM C920, Type S, Grade NS, one-part, non-sag, elastomeric polymer sealant; of class and use classifications required to seal joints and remain watertight; recommended in writing by manufacturer for installation of flashing systems.
- C. Roofing Nails: ASTM F1667, aluminum, stainless steel, copper, or hot-dip galvanized-steel wire shingle nails, minimum 0.120-inch- (3-mm-) diameter, sharp-pointed, with a 3/8- to 7/16-inch- (10- to 11-mm-) diameter flat head and of sufficient length to penetrate 3/4 inch (19 mm) into solid wood decking or extend at least 1/8 inch (3 mm) through sheathing less than 3/4 inch (19 mm) thick.
  1. When nails are in contact with metal flashing, use nails made from same metal as flashing.
- D. Underlayment Nails: Aluminum, stainless steel, or hot-dip galvanized-steel wire nails with low-profile metal or plastic caps, 1-inch- (25-mm-) minimum diameter.

2.6 METAL FLASHING AND TRIM
- A. Comply with requirements in Section 076200 "Sheet Metal Flashing and Trim."
  1. Sheet metal:**Anodized aluminum**
- B. Fabricate sheet metal flashing and trim to comply with recommendations in SMACNA's "Architectural Sheet Metal Manual" that apply to design, dimensions, metal, and other characteristics of the item unless otherwise specified in this Section or indicated on Drawings.
  1. Apron Flashings: Fabricate with lower flange a minimum of **4 inches** over and **4 inches**beyond each side of downslope asphalt shingles and **6 inches** up the vertical surface.
  2. Step Flashings: Fabricate with a headlap of 2 inches (51 mm) and a minimum extension of **4 inches** over the underlying asphalt shingle and up the vertical surface.
  3. Cricket and Backer Flashings: Fabricate with concealed flange extending a minimum of **8 inches** beneath upslope asphalt shingles and **6 inches** beyond each sideand **6 inches** above the roof plane.
  4. Counterflashings: Fabricate to cover **4 inches** of base flashing measured vertically; and in lengths required so that no step exceeds **8 inches** and overall length is no more than **10 feet.**
     - a. Provide metal reglets/receivers for installation.
  5. Open Valley Flashings: Fabricate from metal sheet not less than **24 inches** wide in lengths not exceeding **10 feet**, with **1-inch** high, inverted-V profile water diverter at center of valley and equal flange widths of not less than **11 inches**
     - a. Hem flashing edges for fastening with metal cleats.
     - b. Add stiffening ribs in flashings to promote drainage.
  6. Drip Edges: Fabricate in lengths not exceeding **10 feet** with minimum 2-inch (51-mm) roof-deck flange and 1-1/2-inch (38-mm) fascia flange with 3/8-inch (10-mm) drip at lower edge.
  7. Vent-Pipe Flashings: ASTM B749, Type L51121, at least 1/16 inch (1.6 mm) thick. Provide lead sleeve sized to slip over and turn down into pipe, soldered to skirt at slope of roof, and extending at least 4 inches (102 mm) from pipe onto roof.

3.1 EXAMINATION
- A. Examine substrates, areas, and conditions, with Installer present, for compliance with requirements for installation tolerances and other conditions affecting performance of the Work.
  1. Examine roof sheathing to verify that sheathing joints are supported by framing and blocking or metal clips and that installation is within flatness tolerances.
  2. Verify that substrate is sound, dry, smooth, clean, sloped for drainage, and completely anchored and that provisions have been made for flashings and penetrations through asphalt shingles.
  3. Verify that vent stacks and other penetrations through roofing are installed and securely fastened.
- B. Prepare written report, endorsed by Installer, listing conditions detrimental to performance of the Work.
- C. Proceed with installation only after unsatisfactory conditions have been corrected.

07 3113 ASPHALT SHINGLES CONT.

3.2 INSTALLATION OF UNDERLAYMENT MATERIALS
- A. Comply with asphalt shingle and underlayment manufacturers' written installation instructions and with recommendations in NRCA's "The NRCA Roofing Manual: Steep-Slope Roof Systems" applicable to products and applications indicated unless more stringent requirements are specified in this Section or indicated on Drawings.
- B. Synthetic Underlayment:
  1. Install on roof deck parallel with and staring at the eaves.
     - a. Lap sides and ends as recommended in writing by manufacturer, but not less than 4 inches (102 mm) for side laps and 6 inches (152 mm) for end laps.
     - b. Stagger end laps between succeeding courses at interval recommended by manufacturer, but not less than 72 inches (1829 mm).
     - c. Fasten with underlayment nails in accordance with manufacturer's instructions.
     - d. Cover underlayment within roof system recommended in writing by manufacturer.
  2. Install in single layer on roofs sloped 4:12 and greater.
  3. Install in double layer on roofs sloped less than 4:12.
  4. Install synthetic underlayment over areas protected by self-adhering, polymer-modified bitumen sheet unless otherwise specified in this Section or indicated on Drawings.
     - a. Lap sides of underlayment over self-adhering sheet not less than 4 inches (102 mm) in direction to shed water.
     - b. Lap ends of underlayment not less than 6 inches (152 mm) over self-adhering sheet.
  5. Install fasteners in a grid pattern of 12 inches (305 mm) between side laps with 6-inch (152-mm) spacing at side and end laps.
  6. Terminate synthetic underlayment [**flush**] [**extended up not less than 4 inches (102 mm)**] **<Insert requirements>** against sidewalls, curbs, chimneys, and other roof projections.
- C. Self-Adhering, Polymer-Modified Bitumen Sheet: Install, wrinkle-free, on roof deck.
  1. Comply with low-temperature installation restrictions of underlayment manufacturer.
  2. Install lapped in direction that sheds water.
     - a. Lap sides not less than 4 inches (102 mm).
     - b. Lap ends not less than 6 inches (152 mm), staggered 24 inches (610 mm) between succeeding courses.
     - c. Roll laps with roller.
  3. Eaves: Extend from edges of eaves **24 inches** beyond interior face of exterior wall.
  4. Rakes: Extend from edges of rakes **24 inches** beyond interior face of exterior wall.
  5. Valleys: Extend from lowest to highest point **18 inches** on each side of centerline.
  6. Hips: Extend **18 inches** on each side.
  7. Ridges: Extend **36 inches** on each side
  8. Seismic Joint: Continuous **24 inches** wide centered on joint
  9. Cover underlayment within seven days.

07 3113 ASPHALT SHINGLES CONT.

3.3 INSTALLATION OF METAL FLASHING AND TRIM
- A. Install metal flashings and trim to comply with requirements in Section 076200 "Sheet Metal Flashing and Trim."
  1. Bed flanges of metal flashings using asphalt roofing cement or elastomeric flashing sealant.
- B. Apron Flashings: Extend lower flange over and beyond each side of downslope asphalt shingles and up the vertical surface.
- C. Step Flashings: Install with a headlap of 2 inches (51 mm) and extend over underlying shingle and up the vertical face.
  1. Install with lower edges of flashing just upslope of, and concealed by, butt of overlaying shingle.
  2. Fasten to roof deck only.
- D. Cricket and Backer Flashings: Install against roof-penetrating elements extending concealed flange beneath upslope asphalt shingles and beyond each side.
- E. Counterflashings: Coordinate with installation of base flashing and fit tightly to base flashing. Lap joints a minimum of 4 inches (102 mm) secured in a waterproof manner.
  1. Install in reglets or receivers.
- F. Rake Drip Edges: Install over underlayment materials and fasten to roof deck.
- G. Eave Drip Edges: Install below underlayment materials and fasten to roof deck.
- H. Pipe Flashings: Form flashing around pipe penetrations and asphalt shingles. Fasten and seal to asphalt shingles as recommended by manufacturer.

3.4 INSTALLATION OF ASPHALT SHINGLES
- A. Install asphalt shingles in accordance with manufacturer's written instructions and recommendations in[**ARMA's "Asphalt Roofing Residential Manual - Design and Application Methods"** and] NRCA's "NRCA Guidelines for Asphalt Shingle Roof Systems."
- B. Install starter strip along lowest roof edge, consisting of an asphalt shingle strip [**with tabs removed**] [**at least 7 inches (178 mm) wide**] with self-sealing strip face up at roof edge.
  1. Extend asphalt shingles **1/2 inch** over fasciae at eaves and rakes.
  2. Install starter strip along rake edge.
- C. Install first and remaining courses of laminated asphalt shingles stair-stepping diagonally across roof deck with manufacturer's recommended offset pattern at succeeding courses, maintaining uniform exposure.
- D. Install first and remaining courses of asphalt shingles stair-stepping diagonally across roof deck with **manufacturer's recommended** offset pattern at succeeding courses, maintaining uniform exposure.
- E. Fasten asphalt shingle strips with a minimum of **four** roofing nails, but not less than the number indicated in manufacturer's written instructions for roof slope and design wind speed indicated on Drawings and for warranty requirements specified in this Section.
  1. Locate fasteners in accordance with manufacturer's written instructions.
  2. Where roof slope is less than 4:12, hand seal self-sealing asphalt shingles to improve the shingles' positive bond by applying asphalt roofing cement spots between course overlaps after nailing the upper course.
  3. When ambient temperature during installation is below [**50 deg F**, hand seal self-sealing asphalt shingles by applying asphalt roofing cement spots between course overlaps after nailing the upper course.
- F. Hip and Ridge Shingles: Maintain same exposure of cap shingles as roofing-shingle exposure. Lap cap shingles at ridges to shed water away from direction of prevailing winds.
  1. Fasten with roofing nails of sufficient length to penetrate sheathing.
  2. Fasten ridge cap asphalt shingles to cover vent without obstructing airflow.

07 44 00 CEMENTITIOUS PANELS

1.1 SUMMARY
- A. Cementitious panel with battens
- B. Related Sections:
  2. Thermal Insulation
  3. Joint Sealants
  4. Painting
  5. Weather Barriers
  6. Sheet Metal Flashing and Trim

1.2 WARRANTY
- A. Manufacturer's Warranty: Provide manufacturer's 30-year limited warranty for fiber cement siding. Warranty to be appropriate for geographical location of this installation.
- B. Installer's Warranty: Provide installer's written 2-year warranty upon completion of work.

1.3 PERFORMANCE CRITERIA
- A. Fiber Cement Cladding to comply with ASTM C-1186, Type A, Grade II requirements.
- B. Surface Burning (ASTM E 84): Flame Spread= 0, Smoke Developed=5
- C. Freeze-Thaw: No damage or defects observed.
- D. Heat-Rain: No crazing, cracking, or other deleterious effects, surface or joint changes observed in any specimen.
- E. Fire Resistant (ASTM E-119): The wall assembly must successfully endure 60-minute fire exposure without developing excessive unexposed surface temperature or allowing flaming on the unexposed side of the assembly.
- F. Weather barrier to have 90% drainage efficiency complying with/ ASTM 2273.

2.1 PRODUCTS
- A. Manufacturers: See drawings for basis of design system or comparable product by one of, but not limited to, the following:
- B. Lap Siding
  1. LP1: James Hardie, HardiePlank HZ10 Lap Siding,
     - a. Select Cedarmill 8-1/4 inches with 7 inches exposure
  2. Or approved equal
- C. Vertical Siding
  1. CB2: James Hardie HardiePanel HZ10
     - a. Smooth Vertical siding panel 4 feet by 8 feet
  2. Or approved equal
- D. Soffit Panels
  1. HardieSoffit HZ10 soffit panel
     - A. Textured cedarmill non-vented, 24 inches by 8 feet
  2. Or approved equal
- A. Trim Boards
  1. Hardie Trim HZ10 boards
     - A. 5/4 boards, see detials for width.
     - B. Texture: Wood Grained
- D. Fiber Cement Cladding Panels and Boards: See Finish Schedule for board and plank types, dimensions, and finishes.
- E. Installation Accessories
  1. Fasteners
     - A. Lap Siding: Corrosion resistant fasteners, such as hot-dipped galvanized nails and screws appropriate to local building code and practices must be used. Do not use aluminum fasteners, staples, clipped head nails or fasteners that are not rated or designed for intended use.
     - B. Vertical Siding: Exposed stainless steel pan head screws, evely spaced and aligned on each panel
  2. Flashing: Flash all areas specified in manufacturer's instructions and shown in the drawings.
  3. Furring strips: plastic furring strips which resist deterioration due to water infiltration.
  4. Finishes: Factory applied sealer/primer, flat sheen. See 099000 Painting for cladding finish system.
  5. Weather Barrier: Use weather barrier for Cementitious Panel systems as specified in 07 25 00 Weather Barriers.

3.1 EXECUTION
- A. Fiber cement panels must be installed over vertical braced wood with minimum 7/16" OSB or plywood sheathing. Allowable stud spacing: 16" maximum.
- B. Surface preparation:
  1. Ensure drainage plane is intact and all penetrations are sealed and flashed.
  2. Examine site to ensure substrate conditions are within specification for proper installation.
  3. Do not install boards or components that appear to be damaged or defective. Do not install wet boards.
- C. Install metal Z flashing and provide a min. 1/4 inch gap at horizontal panel joints.
- D. Cement Panel Fastener Installation:
  1. Pre-drill panel with clearance hole for fasteners. Do not overdrive.
  2. Drive fasteners in perpendicular to siding and framing.
  3. Fasteners pattern & spacing:
     - a. Space fasteners 24" o.c. horizontally and 16" o.c. vertically. Start all spacing from center of panel.
     - b. Fastener position may be no closer than 3/4" in from panel edge and no closer than 2 inches away from corners.
  4. Do not countersink or fill over the fastener head.
  5. Fastener pattern to be aligned vertically and horizontally, equally spaced and centered on the panel.
  6. If fastener shears, add a fastener near to site and use a cementitious compound to fill the hole and use primer as necessary.
- E. Do not install siding less than 6 inches from surface of ground nor closer than 2 inches to roofs, patios, porches, and other surfaces where water may collect.
- F. Field cut edges shall be coated during the installation process using an exterior grade primer/sealer that is comparable with the type of paint used on project.
- G. Install self-adhering flashing membrane behind all changes of plane, corners, reveals, joint accessories and penetrations.

07 54 23 THERMOPLASTIC POLYOLEFIN (TPO) ROOF

1.1 SUMMARY
- A. Mechanically Fastened TPO membrane roofing system
- B. Roof insulation
- C. Traffic protection

1.2 QUALITY ASSURANCE
- A. Installer to be approved, authorized, or licensed by roofing system manufacturer to install manufacturer's product and that is eligible to receive manufacturer's warranty.
- B. Obtain components including roof insulation and fasteners from same manufacturer as membrane roofing or approved by manufacturer.

1.3 PERFORMANCE CRITERIA
- A. General Performance: Installed membrane roofing and base flashing shall withstand specified uplift pressures, thermally induced movement, and exposure to weather without failure due to defective manufacture, fabrication, installation, or other defects in construction. Membrane roofing and base flashing shall remain watertight.
- B. Material Compatibility: Provide roofing materials that are compatible with one another under conditions of service and application required, as demonstrated by roofing membrane manufacturer based on testing and field experience.
- C. Energy Performance: Provide roofing system with initial solar reflectance index not less than 78 when calculated according to ASTM E 1980.
- D. Minimum UL Class A fire rating.

1.4 WARRANTY
- A. Contractor Warranty: The contractor shall warrant the roof application with respect to workmanship and proper application for two years from the date of favorable inspection by the roof membrane manufacturer. Should any leaks covered under the warranty occur during this period, corrective action will be taken by the contractor to repair the roof to the satisfaction of the owner and the roof membrane manufacturer. All corrective work will be done at no cost to the owner or manufacturer.
- B. Manufacturer Warranty: Must be no-dollar limit type and provide for completion of repairs, replacement of membrane or total replacement of the roofing system at the then-current material and labor prices throughout the life of the warranty.
  1. Warranty Period: 30 years
  2. No exclusions for damage caused by ponding water or biological growth or for incidental or consequential damages.
  3. Issued direct from and serviced by the roof membrane manufacturer.
  4. Transferable for the full term of the warranty
  5. No additional charge for the warranty.

2.1 PRODUCTS
- A. Manufacturers: Comparable product by one of, but not limited to, the following:
  1. Carlisle SynTec Systems: Sure-Weld 80-mil Reinforced EXTRA
  2. Firestone Buildings Products
  3. GAF Materials Inc.
  4. Genflex Roofing Systems
  5. John Mansville
  6. Versico Inc
- B. TPO Membrane: Fabric-Reinforced Thermoplastic Polyolefin Sheet. ASTM D 6878, internally fabric or scrim reinforced, uniform, flexible TPO sheet.
  1. Thickness: 80 mil nominal
  2. Exposed Face Color: White
  3. Width: 10 feet minimum
  4. Length: 50 feet minimum
- C. Auxiliary Materials
  1. Sheet Flashing: Manufacturer's standard of same material, type, reinforcement, thickness, and color as TPO sheet membrane
  2. Factory Prefabricated Flashing: Flashings for pipes, curbs, inside and outside corners of same material, type, reinforcement, thickness, and color as TPO sheet membrane.
  3. Sealants and Adhesives: per roofing membrane manufacturer.
  4. Termination bars: Manufacturer's standard 1/4 by 3/8 inch oval holes, 12 inch o.c. predrilled stainless-steel or aluminum bars, approx. 3/4 inch by 1/8 inch thick; with stainless-steel or zinc plated steel meeting corrosion resistance provisions in FMG-4470 masonry anchors.
  5. Edge Detail: Fascia bar and cover and manufacturer's factory prefabricated, BOD: Carlisle SecurEdge 2000; drip edge, gravel stop and 2-piece compression metal edge.
  6. Vinyl coated metal: 24 ga, hot-dipped galvanized, grade 90 metal with a minimum of 17 mil of manufacturer's membrane laminated to one side.
- D. Cover Boards: ASTM C 1177/C1177M, glass-mat, water resistant gypsum substrate, 1/2" thick;
  1. Dens Deck; Georgia Pacific
  2. SecurShield
  3. Adhesive: Insulation manufacturer's recommended spray applied, low-rise, single component urethane adhesive: Insta Stik; Dow Co. or equal.
- E. Roof Insulation: Extruded polystyrene (XPS) rigid board insulation: Owens Corning Famular NGX 250, continuous, ASTM C578 Type IV, R-30 minimum.
- F. Walkways: Flexible walkways: factory-formed, non-porous, heavy-duty, slip-resistant, surface textured walkways pads or rolls, heat welded to roofing membrane and acceptable to membrane roofing system manufacturer.

3.1 EXECUTION
- A. Install cover boards over insulation with long joints in continuous straight lines with end joints staggered between rows. Stagger joints from joints in sheathing below a minimum of 6 inches in each direction. Loosely butt cover boards together and fasten to roof deck.
- B. Stagger joints of insulation boards and trim where necessary at roof drains so completed surface is flush. Fill gaps larger than 1/4 inch with insulation.
- C. Accurately align each prefabricated roofing section in order to maintain minimum overlaps per manufacturer.
- D. Penetrations: Utilize factory prefabricated flashings for penetrations such as pipes, equipment curbs, braces, and pitch pockets. These flashing shall be made of the same membrane material as the roof sections. Attach each flashing to the roof membrane using hot-air welds and terminate the flashing to the penetration per manufacturer's specification.
- E. Drains and Scuppers: Follow membrane manufacturer's specification to properly terminate the roofing sections at drains and scuppers. Clamping rings may be used to terminate the roof section at roof drains. If the drain does not have a clamping ring, or it cannot be used, a factory prefabricated drain boot must be used. Factory prefabricated flashing must be utilized for scuppers.
- F. Final Roof Inspection: Arrange for manufacturer's technical representative to inspect roofing installation on completion.

ZCS ENGINEERING ARCHITECTURE
127 NW D Street, Grants Pass, Oregon 97526 | 541-479-3865

REEDSPORT FIRE DISTRICT
124 N 4TH ST.
REEDSPORT, OR 97467

REEDSPORT FIRE STATION 7

REEDSPORT FIRE DEPT. VOLUNTEER

REGISTERED ARCHITECT Jacob Zander OREGON CITY, OR 12412 STATE OF OREGON

△	DATE:	Description

PROJECT NO.	G-1468-21
DRAWN:	MJC,PWR,TBS
CHECKED:	JEZ
DATE:	01-24-23

SPECIFICATIONS

AS.2

95% CONSTRUCTION DOCUMENTS | BID / PERMIT SET

ONE INCH EQUALS FULL SCALE

4/25/2023 2:13:32 PM

07 62 00 REAR VENTILATED FACADE SYSTEM

1.1 SUMMARY
- A. Wood plastic composite (WPC) board cladding for use in rainscreen applications to provide a rear-ventilated facade system (RVFS).

1.2 WARRANTY
- A. Manufacturer's Performance Warranty: Manufacturer's written materials warranty for long-term performance against manufacturing defects, including checks, splinters, and delamination, or damage from rot and fungal decay.
  1. Warranty Period: 10 years from date of Substantial Completion.
- B. Manufacturer's Stain and Fade Warranty: Manufacturer's written materials warranty for long-term performance against staining and color fade.
  1. Color Fade: Color change from light and weathering exposure not to exceed 5 Delta E (Hunter) units.
  2. Warranty Period: 10 years from date of Substantial Completion.

2.1 CAPPED COMPOSITE CLADDING
- A. Basis of Design:
  1. Fiberon Wildwood Eden Collection, Fiber Composites, LLC
  2. Or approved equal.
- B. Composition: Wood and plastic composite (WPC) core boards coated with polyethylene-based capping material and manufactured through a continuous co-extrusion process.
- C. Size:
  1. Thickness: 0.935 inch total thickness, 0.015 inch capping material thickness.
  2. Width: 6 nominal inches.
  3. Length: 12 feet.
- D. Board Edges: 1/8" inch edge radius.
- E. Gapping: The following open joint dimensions for the RVFS are required:
  1. Butted Boards: 1/4 inch to 1/32 inch open joints depending on temperature.
  2. Edge-To-Edge Boards: 3/16 inch open joints.
  3. Boards Adjacent to Walls or Posts: 1/4 inch open joints.
  4. Boards at Roof Interface: 1 inch open joints.
- F. Color: As selected by Architect.

2.2 MISCELLANEOUS MATERIALS
- A. General: Provide miscellaneous materials as recommended by the manufacturer.
- B. Weather Barrier: dark-colored weather barrier as specified for Rear Ventilated Facade Systems in 07 25 00 Weather Barriers.
- C. Furring: Non-wood continuous furring strip which conforms to manufacturer's specifications.
- D. Fasteners: Type 306 stainless steel or polymer-coated composite decking screw fasteners complying with ASTM C1002. Minimum #8 by 2-1/2 inch length for face fasteners and #8 by 2-3/4 inch length for WPC board ends.
  1. ACQ Rated Fasteners: Provide fasteners acceptable for alkaline copper quaternary (ACQ) pressure preservative treated wood attachment substrates.
  2. Polymer-Coated Screw Fasteners: Comply with ASTM B117 for corrosion resistance.

3.1 EXECUTION
- A. Examination
  1. Examine substrates to receive RVFS work and conditions under which the work will be performed.
  2. Verify:
     - a. Wall sheathing is in place and properly installed.
     - b. WRB is in place, continuous, and properly installed.
     - c. RVFS furring is level, plumb, and true to line, correctly placed, securely attached to building substrates. Maximum furring spacing, whether horizontal or vertical, not to exceed 16 inches on center.
     - d. Air cavity is continuous with minimum 3/4 inch unobstructed width. Unobstructed air intake (bottom) and exit (top) of at least 3/4 inch.
     - e. Flashings for penetrations, head of openings, and base of air cavity are properly installed to redirect moisture to the exterior.
     - f. Wood blocking and insect screens are in place as required to prevent intrusion by pests and not diminish ventilation/drainage performance.
- B. Preparation
  1. Comply with RVFS manufacturer's printed installation instructions.
  2. Protect adjacent surfaces not to receive RVFS.
- C. Installation
  1. Securely attach WPC boards to furring substrates. Fastener size, number, spacing, and minimum dimensions from board edges and ends according to RVFS manufacturer's current recommendations.
     - a. Cut and rout WPC boards using only approved carbide-tipped blades, to preclude frayed edge cuts.
     - b. Cut board ends square. 45 degree scarf-running butt joints in the field of cladding courses are acceptable.
     - c. Predrill holes located closer than 1-1/2 inches from ends of boards and 1 inch from board edges. Pre-drill holes in cladding boards three inches wide or less.
     - d. Install fasteners perpendicular to cladding board substrates and flush with board surface.
  2. Horizontal orientation:
     - a. Determine and begin at lowest point of cladding installation.
     - b. Butt joints to occur only over vertical furring and centered on furring. As WPC board courses are added, stagger butt joints in a consistent "stair step" manner.
     - c. Board lengths to span a minimum of three furring members.
     - d. Gapping: Provide minimum 3/16 inch spacing between board edges. Spacing at end of boards is temperature dependent; refer to RVFS manufacturer's published technical data for spacing dimensions.
  3. Vertical orientation:
     - a. Prior to installation, verify required horizontal and vertical furring strips are in place to receive vertically-orientated board installation.
     - b. For walls exceeding available board lengths, separate boards with a non-corrosive metal z-flashing. Allow 1/4 inch clearance between top of lower cladding boards to underside of z-flashing. Maintain 1/2 inch clearance between z-flashing and start of upper cladding boards.
     - c. Start cladding board installation by first securing the top of the board and then working downwards.
     - d. Using 3/16 inch spacers to maintain gapping, secure the next WPC board coarse starting from the top and working downwards.
     - e. Where a balanced symmetrical WPC board layout design requires less-than-full-width end boards, maintain a minimum 3 inch width for ripped boards. Increase board-to-board gapping to accommodate; not to exceed 5/16 inch.
- D. Cleaning and Protection
  1. Clean WPC boards according to RVFS manufacturer's printed maintenance instructions. Use only cleaning materials and methods acceptable to RVFS manufacturer.
  2. Repair any damage to adjacent surfaces and substrates due to work of this Section.
  3. Upon completion of work, protect for remainder of construction period.

07 62 00 SHEET METAL FLASHING AND TRIM

1.1 SUMMARY
- A. Manufactured reglets and counter flashing
- B. Formed roof-drainage sheet metal fabrications
- C. Formed wall sheet metal fabrications
- D. Formed equipment support flashing
- E. Self-adhered membrane flashing
- F. ABS downspouts
- G. Brake shape aluminum as closure pieces

1.2 PERFORMANCE CRITERIA
- A. Sheet metal flashing and trim assemblies shall withstand wind loads, structural movement, thermally induced movement, and exposure to weather without failure due to defective manufacture, fabrication, installation, or other defects in construction. Completed sheet metal flashing and trim shall not rattle, leak or loosen, and shall remain watertight.
- B. Sheet Metal Standard for Flashing and Trim: Comply with NCRA's "the NRCA Roofing Manual" and SMACNA's "Architectural Sheet Metal Manual" requirements for dimensions and profiles.
- C. SPRI Wind Design Standard: Manufacture and install copings complying with SPRI ES-1 and capable of resisting the following design pressure:
  1. Design Pressure: As indicated on Drawings, S0.1

2.1 PRODUCTS
- A. Metallic-Coated Steel Sheet: Provide Zinc-Coated (Galvanized) steel sheet according to ASTM A 653/A 653M, G90 coating designation; prepainting by coil-coating process comply with ASTM A 755/A755M
  1. Surface; Smooth, flat
  2. Exposed Coil-Coated Finish:
     - a. Two-Coat Fluoropolymer: AAMA 621. Fluoropolymer finish containing not less than 70 percent PVDF resin by weight in color coat.
     - b. Color: Where noted on drawings.
- B. Fasteners:
  1. Exposed Fasteners: Self-drilling, gasketed, with hex-washer head.
  2. Blind Fasteners: High-strength aluminum or stainless steel rivets suitable for metal
  3. Galvanized Steel Sheet: Series 300 stainless steel or hot-dip galvanized steel
- C. Sealant Tape: Pressure-sensitive, 100% solids, polyisobutylene compound sealant tape with release-paper backing. Provide permanently elastic, nonsag, nontoxic, nonstaining tape 1/2 inch wide by 1/8 inch thick.
- D. Elastomeric Sealant: ASTM C 920, x
- E. Butyl Sealant: ASTM C 1311, Type S, Grade NS, Color: gray;
  1. Tremco; Butyl Sealant
  2. DAP; Butyl-Flex
  3. Or equal
- F. Epoxy Seam Sealer: Two-part, noncorrosive, aluminum seam-cementing compound recommended by aluminum manufacturer for exterior nonmoving joints, including riveted joints
- G. Bituminous Coating: Cold-applied asphalt emulsion according to ASTM D 1187
- H. Self-Adhered Membrane Flashing: Min. 30 mils thick, consisting of slip-resistant polyethylene- or polypropylene-film top surface laminated to a layer of butyl - or SBS modified asphalt adhesive with release-paper backing; specifically designed to withstand high metal temperatures. Provide primer as recommended by manuf.
  1. Carlisle; CCW WIP 300HT
  2. W.R. Grace Co.; Grace Vycor V40 Self-Adhered Flashing
  3. Henry Co.; Blueskin PE200 HT
  4. Kirsch Building Products; Sharkskin Ultra SA
  5. Metal-Fab Manuf.; MetShield
  6. Owens-Corning; Weatherlock Metal High Temperature Underlayment.

3.1 EXECUTION
- A. Install sheet metal flashing and trim true to line, levels, slopes. Provide uniform, neat seams with minimum exposure of solder, welds, and sealant. Do not torch cut sheet metal flashing.
- B. Space cleats not more than 12 inches apart. Attache cleat with at least two fasteners. Bend tabs over fasteners.
- C. Where dissimilar metals contact each other, or where metal contacts pressure-treated wood or other corrosive substrates, protect against galvanic action or corrosion by painting contact surfaces with bituminous coating or other permanent separation.
- D. Expansion Provisions: Provide for thermal expansion of exposed flashing and trim. Space movement joints at max. 10 feet with no joints within 24 inches or corner or intersection. Form expansion joints with intermeshing hooked flanges, not less than 1 inch deep, filled with sealant concealed within joints.
  Self-adhering membrane flashing (SAF): Install wrinkle free, shingle fashion to shed water, with end laps of not less than 6 inches staggered 24 inches between courses. Cover SAF within 14 days. Provide a continuous layer of SAF below all parapet copings and as indicated on the drawings.

07 71 00 ROOF SPECIALTIES

1.1 SUMMARY
- A. Roof-edge drainage systems
- B. Related Section:
  1. Sheet Metal Flashing and Trim

1.3 PERFORMANCE CRITERIA
- A. General Performance: Roof specialties shall withstand exposure to weather and resist thermally induced movement without failure, rattling, leaking, or fastener disengagement due to defective manufacture, fabrication, installation, or other defects in construction.
- B. Thermal Movements: Allow for thermal movements from ambient and surface temperature changes to prevent buckling, opening of joints, hole elongation, overstressing of components, failure of joint sealants, failure of connections, and other detrimental effects. Provide clips that resist rotation and avoid shear stress as a result of thermal movements. Base calculations on surface temperatures of materials due to both solar heat gain and nighttime-sky heat loss.
  1. Temperature Change (range): 120 degrees F, ambient 180 degrees F, material surface

2.1 PRODUCTS
- A. Manufacturers: Subject to compliance with requirements, manufacturers include but are not limited to the following:
  1. Architectural Products Co.
  2. ATAS International Inc.
  3. Berger Building Products, Inc.
  4. Castle Metal Products
  5. Cheney Flashing Company
  6. FABRAL
  7. Hickman Company
  8. Klauer Manufacturing Co.
  9. Merchant AND Evans
  10. Metal Era, Inc
  11. Metal Fab Manuf.
  12. MM Systmes Corp.
  13. National Sheet Metal Systems, Inc
- B. Gutters: Manufactured in uniform section lengths not exceeding 10 feet, with matching corner units, ends, outlets tubes, and other accessories. Elevate back edge at least 1 inch above front edge. Furnish flat-stock gutter straps, gutter brackets, expansion joints, and expansion -joint covers fabricated from same metal as gutters.
  1. Material: Zinc-Coated Steel: Nominal 0.034 inch thickness
  2. Profile: Style B according to SMACNA's "Architectural Sheet Metal Manual:
  3. Corners: Factory mitered and continuously welded.
  4. Gutter Supports: Gutter brackets with finish matching the gutters.
  5. Gutter Accessories: Continuously hinged leaf guard of perforated metal designed to shed leaves.
- C. Downspouts: Corrugated rectangular complete with smooth-curve elbows, manufactured from the following exposed metal. Furnish with metal hangers, from same material as downspouts, and anchors.
  1. Zinc-Coated Steel: Nominal 0.028-inch thickness.

3.1 EXECUTION
- A. General: Install components to produce a complete roof-edge drainage system according to manufacturer's written instructions. Coordinate installation of roof perimeter flashing with installation of roof-edge drainage system.
- B. Join and seal gutter lengths. Allow for thermal expansion. Attach gutters to firmly anchored gutter supports spaced not more than 12 inches apart. Attach ends with rivets and solder to make watertight. Slope to downspouts.
- C. Join sections of downspouts with manufacturer's standard telescoping joints. Provide hangers with fasteners designed to hold downspouts securely to walls and 1 inch away from walls; locate fasteners at top and bottom and at approximately 48 inches o.c. Provide elbows at base of downspout to direct water away from building.

07 91 00 EXPANSION JOINTS

PART 1 GENERAL

1.1 SUMMARY
- A. Section Includes:
  1. Flanged bellows-type roof expansion joints.

1.2 PREINSTALLATION MEETINGS
- A. Preinstallation Conference: Conduct conference at Project site.

1.3 ACTION SUBMITTALS
- A. Product Data: For each type of product.
- B. Shop Drawings: For roof expansion joints.

1.4 INFORMATIONAL SUBMITTALS
- A. Qualification data.
- B. Product test reports.
- C. Sample warranty.

1.5 QUALITY ASSURANCE
- A. Installer Qualifications: Installer of roofing membrane.

1.6 WARRANTY
- A. Special Warranty: Manufacturer and Installer agree to repair or replace roof expansion joints and components that leak, deteriorate beyond normal weathering, or otherwise fail in materials or workmanship within specified warranty period.
  1. Warranty Period: Two years from date of Substantial Completion.
- B. Special Warranty on Painted Finishes: Manufacturer's standard form in which manufacturer agrees to repair finish or replace roof expansion joints that show evidence of deterioration of factory-applied finishes within specified warranty period.
  1. Warranty Period: Manufacturer's standard.

PART 2 PRODUCTS

2.1 WALL JOINT SEAL:
- A. Basis of Design Interior: Emseal Seismic Colorseal
- B. Description: Silicone coated, ultraviolet resistant, watertight, primary wall seal with factory-applied adhesive on one side.
- C. Form: Precompressed to less than nominal material size for installation into designed joint size equal to material nominal size.
- D. Movement capability: Plus and minus 50% (total 100%) of nominal material size.
- E. R-value: 2.15 per inch depth at nominal joint size compression, tested to ASTM C518.
- F. STC rating: 52 in STC 56 wall, tested to ASTM E90.
- G. OITC rating: 38 in OITC 38 wall, tested to ASTM E90.
- H. Air permeability: Maximum 0.02 liter per second per square meter, tested to ASTM E283 at 75 Pa.
- I. Water penetration: No water penetration, tested to ASTM E331 at 5000 Pa test pressure.
- J. Wind loading:
  1. 0.1 mm net deflection, tested to ASTM E330 at 2730 Pa or 150 MPH wind.
  2. 0.6 mm net deflection, tested to ASTM E330 at 4854 Pa or 200 MPH wind.
- K. Weathering: Sealing of outside wall joints per DIN 18542-1999 / G155-2013: Pass
- L. VOC Emissions: CDPH-1.2-2017: Pass
- M. Silicone: Field applied corner bead at face of seal to substrate interface, furnished by joint seal manufacturer, in same material and color as used in factory coating.

07 91 00 EXPANSION JOINTS CONT.

PART 3 EXECUTION

3.1 INSTALLATION, GENERAL
- A. Comply with manufacturer's written instructions for handling and installing roof expansion joints.
  1. Anchor roof expansion joints securely in place, with provisions for required movement. Use fasteners, protective coatings, sealants, and miscellaneous items as required to complete roof expansion joints.
  2. Install roof expansion joints true to line and elevation; and without warping, jogs in alignment, buckling, or tool marks.
  3. Provide for linear thermal expansion of roof-expansion-joint materials.
- B. Directional Changes: Install factory-fabricated units at directional changes to provide continuous, uninterrupted, and watertight joints.
- C. Transitions to Other Expansion-Control Joint Assemblies: Coordinate installation of roof expansion joints with other exterior expansion-control joint assemblies specified in Section 079513.16 "Exterior Expansion Joint Cover Assemblies" to result in watertight performance. Install factory-fabricated units at transitions between roof expansion joints and exterior expansion-control joint systems.
- D. Splices: Splice roof expansion joints to provide continuous, uninterrupted, and waterproof joints.
- E. Metal Protection: Protect metals against galvanic action by separating dissimilar metals from contact with each other or with corrosive substrates by painting contact surfaces with bituminous coating or by other permanent separation as recommended by manufacturer

07 92 00 JOINT SEALANTS

1.1 SUMMARY
- A. Acrylic Latex joint sealants
- B. Urethane joint sealants
- C. Silicone joint sealants
- D. Related Section:
  1. Butyl sealants in Roofing
  2. Glazing sealants in Glazing
  3. Fire-resistance-rated construction sealants in Firestopping

1.2 QUALITY ASSURANCE
- A. Preconstruction Field-Adhesion Testing: Before installing sealants, field test adhesion to Project joint substrates as follows:
  1. For joints with dissimilar substrates, verify adhesion to each substrate separately; extend cut along one side, verify adhesion to opposite side. Repeat procedure for opposite side.
- B. Compatibility: Provide joint sealants, backing, and other related materials that are compatible with on another and with joint substrates under conditions of service and application, as demonstrated by joint-sealant manufacturer, based on testing and field experience.
- C. Suitability for Immersion in Liquids: Where sealants are indicated for Use I for joints that will be continuously immersed in liquids, provide products that have undergone testing according to ASTM C 1247. Liquid used for testing sealants is deionized water,U.N.O..
- D. Stain-Test-Response Characteristics: Where sealants are specified to be non-staining to porous substrates, provide products that have undergone testing according to ASTM C 1248.
- E. Suitability for Contact with Food: Where sealants are indicated for joints that will come in contact with food, provide products that comply with 21 CFR 177.2600.

2.1 PRODUCTS
- A. Acrylic Latex Joint Sealants: ASTM C 834, Type O, Grade NF. Application: Perimeter joints between interior wall surfaces, frames of interior doors, windows, elevator entrances etc. Paintable.
  1. BASF Building Systems; Sonoloc
  2. Bostik Inc.; Chem-Calk 600
  3. May National Assoc.; Bondaflex 600
  4. Pecora Corp.; AC-20+
  5. Schnee-Morehead, Inc.; SM8200
  6. Tremco Inc.; Tremflex 834
- B. Acrylic Latex Sealants: ASTM C 834, Type O, Grade NF, non-staining, paintable. Application: Interior perimeter and concealed joints of acoustic partitions
  1. Miracle SCS-100
  2. Pecora Corp.; AC-20 FTR Acoustical and Insulation Sealant.
  3. US Gypsum Co.;SHEETROCK Acoustical Sealant.
- C. Urethane Joint Sealants: Type M, Grade NS, Class 25, Uses (exposure) T and NT, Uses (substrates) M, A, O Application: Exterior vertical and horizontal non traffic joints in CIP and precast concrete, exterior control and expansion joints, exterior perimeter joints at frames of doors, windows, and louvers, vertical joints on exposed surfaces of interior concrete, vertical control and expansion joints on exposed interior surfaces of exterior walls.
  1. BASF Building Systems; Sonolostic NP 2
  2. May National Assoc.; Bondaflex PUR 2 NS
  3. Pacific Polymers;Elasto-Thane 227 High Shore Type II
  4. Pecora Corp.; Dynatred
  5. Sika Corp.; Sikaflex - 2c NS or Sikaflex 2c EZ mix
  6. Tremco; Vulkem 240 FC or Vulkem 227
- D. Urethane Joint Sealants: Type S or M, Grade P, Class 50, Uses (exposure) T and NT, Uses (substrates) M, A, O (brick AND ceramic tile) Application:Interior ceramic tile expansion, control, contraction, and isolation joints in horizontal traffic surfaces, exterior horizontal nontraffic and traffic isolation and contraction joints in CIP concrete slabs.
  1. Type M (multi-component)
     - a. Polymeric Systems, Inc.; PSI-270
     - b. Sonneborn, Division of ChemRex; SL 2
     - c. Tremco Inc.; Dymeric 240 FC
     - d. Pecora Corp.; Dynatrol II-G
     - e. Sika Corp.; Sikaflex - 2c SL
  2. 2. Type S (single-component)
     - a. Polymeric Systems, Inc.; PSI-901
     - b. Pacific Polymers Int.; Elasto-Thane 230 LM Type II
- E. Silicone Joint Sealants: Type S, Grade NS, Class 50, Uses (exposure) NT, Uses (substrates) M, G, A, O (brick, galv. steel) Application:Exterior joints in stucco systems.
  1. Neutral-Curing Silicone Sealant
     - a. Dow Corning Corp.; 790
     - b. GE Silicones; SillPruf LM SCS2700
     - c. Tremco Inc.; Spectrem 1 (basic)
     - d. Pecora Corp.; 890
     - e. Sonneborn Division of ChemRex; Omniseal
  2. Siyl-Terminated Polyether Sealant
     - a. Sonneborn Division of ChemRex; 150 VLM
- F. Silicone Joint Sealants: Type S, Grade NS, Class 50, Uses (exposure) NT, Uses (substrates) M, G, A, O (brick, galv. steel) Application: Exterior joints between aluminum-framed entrances and storefronts and curtain wall systems.
  1. Dow Corning; 756 SMS
  2. GE Silicones; SilPruf NB SCS9000
- G. Silicone Joint Sealants: Type S, Grade NS, Class 25, Uses (exposure) NT, Uses (substrates) G, A, O (ceramic tile)Application: Interior joints between plumbing fixtures and adjoining walls, floors, and counters.
  1. Mildew-Resistant Neutral-Curing Silicone Sealant
     - a. Pecora Corp.; 898
  2. Mildew-Resistant Acid-Curing Silicone Sealant
     - a. Dow Corning; 786 Mildew Resistant
     - b. GE Silicones; Sanitary SCS1700
     - c. Sonneborn, Division of ChemRex; OmniPlus
     - d. Tremco; Tremsil 200 White

08 11 13 HOLLOW METAL DOORS AND FRAMES

1.1 RELATED DOCUMENTS
- A. Drawings and general provisions of the Contract, including General and Supplementary Conditions and Division 01 Specification Sections, apply to this Section.

1.2 SUMMARY
- A. Section Includes:
  1. Standard and custom hollow metal doors and frames.
  2. Steel sidelight, borrowed lite and transom frames.
  3. Louvers installed in hollow metal doors.
  4. Light frames and glazing installed in hollow metal doors.
- B. Related Sections:
  1. Division 01 Section "General Conditions".
  2. Division 04 Section "Unit Masonry" for embedding anchors for hollow metal work into masonry construction.
  3. Division 08 Section "Flush Wood Doors".
  4. Division 08 Section "Glazing" for glass view panels in hollow metal doors.
  5. Division 08 Section "Door Hardware".
  6. Division 09 Sections "Exterior Painting" and "Interior Painting" for field painting hollow metal doors and frames.
- C. Codes and References: Comply with the version year adopted by the Authority Having Jurisdiction.
  1. ANSI/SDI A250.8 - Recommended Specifications for Standard Steel Doors and Frames.
  2. ANSI/SDI A250.4 - Test Procedure and Acceptance Criteria for Physical Endurance for Steel Doors, Frames, Frames Anchors and Hardware Reinforcing.
  3. ANSI/SDI A250.6 - Recommended Practice for Hardware Reinforcing on Standard Steel Doors and Frames.
  4. ANSI/SDI A250.10 - Test Procedure and Acceptance Criteria for Prime Painted Steel Surfaces for Steel Doors and Frames.
  5. ANSI/SDI A250.11 - Recommended Erection Instructions for Steel Frames.
  6. ASTM A1008 - Standard Specification for Steel Sheet, Cold-Rolled, Carbon, Structural, High-Strength Low-Alloy and High-Strength Low-Alloy with Improved Formability.
  7. ASTM A653 - Standard Specification for Steel Sheet, Zinc-Coated (Galvanized) or Zinc-Iron Alloy-Coated (Galvannealed) by the Hot-Dip Process.
  8. ASTM A924 - Standard Specification for General Requirements for Steel Sheet, Metallic-Coated by the Hot-Dip Process.
  9. ASTM C 1363 - Standard Test Method for Thermal Performance of Building Assemblies by Means of a Hot Box Apparatus .
  10. ANSI/BHMA A156.115 - Hardware Preparation in Steel Doors and Frames.
  11. ANSI/SDI 122 - Installation and Troubleshooting Guide for Standard Steel Doors and Frames.
  12. ANSI/NFPA 80 - Standard for Fire Doors and Fire Windows; National Fire Protection Association.
  13. ANSI/NFPA 105: Standard for the Installation of Smoke Door Assemblies.
  14. NFPA 252 - Standard Methods of Fire Tests of Door Assemblies; National Fire Protection Association.
  15. UL 10C - Positive Pressure Fire Tests of Door Assemblies.
  16. UL 1784 - Standard for Air Leakage Tests of Door Assemblies.

1.3 SUBMITTALS
- A. Product Data: For each type of product indicated. Include construction details, material descriptions, core descriptions, hardware reinforcements, profiles, anchors, fire-resistance rating, and finishes.
- B. Door hardware supplier is to furnish templates, template reference number and/or physical hardware to the steel door and frame supplier in order to prepare the doors and frames to receive the finish hardware items.
- C. Shop Drawings: Include the following:
  1. Elevations of each door design.
  2. Details of doors, including vertical and horizontal edge details and metal thicknesses.
  3. Frame details for each frame type, including dimensioned profiles and metal thicknesses.
  4. Locations of reinforcement and preparations for hardware.
  5. Details of anchorages, joints, field splices, and connections.
  6. Details of accessories.
  7. Details of moldings, removable stops, and glazing.
  8. Details of conduit and preparations for power, signal, and control systems.
- D. Samples for Verification:
  1. Samples are only required by request of the architect and for manufacturers that are not current members of the Steel Door Institute.

1.4 QUALITY ASSURANCE
- A. Source Limitations: Obtain hollow metal doors and frames through one source from a single manufacturer wherever possible.
- B. Quality Standard: In addition to requirements specified, furnish SDI-Certified manufacturer products that comply with ANSI/SDI A250.8, latest edition, "Recommended Specifications for Standard Steel Doors and Frames".
- C. Fire-Rated Door Assemblies: Assemblies complying with NFPA 80 that are listed and labeled by a qualified testing agency, for fire-protection ratings indicated, based on testing at positive pressure according to UL10C (neutral pressure at 40" above sill) or UL 10C.
  1. Oversize Fire-Rated Door Assemblies Construction: For units exceeding sizes of tested assemblies, attach construction label certifying doors are built to standard construction requirements for tested and labeled fire rated door assemblies except for size.
  2. Temperature-Rise Limit: Where indicated and at vertical exit enclosures (stairwell openings) and exit passageways, provide doors that have a maximum transmitted temperature end point of not more than 450 deg F (250 deg C) above ambient after 30 minutes of standard fire-test exposure.
  3. Smoke Control Door Assemblies: Comply with NFPA 105.
     - a. Smoke "S" Label: Doors to bear "S" label, and include smoke and draft control gasketing applied to frame and on meeting stiles of pair doors.
- D. Fire-Rated, Borrowed-Light Frame Assemblies: Assemblies complying with NFPA 80 that are listed and labeled, by a testing and inspecting agency acceptable to authorities having jurisdiction, for fire-protection ratings indicated, based on testing according to NFPA 257. Provide labeled glazing material.
- E. Pre-Submittal Conference: Conduct conference in compliance with requirements in Division 01 Section "Project Meetings" with attendance by representatives of Supplier, Installer, and Contractor to review proper methods and procedures for installing hollow metal doors and frames and to verify installation of electrical knockout boxes and conduit at frames with electrified or access control hardware.

1.5 DELIVERY, STORAGE, AND HANDLING
- A. Deliver hollow metal work palletized, wrapped, or crated to provide protection during transit and Project site storage. Do not use non-vented plastic.
- B. Deliver welded frames with two removable spreader bars across bottom of frames, tack welded to jambs and mullions.
- C. Store hollow metal work under cover at Project site. Place in stacks of five units maximum in a vertical position with heads up, spaced by blocking, on minimum 4-inch high wood blocking. Do not store in a manner that traps excess humidity.
  1. Provide minimum 1/4-inch space between each stacked door to permit air circulation. Door and frames to be stacked in a vertical upright position.

1.6 PROJECT CONDITIONS
- A. Field Measurements: Verify actual dimensions of openings by field measurements before fabrication.

ZCS ENGINEERING ARCHITECTURE
127 NW D Street, Grants Pass, Oregon 97526 | 541-479-3865

REEDSPORT FIRE DISTRICT
124 N 4TH ST.
REEDSPORT, OR 97467

REEDSPORT FIRE STATION 7

REEDSPORT FIRE DEPT. VOLUNTEER

REGISTERED ARCHITECT Jacob Zander OREGON CITY, OR 12412 STATE OF OREGON

△	DATE:	Description

PROJECT NO.	G-1468-21
DRAWN:	MJC,PWR,TBS
CHECKED:	JEZ
DATE:	01-24-23

SPECIFICATIONS

AS.3

95% CONSTRUCTION DOCUMENTS | BID / PERMIT SET

ONE INCH EQUALS FULL SCALE 4/25/2023 2:13:33 PM

08 11 13 HOLLOW METAL DOORS AND FRAMES CONT.

1.7 COORDINATION
- A. Coordinate installation of anchorages for hollow metal frames. Furnish setting drawings, templates, and directions for installing anchorages, including sleeves, concrete inserts, anchor bolts, and items with integral anchors. Deliver such items to Project site in time for installation.
- B. Building Information Modeling (BIM) Support: Utilize designated BIM software tools and obtain training needed to successfully participate in the Project BIM processes. All technical disciplines are responsible for the product data integration and data reliability of their Work into the coordinated BIM applications.

1.8 WARRANTY
- A. Special Warranty: Manufacturer's standard form in which manufacturer agrees to repair or replace doors that fail in materials or workmanship within specified warranty period.
- B. Warranty includes installation and finishing that may be required due to repair or replacement of defective doors.

2.1 MANUFACTURERS
- A. Manufacturers: Subject to compliance with requirements, provide steel doors and frames from a SDI Certified manufacturer:
  1. CECO Door Products (C).
  2. Curries Company (CU).
  3. Pioneer Industries (PI).
  4. Security Metal Products (SMP).

2.2 MATERIALS
- A. Cold-Rolled Steel Sheet: ASTM A 1008/A 1008M, Commercial Steel (CS), Type B; suitable for exposed applications.
- B. Metallic-Coated Steel Sheet: ASTM A 653/A 653M, Commercial Steel (CS), Type B; with minimum G60 (Z180) or A60 (ZF180) metallic coating.
- C. Recycled Content of Steel Products: Postconsumer recycled content plus one-half of preconsumer recycled content not less than 38 percent.
- D. Frame Anchors: ASTM A 653/A 653M, Commercial Steel (CS), Commercial Steel (CS), Type B; with minimum G60 (Z180) or A60 (ZF180) metallic coating.

2.3 HOLLOW METAL DOORS
- A. General: Provide 1-3/4 inch doors of design indicated, not less than thickness indicated; fabricated with smooth surfaces, without visible joints or seams on exposed faces unless otherwise indicated. Comply with ANSI/SDI A250.8 and ANSI/NAAMM HMMA 867.
- B. Exterior Doors (Energy Efficient): Face sheets fabricated of commercial quality hot-dipped zinc coated steel that complies with ASTM A924 A60. Provide doors complying with requirements indicated below by referencing ANSI/SDI A250.8 for level and model, ANSI/SDI A250.4 for physical performance level, and HMMA 867 for door construction.
  1. Design: Flush Panel.
  2. Core Construction: Foamed in place polyurethane and steel stiffened laminated core with no stiffener face welds, in compliance with HMMA 867 "Laminated Core".
     - a. Provide 22 gauge steel stiffeners at 6 inches on-center internally welded at 5" on- center to integral core assembly, foamed in place polyurethane core chemically bonded to all interior surfaces. No stiffener face welding is permitted.
     - b. Thermal properties to rate at a fully operable minimum U-Factor 0.37 and R-Value 2.7, including insulated door, thermal-break frame and threshold.
     - c. Kerf Type Frames: Thermal properties to rate at a fully operable minimum U-Factor 0.38 and R-Value 2.6, including insulated door, kerf type frame, and threshold.
  3. Level/Model: Level 3 and Physical Performance Level A (Extra Heavy Duty), Minimum 16 gauge (0.053 inch - 1.3-mm) thick steel, Model 2.
  4. Vertical Edges: Vertical edges to be mechanically interlocked with hairline seam. Beveled Lock Edge, 1/8 inch in 2 inches (3 mm in 50 mm).
  5. Top and Bottom Edges: Reinforce tops and bottoms of doors with a continuous steel channel not less than 16 gauge, extending the full width of the door and welded to the face sheet. Doors with an inverted top channel to include a steel closure channel, screw attached, with the web of the channel flush with the face sheets of the door. Plastic or composite channel fillers are not acceptable.
  6. Hinge Reinforcement: Minimum 7 gauge (3/16") plate 1-1/4" x 9".
  7. Hardware Reinforcements: Fabricate according to ANSI/SDI A250.6 with reinforcing plates from same material as door face sheets.
- C. Interior Doors: Face sheets fabricated of commercial quality cold rolled steel that complies with ASTM A 1008/A 1008M. Provide doors complying with requirements indicated below by referencing ANSI/SDI A250.8 for level and model and ANSI/SDI A250.4 for physical performance level.
- D. Manufacturers Basis of Design:
  1. Curries Company (CU) - Polystyrene Core - 707 Series.
  2. Curries Company (CU) - Energy Efficient - 777 Trio-E Series.

2.4 HOLLOW METAL FRAMES
- A. General: Comply with ANSI/SDI A250.8 and with details indicated for type and profile.
- B. Exterior Frames: Fabricated of hot-dipped zinc coated steel that complies with ASTM A 653/A 653M, Coating Designation A60.
  1. Fabricate frames with mitered or coped corners. Profile as indicated on drawings.
  2. Frames: Minimum 16 gauge (0.053-inch -1.3-mm) thick steel sheet.
  3. Manufacturers Basis of Design:
     - a. Curries Company (CU) - M Series.
- C. Interior Frames: Fabricated from cold-rolled steel sheet that complies with ASTM A 1008/A 1008M.
  1. Fabricate frames with mitered or coped corners. Profile as indicated on drawings.
  2. Manufacturers Basis of Design:
     - a. CECO Door Products (C) - BU DU Series.
     - b. CECO Door Products (C) - SU Series.
     - c. Curries Company (CU) - M Series.
- D. Fire rated frames: Fabricate frames in accordance with NFPA 80, listed and labeled by a qualified testing agency, for fire-protection ratings indicated.
- E. Hardware Reinforcement: Fabricate according to ANSI/SDI A250.6 Table 4 with reinforcement plates from same material as frames.

2.5 FRAME ANCHORS
- A. Jamb Anchors:
  1. Masonry Type: Adjustable strap-and-stirrup or T-shaped anchors to suit frame size, formed from A60 metallic coated material, not less than 0.042 inch thick, with corrugated or perforated straps not less than 2 inches wide by 10 inches long; or wire anchors not less than 0.177 inch thick.
  2. Stud Wall Type: Designed to engage stud and not less than 0.042 inch thick.
  3. Compression Type for Drywall Slip-on (Knock-Down) Frames: Adjustable compression anchors.
- B. Floor Anchors: Floor anchors to be provided at each jamb, formed from A60 metallic coated material, not less than 0.042 inches thick.
- C. Mortar Guards: Formed from same material as frames, not less than 0.016 inches thick.

2.6 LIGHT OPENINGS AND GLAZING
- A. Moldings for Glazed Lites in Doors and Loose Stops for Glazed Lites in Frames: Minimum 20 gauge thick, fabricated from same material as door face sheet in which they are installed.

08 11 13 HOLLOW METAL DOORS AND FRAMES CONT.

2.7 ACCESSORIES
- A. Mullions and Transom Bars: Join to adjacent members by welding or rigid mechanical anchors.
- B. Grout Guards: Formed from same material as frames, not less than 0.016 inches thick.

2.8 FABRICATION
- A. Fabricate hollow metal work to be rigid and free of defects, warp, or buckle. Accurately form metal to required sizes and profiles, with minimum radius for thickness of metal. Where practical, fit and assemble units in manufacturer's plant. When shipping limitations so dictate, frames for large openings are to be fabricated in sections for splicing or splining in the field by others.
- B. Tolerances: Fabricate hollow metal work to tolerances indicated in ANSI/SDI A250.8.
- C. Hollow Metal Doors:
  1. Exterior Doors: Provide optional weep-hole openings in bottom of exterior doors to permit moisture to escape where specified.
  2. Glazed Lites: Factory cut openings in doors with applied trim or kits to fit. Factory install glazing where indicated.
- D. Hollow Metal Frames:
  1. Shipping Limitations: Where frames are fabricated in sections due to shipping or handling limitations, provide alignment plates or angles at each joint, fabricated of same thickness metal as frames.
  2. Welded Frames: Weld flush face joints continuously; grind, fill, dress, and make smooth, flush, and invisible.
     - a. Welded frames are to be provided with two steel spreaders temporarily attached to the bottom of both jambs to serve as a brace during shipping and handling. Spreader bars are for bracing only and are not to be used to size the frame opening.
  3. Sidelight and Transom Bar Frames: Provide closed tubular members with no visible face seams or joints, fabricated from same material as door frame. Fasten members at crossings and to jambs by butt welding.
  4. High Frequency Hinge Reinforcement: Provide high frequency hinge reinforcements at door openings 48-inches and wider with mortise butt type hinges at top hinge locations.
  5. Continuous Hinge Reinforcement: Provide welded continuous 12 gauge straps for continuous hinges specified in hardware sets in Division 08 Section "Door Hardware."
  6. Provide countersunk, flat- or oval-head exposed screws and bolts for exposed fasteners unless otherwise indicated for removable stops, provide security screws at exterior locations.
  7. Mortar Guards: Provide guard boxes at back of hardware mortises in frames at all hinges and strike preps regardless of grouting requirements.
  8. Floor Anchors: Weld anchors to bottom of jambs and mullions with at least four spot welds per anchor.
  9. Jamb Anchors: Provide number and spacing of anchors as follows:
     - a. Stud Wall Type: Locate anchors not more than 18 inches from top and bottom of frame. Space anchors not more than 32 inches o.c. and as follows:
       - Three anchors per jamb up to 60 inches high.
       - Four anchors per jamb from 60 to 90 inches high.
       - Five anchors per jamb from 90 to 96 inches high.
       - Five anchors per jamb plus 1 additional anchor per jamb for each 24 inches or fraction thereof above 96 inches high.
       - Two anchors per head for frames above 42 inches wide and mounted in metal stud partitions.
  10. Door Silencers: Except on weatherstripped or gasketed doors, drill stops to receive door silencers. Silencers to be supplied by frame manufacturer regardless if specified in Division 08 Section "Door Hardware".
- E. Hardware Preparation: Factory prepare hollow metal work to receive template mortises hardware; include cutouts, reinforcement, mortising, drilling, and tapping according to the Door Hardware Schedule and templates furnished as specified in Division 08 Section "Door Hardware."
  1. Locate hardware as indicated, or if not indicated, according to ANSI/SDI A250.8.
  2. Reinforce doors and frames to receive non-template, mortised and surface mounted door hardware.
  3. Comply with applicable requirements in ANSI/SDI A250.6 and ANSI/DHI A115 Series specifications for preparation of hollow metal work for hardware.
  4. Coordinate locations of conduit and wiring boxes for electrical connections with Division 26 Sections.

2.9 STEEL FINISHES
- A. Prime Finishes: Doors and frames to be cleaned, and chemically treated to insure maximum finish paint adhesion. Surfaces of the door and frame exposed to view to receive a factory applied coat of rust inhibiting shop primer.
  1. Shop Primer: Manufacturer's standard, fast-curing, lead and chromate free primer complying with ANSI/SDI A250.10 acceptance criteria; recommended by primer manufacturer for substrate; and compatible with substrate and field-applied coatings.

3.1 EXAMINATION
- A. Examine substrates, areas, and conditions, with Installer present, for compliance with requirements for installation tolerances and other conditions affecting performance of the Work.
- B. General Contractor to verify the accuracy of dimensions given to the steel door and frame manufacturer for existing openings or existing frames (strike height, hinge spacing, hinge back set, etc.).
- C. Proceed with installation only after unsatisfactory conditions have been corrected.

3.2 PREPARATION
- A. Remove welded in shipping spreaders installed at factory. Restore exposed finish by grinding, filling, and dressing, as required to make repaired area smooth, flush, and invisible on exposed faces.
- B. Prior to installation, adjust and securely brace welded hollow metal frames for square, level, twist, and plumb condition.
- C. Tolerances shall comply with SDI-117 "Manufacturing Tolerances Standard Steel Doors and Frames."
- D. Drill and tap doors and frames to receive non-template, mortised, and surface-mounted door hardware.

08 11 13 HOLLOW METAL DOORS AND FRAMES CONT.

3.3 INSTALLATION
- A. General: Install hollow metal work plumb, rigid, properly aligned, and securely fastened in place; comply with Drawings and manufacturer's written instructions.
- B. Hollow Metal Frames: Install hollow metal frames of size and profile indicated. Comply with ANSI/SDI A250.11 and NFPA 80 at fire rated openings.
  1. Set frames accurately in position, plumbed, leveled, aligned, and braced securely until permanent anchors are set. After wall construction is complete and frames properly set and secured, remove temporary braces, leaving surfaces smooth and undamaged. Shim as necessary to comply with installation tolerances.
  2. Floor Anchors: Provide floor anchors for each jamb and mullion that extends to floor, and secure with post-installed expansion anchors.
  3. Masonry Walls: Coordinate installation of frames to allow for solidly filling space between frames and masonry with mortar.
  4. Grout Requirements: Do not grout head of frames unless reinforcing has been installed in head of frame. Do not grout vertical or horizontal closed mullion members.
- C. Hollow Metal Doors: Fit hollow metal doors accurately in frames, within clearances specified below. Shim as necessary.
  1. Non-Fire-Rated Standard Steel Doors:
     - a. Jambs and Head: 1/8 inch plus or minus 1/16 inch.
     - b. Between Edges of Pairs of Doors: 1/8 inch plus or minus 1/16 inch.
     - c. Between Bottom of Door and Top of Threshold: Maximum 3/8 inch.
     - d. Between Bottom of Door and Top of Finish Floor (No Threshold): Maximum 3/4 inch.
  2. Fire-Rated Doors: Install doors with clearances according to NFPA 80.
- D. Field Glazing: Comply with installation requirements in Division 08 Section "Glazing" and with hollow metal manufacturer's written instructions.

3.4 ADJUSTING AND CLEANING
- A. Final Adjustments: Check and readjust operating hardware items immediately before final inspection. Leave work in complete and proper operating condition. Remove and replace defective work, including hollow metal work that is warped, bowed, or otherwise unacceptable.
- B. Remove grout and other bonding material from hollow metal work immediately after installation.
- C. Prime-Coat and Painted Finish Touchup: Immediately after erection, sand smooth rusted or damaged areas of prime coat, or painted finishes, and apply touchup of compatible air drying, rust-inhibitive primer, zinc rich primer (exterior and galvanized openings) or finish paint.

3.5 FIELD QUALITY CONTROL
- A. Field Inspection (Punch Report): Reference Division 01 Sections "Closeout Procedures". Produce project punch report for each installed door opening indicating compliance with approved submittals and verification hardware is properly installed, operating and adjusted. Include list of items to be completed and corrected, indicating the reasons or deficiencies causing the Work to be incomplete or rejected.
  1. Organization of List: Include separate Door Opening and Deficiencies and Corrective Action Lists organized by Mark, Opening Remarks and Comments, and related Opening Images and Video Recordings.

08 14 16 FLUSH WOOD DOORS

1.1 SECTION INCLUDES
- A. Flush wood doors; flush and flush glazed configuration; fire-rated and non-rated.

1.2 RELATED REQUIREMENTS
- A. Section 081113 Hollow Metal Doors and Frames.
- B. Section 087100 Door Hardware.
- C. Section 088000 Glazing.

1.3 REFERENCE STANDARDS
- A. ASTM C1048 - Standard Specification for Heat-Strengthened and Fully Tempered Flat Glass; 2018.
- B. AWI/AWMAC/WI (AWS) - Architectural Woodwork Standards; 2014, with Errata (2016).
- C. AWMAC/WI (NAAWS) - North American Architectural Woodwork Standards, U.S. Version 3.1; 2016, with Errata (2017).
- D. NFPA 80 - Standard for Fire Doors and Other Opening Protectives; 2019.
- E. WDMA I.S. 1A - Interior Architectural Wood Flush Doors; 2013.

1.4 SUBMITTALS
- A. Product Data: Indicate door core materials and construction; veneer species, type and characteristics.
- B. Shop Drawings: Show doors and frames, elevations, sizes, types, swings, undercuts, beveling, blocking for hardware, factory machining, factory finishing, cutouts for glazing and other details.
- C. Samples: Submit two samples of door veneer, 6 by 6 inch (150 by 150 mm) in size illustrating wood grain, stain color, and sheen.
- D. Manufacturer's Installation Instructions: Indicate special installation instructions.
- E. Specimen Warranty.
- F. Warranty, executed in Owner's name.

1.5 QUALITY ASSURANCE
- A. Manufacturer Qualifications: Company specializing in manufacturing the products specified in this section, with not less than three years of documented experience.
- B. Installer Qualifications: Company specializing in performing work of the type specified in this section, with not less than three years of documented experience.

1.6 DELIVERY, STORAGE, AND HANDLING
- A. Package, deliver and store doors in accordance with specified quality standard.
- B. Accept doors on site in manufacturer's packaging, and inspect for damage.
- C. Protect doors with resilient packaging sealed with heat shrunk plastic; do not store in damp or wet areas or areas where sunlight might bleach veneer; seal top and bottom edges with tinted sealer if stored more than one week, and break seal on site to permit verification.

1.7 WARRANTY
- A. See Section 017800 - Closeout Submittals, for additional warranty requirements.
- B. Interior Doors: Provide manufacturer's warranty for the life of the installation.
- C. Include coverage for delamination of veneer, warping beyond specified installation tolerances, defective materials, and telegraphing core construction.

2.1 WARRANTY
- A. High Pressure Decorative Laminate (HDPL) Faced Doors:
  1. VT Industries, Inc.
  2. Oregon Door; Architectural Series.

2.2 DOORS AND PANELS
- A. Doors: See drawings for locations and additional requirements.
- B. Interior Doors: 1-3/4 inches (44 mm) thick unless otherwise indicated; flush construction.

2.3 DOOR AND PANEL CORES
- A. Non-Rated Solid Core and 20 Minute Rated Doors: Type particleboard core (PC), plies and faces as indicated.

2.4 DOOR FACINGS
- A. Veneer Facing for Transparent Finish: White Maple (all sapwood) to match existing stain, veneer grade in accordance with quality standard indicated, plain sliced (flat cut), with book match between leaves of veneer, running match of spliced veneer leaves assembled on door or panel face.
  1. Vertical Edges: Any option allowed by quality standard for grade.
- B. Veneer Facing for Opaque Finish: Medium density overlay (MDO), in compliance with indicated quality standard.

2.5 DOOR CONSTRUCTION
- A. Fabricate doors in accordance with door quality standard specified.
- B. Cores constructed with stiles and rails.
- C. Glazed Openings: Non-removable stops on non-secure side; sizes and configurations as indicated on drawings.
- D. Factory machine doors for hardware other than surface-mounted hardware, in accordance with hardware requirements and dimensions.
- E. Factory fit doors for frame opening dimensions identified on shop drawings, with edge clearances in accordance with specified quality standard.
- F. Provide edge clearances in accordance with the quality standard specified.

2.6 FINISHES - WOOD VENEER DOORS
- A. Finish work in accordance with AWI/AWMAC/WI (AWS) or AWMAC/WI (NAAWS), Section 5 - Finishing for grade specified and as follows:
  1. Transparent:
     - a. As selected by Architect from manufacturer's full range.
     - b. Sheen: Satin.

2.7 ACCESSORIES
- A. Hollow Metal Door Frames: See Section 081113.
- B. Glazed Openings:
  1. Heat-Strengthened and Fully Tempered Glass: ASTM C1048.
  2. Glazing: Single vision units, 1/4 inch (6.4 mm) thick glass.
  3. Tint: Clear.
- C. Glazing Stops: Wood, of same species as door facing, butted corners; prepared for countersink style tamper proof screws.

3.1 EXAMINATION
- A. Verify existing conditions before starting work.
- B. Verify that opening sizes and tolerances are acceptable.
- C. Do not install doors in frame openings that are not plumb or are out-of-tolerance for size or alignment.

3.2 INSTALLATION
- A. Install doors in accordance with manufacturer's instructions and specified quality standard.
  1. Install fire-rated foors in accordance with NFPA 80 requirements.
- B. Factory-Finished Doors: Do not field cut or trim; if fit or clearance is not correct, replace door.
- C. Use machine tools to cut or drill for hardware.
- D. Coordinate installation of doors with installation of frames and hardware.
- E. Coordinate installation of glazing.

3.3 TOLERANCES
- A. Comply with specified quality standard for fit and clear tolerances.
- B. Comply with specified quality standard for telegraphing, warp, and squareness.

3.4 ADJUSTING
- A. Adjust doors for smooth and balanced door movement.
- B. Adjust closers for full closure.

08 36 13 SECTIONAL DOORS

1.1 SUMMARY
- A. Glazed Aluminum Sectional Overhead Doors.

1.2 DESIGN / PERFORMANCE REQUIREMENTS
- A. Wind loads: Design and size components to withstand loads caused by pressure and suction of wind acting normal to plane of wall as calculated in accordance with applicable code.
  1. Design positive pressure of 25.9 lb/sq ft
  2. Design negative pressure of -31.6 lb/sq ft
- B. Seismic Performance: Provide sectional overhead doors that withstand the effects of earthquake motions determined in accordance with ASCE standards.
  1. Component Importance Factor: 1.5.
- C. Wiring Connections: Requirements for electrical characteristics.
  1. Verify in field.
- D. Single-source Responsibility: Provide doors, tracks, motors, and accessories from one manufacturer for each type of door. Provide secondary components from source acceptable to manufacturer of primary components.

1.3 SUBMITTALS
- A. Shop Drawings: Indicate opening dimensions and required tolerances, connection details, anchorage spacing, hardware locations, and installation details.
- B. Product Data: Show component construction, anchorage method, hardware, and accessories.
- C. Samples: Submit two panel finish samples, 12x12 inch in size, illustrating color and finish.

2.1 MANUFACTURERS
- A. Acceptable Manufacturer: Wayne Dalton; 2501 S. State Highway 121 Business, Suite 200, Lewisville, TX 75607. ASD. Phone: (800) 827-3667; Web Site: www.wayne-dalton.com. Email: info@wayne-dalton.com.
- B. Requests for substitutions will be considered in accordance with provisions of Section

2.2 GLAZED ALUMINUM SECTIONAL OVERHEAD DOORS
- A. Door assembly: Stile and rail assembly of aluminum alloy 6063-T6, 1-3/8 inch thick stiles and rails, joined with self tapping screws.
  1. Rails: Top and bottom rails with 3-1/2 inches wide, lower intermediate rail 1-3/8 inches, upper rail 1-5/8 inches, minimum wall thickness 0.062 inch.
  2. Stiles: Top, bottom, and end stiles are 3-1/2 inches wide, center stile 3 inches wide, minimum wall thickness 0.062 inch.
  3. Springs:
     - a. Standard cycle spring: 10,000 cycles.
  4. Glazing:
     - a. 1/8 inch (3 mm) Clear Tempered glass.
- B. Finish and Color:
  1. Powder Coating Finish: Color as selected by Architect from manufacturer's standard colors.
- C. Windload Design: Provide to meet the Design/Performance requirements specified.
- D. Hardware: Galvanized steel hinges and fixtures. Ball bearing rollers with hardened steel races.
- E. Lock:
  1. Interior mounted slide lock.
- F. Weatherstripping:
  1. Flexible bulb-type strip at bottom section.
  2. Flexible Jamb seals.
  3. Flexible Header seals.
- G. Track: Provide track as recommended by manufacturer to suit loading required and clearances available.
  1. Size:
     - a. 2 inch (51 mm).
  2. Type:
     - a. Low headroom.
  3. Horizontal track shall be reinforced with continuous angle of adequate length and gauge to minimize deflection.
- H. Electric Motor Operation: Provide UL listed electric operator, equal to Genie Commercial Operators, size and type as recommended by manufacturer to move door in either direction at not less than 2/3 foot nor more than 1 foot per second.
  1. Standard Duty.
     - a. Model T - trolley.
- I. Entrapment Protection: Required for momentary contact, includes radio control operation.
  1. (2) Sets of photo safety eyes
- J. Operator Controls:
  1. Push-button operated control stations with open, close, and stop buttons.
     - a. Quantity: Provide (1) each at wall location adjacent to door.
  2. Surface mounted.
  3. Interior locations.
     - a. Refer to Plans for mounting location.
  4. Special operation:
     - a. Radio control operation.
       - i. Provide (4) remote controllers for each door.

3.1 EXECUTION
- A. Installation:
  1. Install door unit assembly in accordance with manufacturer's instructions.
  2. Anchor assembly to wall construction and building framing without distortion or stress.
  3. Securely brace door tracks suspended from structure. Secure tracks to structural members only.
  4. Fit and align door assembly including hardware.
  5. Coordinate installation of electrical service. Complete power and control wiring from disconnect to unit components.
  6. Install perimeter trim and closures.
  7. Mount bottom reflector for the photo-electric switch at 18 inches above the top of concrete slab. Mount the photo cell at 42 inches, diagonally across the opening aimed at an angle to hit the reflector so as to intercept the fire apparatus body if in the door opening.
  8. Mount remote control receiver for hand held transmitters at +60" A.F.F. Verify exact locations with Owner prior to Installation.

08 80 00 GLAZING

1.1 SUMMARY
- A. Glazing for windows

1.3 PERFORMANCE CRITERIA
- A. General: Installed glazing systems shall withstand normal thermal movement and wind and impact loads (where applicable) without failure, including loss or glass breakage attributable to the following: defective manufacture, fabrication, or installation; failure of sealants or gaskets to remain watertight and airtight; deterioration of glazing materials; or other defects in construction.
- B. Thermal movements: allow for thermal movements from ambient and surface temperature changes acting on glass framing members and glazing components: Temperature change 120 deg F ambient; 180 deg F material surface.
- C. Safety glazing labeling: where safety glazing labeling is indicated, permanently mark glazing with certification label of the SGCC or another certification agency acceptable to authorities having jurisdiction or the manufacturer. Label shall indicate manufacturer's name, type of glass, thickness, and safety glazing standard with which glass complies.

2.1 PRODUCTS
- A. Insulating Glass Units: Factory-assembled units consisting of sealed lites of glass separated by a dehydrated interspace, qualified according to ASTM E 2190, and complying with other requirements specified.
  1. Sealing system: Dual seal, with manufacturer's standard primary and secondary.
  2. Spacer: Manufacturer's standard spacer material and construction
  3. Desiccant: Molecular sieve or silica gel, or blend of both.
- B. Solar Control Low-E Insulating Glass: Basis of Design Product: Oldcastle Glass; PPG Solarban 60 on Clear Low E #2
  1. Overall unit thickness and thickness of each lite: 1 inch and 1/4 inch
  2. Interspace content: air
  3. Indoor Lite: Type 1 (transparent glass, flat),class 1 float glass, annealed.
  4. Outdoor Lite: Type 1 (transparent glass, flat), class 2 (heat absorbing and light reducing) float glass, annealed.
  5. Low-E Coating: Sputtered on second surface.
  6. Visible Light Transmittance: 35 percent
  7. Solar Heat Gain Coefficient: 0.27-0.31
  8. Outdoor Visible Reflectance: 6 percent
  9. Relative Heat Gain: 58-66

3.1 EXECUTION
- A. Protect glass edges from damages during handling and installation. Remove damaged glass from Project site and legally dispose of off Project site. Damaged glass is glass with edge damage or other imperfections that, when installed, could weaken glass and impair performance and appearance.
- B. Provide spacers for glass lites where length plus width is larger than 50 inches. Locate spacers directly opposite each other on both inside and outside faces of glass. Install correct size and spacing to preserve required face clearances. Provide 1/8 inch minimum bite of spacers on glass and use thickness equal to sealant width. With glazing tape, use thickness slightly less than final compressed thickness of tape.
- C. Protect exterior glass from damage immediately after installation by attaching crosses streamers to framing held away from glass. Do not apply markers to glass surface. Remove nonpermanent labels and clean surfaces.
- D. Wash glass on both exposed surfaces in each area of Project not more than four days before date scheduled for inspections that establish date of substantial completion.

09 21 16 GYPSUM BOARD ASSEMBLIES

1.1 SUMMARY
- A. Interior gypsum wallboard
- B. Exterior gypsum sheathing
- C. Cementitious backer board

2.1 PRODUCTS
- A. Gypsum Wallboard: ASTM C 36, tapered, 5/8-inch thickness
- B. Moisture and Mold Resistant Gypsum Wallboard: ASTM C1396,ASTM D3273, regular, tapered, 5/8" thickness
- C. Cementitious Backer Board: ANSI A118.9 or ASTM C1325, thickness 5/8-inch
  1. Custom Building Products: Wonderboard
  2. USG Corporation: Durock Cement Board
- D. Trim Accessories: Corner beads, edge trim, and control joints complying with ASTM C 1047. Material: formed metal, plastic, or metal combined with paper. Metal to be sheet steel zinc-coated by hot-dip process or electrolytic processes, or with aluminum or rolled zinc.

3.1 EXECUTION
- A. On ceilings, apply gypsum panels prior to wall/partition board application to the greatest extent possible. Gypsum panels can be installed parallel to framing at max. 16-inches on center, perpendicular to framing at max. 24-inches on center.
- B. On walls, install gypsum panels vertically (parallel to framing) on framing at max. 24-inches on center. Stagger abutting end joints of adjacent panels not less than on framing member.
- C. Control joints and expansion joints:
  1. Partitions or ceilings: where element crosses a construction joint (expansion or control) in the base building structure.
  2. Partitions: uninterrupted run in a straight plane shall not exceed 30 lineal feet.
  3. Ceilings (with perimeter relief): linear direction shall not exceed 50 feet and total area between control joints shall not exceed 2,500 square feet.
  4. Ceilings (without perimeter relief): Linear direction shall not exceed 30 feet and total area between control joints shall not exceed 900 square feet.
  5. Ceilings, where framing members change direction.
  6. Where a control joint occurs in an acoustical or fire-rated system, blocking shall be provided behind the control joint by using a backing material such as 5/8-in Type X gypsum or mineral wool.
- D. Level of Finish: Provide the following level of gypsum board finish per GA-214
  1. Level 1 for ceiling plenum areas, concealed areas, and where indicated, unless a higher level of finish is required for fire-resistive-rated assemblies.
  2. Level 2 for gypsum board used as a substrate for tile
  3. Level 3 for spray on texture, light orange peel
  4. Level 4 for gypsum board to be painted.
  5. Level 5 for gypsum board where applied graphic wall coverings are indicated.

ZCS ENGINEERING ARCHITECTURE
127 NW D Street, Grants Pass, Oregon 97526 | 541-479-3865

REEDSPORT FIRE DISTRICT
124 N 4TH ST.
REEDSPORT, OR 97467

REEDSPORT FIRE STATION 7

REEDSPORT FIRE DEPT. VOLUNTEER

REGISTERED ARCHITECT Jacob Zander OREGON CITY, OR 12412 STATE OF OREGON

△	DATE:	Description

PROJECT NO.	G-1468-21
DRAWN:	MJC,PWR,TBS
CHECKED:	JEZ
DATE:	01-24-23

SPECIFICATIONS

AS.4

95% CONSTRUCTION DOCUMENTS | BID / PERMIT SET

ONE INCH EQUALS FULL SCALE 4/25/2023 2:13:34 PM

09 51 13 ACOUSTICAL CEILING PANEL

1.1 SUMMARY
A. Acoustical panels and suspension system for interior ceilings

1.2 PERFORMANCE REQUIREMENTS
A. Seismic Performance: Suspende zcoustical ceiling shall withstand the effects of earthquake motions determined according to ASCE/SEI 7.
B. Surface-Burning Characteristics: Comply with ASTM E 84:
1. Flame-Spread Index: Class A according to ASTM E 1264
2. Smoke-Developed Index: 50 or less
3. Ceilings (with perimeter relief): linear direction shall not exceed 50 feet and total area between control joints shall not exceed 2,500 square feet.
C. Light Reflectance (LR): not less than .86
D. Noise Reduction Coefficient (NRC): not less than .75
E. Suspension system: Size for five times the design load indicated in ASTM C635/C 635M, Table 1, "Direct Hung". Provide seismic stabilizer bars, seismic compression struts, and seismic clips (BERC2 retaining clip).

2.1 PRODUCT
A. Basis of Design:
1. Suspended: ACT -1 Ceiling Panel, Armstrong Ultima Square Lay In # 1913.
A. NRC: 0.75 & CAC 35
B. Finish: Fine Texture
C. Size: 24 inces by 24 inches by 3/4 inches
D. Color: White
E. Suspension System: Prelude XL 5/16" White
2. Direct Applied: ACT-2 Ceiling Panel, Armstrong Lyra PB Direct Appliey
A. NRC: 0.80
B. Finish: Acoustically transparent membrane with factory-applied latex paint
C. Size: 14 inches by 24 inches by 1 inches
D. Color: White
E. Direct Applied to 1/2" furing strips per manufacuteres recommendations

3.1 EXECUTION
A. Do not install ceiling materials until spaces are enclosed and weather-tight, wet-work in spaces is complete and dry, work above ceilings is complete, and ambient temperature and humidity conditions are maintained at the levels indicated for project when occupied for it's intended use.
B. Store ceiling products in fully enclosed, conditioned space where they will be protected from moisture, humidity, temperature extremes, direct sunlight, surface contaminates, and other causes.
C. Per manufacturer's instructions, allow ceiling material to acclimate to environmental conditions prior to installation.
D. Space hangers not more than 48-inches on center along each member supported directly from hangers. Provide hangers not more than 8-inches from ends of each member.
E. Erection tolerances: Install main and cross runners level to a tolerance of 1/8-inch in 12-feet, non-cumulative.

09 65 13 RESILIENT BASE AND ACCESSORIES

1.1 SUMMARY
A. Thermoset rubber base
B. Rubber transition accessories

2.1 PRODUCTS
A. Thermoset Rubber Base: ASTM F 1861, Type FS, Group 1 (solid homogeneous), .125-inch thickness, see finish schedule for height and color.
B. Style and Location:
1. Style A, Straight: Provide in areas with carpet.
2. Style B, Cove: Provide in areas with resilient floor coverings.
C. Outside Corners: Preformed. Inside corners job formed.

3.1 EXECUTION
A. Do not install resilient products until materials are the same temperature as space where they are to be installed.
B. Apply resilient base to walls, columns, pilasters, casework and cabinets in toe spaces and other permanent fixtures.
C. Install preformed corners before installing straight pieces.
D. On masonry surfaces or other similar irregular substrates, fill voids along top edge of resilient base with manufacturers recommended adhesive filler.

09 65 16 RESILIENT FLOORING

1.1 SUMMARY
A. Luxury Vinyl Tile

1.2 PERFORMANCE REQUIREMENTS
A. Fire-Test-Response Characteristics: according to ASTM E 648 or NFPA 253: Critical Radiant Flux Classification: Class I.

2.1 PRODUCTS
A. Luxury Vinyl Tile: Mannington Flooring. See Finish Schedule for color and pattern
1. Type II, minimum binder content of 34 percent, Grade I
2. Wear-Layer Thickness: .050-inches
3. Backing: Class A, see finish schedule for subflooring mat
4. Wearing Surface: Smooth
5. Installation Method: Seamless, heat welded

3.1 EXECUTION
A. Do not install resilient sheet flooring until it is the same temperature as the space where it is to be installed. At least 48 hours in advance of installation, move flooring and installation material to the spaces where they will be installed.
B. Extend resilient flooring into toe spaces, door reveals, closets and similar openings,
C. Adhere resilient flooring to substrates using a full spread of adhesive applied to substrate to produce a completed installation without open cracks, voids, raising, and puckering at joints, telegraphing of adhesive spreader marker, and other surface imperfections.
D. Remove adhesive and other blemishes from exposed surfaces and cover floor finish until substantial completion.

09 68 13 TILE CARPETING

1.1 SUMMARY
A. Carpet Tile

1.2 PERFORMANCE REQUIREMENTS
A. Appearance Retention Rating: Heavy traffic, 3.0 min. per ASTM D 7330
B. Critical Radiant Flux Classification: not less than 0.22 W/sq. cm per NFPA 253
C. Applied treatments: Soil-resistance treatment Protek2.

1.3 EXTRA MATERIALS
A. Furnish one box of every color and type of carpet tile installed, from the same product run, that match products installed and that are packaged with protective covering for storage.

1.4 FIELD CONDITIONS
A. Do not deliver or install carpet tiles until spaces are enclosed and weathertight, wet-work in spaces is complete and dry, and ambient temperature and humidity conditions are maintained at levels planned for building occupants during the remainder of the construction period.
B. Do not install carpet tiles over concrete slabs until slabs have cured and are sufficiently dry to bond with adhesive and concrete slabs have pH range recommended by carpet tile manufacturer.

1.5 WARRANTY
A. Manufacturer agrees to repair or replace components of carpet tile installation that fail in materials or workmanship within specified warranty period. Warranty does not include deterioration or failure of carpet tile due to unusual traffic, failure of substrate, vandalism, or abuse. Failures include:
1. More than 10 percent edge raveling, snags, and runs.
2. Dimensional instability.
3. Excess static discharge.
4. Loss of tuft-bind strength.
5. Loss of face fiber.
6. Delamination.
B. Warranty Period: 10 years from Substantial Completion.

2.1 PRODUCTS
A. Tile Carpeting: See Finish Schedule for color and pattern

3.1 EXECUTION
A. Use trowelable leveling and patching compounds, according to manufacturer's written instructions, to fill cracks, holes, and depressions in substrates 1/8-inch wide or wider and protrusions more than 1/32-inch.
B. At doorways, center seams under the door in the closed position.
C. Extend carpet into toe spaces, door reveals, closets, open-bottomed obstructions, removable flanges, alcoves, and similar openings.

09 91 00 PAINTING

1.1 SUMMARY
A. Interior painting
B. Exterior painting

1.2 REGULATORY AGENCY REQUIREMENTS
A. Removal of any Lead-base Paint Products (exceeding 20 ft of exterior surface or 6 sq ft of interior surface) must be performed by Workers who have been pre-certified by EPA.
B. Existing structure is older than 1978, therefore, comply with Federal Dust Removal Law requirements including the following:
1. Provide HEPA Filter equipped vacuums and other necessary dust-removal tools

1.3 SITE CONDITIONS
A. Perform work only under the following conditions, unless otherwise instructed by Manufacturer:
1. Maximum relative humidity: 85%
2. Ambient air temperatures are between 50 degrees and 95 degrees F.
B. Maximum moisture content of substrates, when measured with an electronic moisture meter:
1. Concrete: 12%
2. Masonry (clay and CMU): 12%
3. Wood: 15%
4. Portland cement plaster: 12%
5. Gypsum board: 12%

2.1 EXTERIOR PAINTING SCHEDULE
A. Basis of Design is Sherwin Williams, see Finish Schedule for colors.
B. Metal
1. Primer: Pro-Industrial Pro-Cryl Universal Primer
2. (2) Top coats: Pro Industrial Water Based Acrolon 100 Urethane
C. Wood
1. Primer: Exterior Latex Wood Primer
2. (2) Top coats: A-100 Exterior Latex Satin

2.2 INTERIOR PAINTING SCHEDULE
A. Basis of Design is Sherwin Williams, see Finish Schedule for colors. Provide appropriate primer for each substrate per manufacturer.
B. Walls:
1. Walls: (2) Top coats - Pro Industrial Pre-Catalyzed Waterbased Epoxy Semi-Gloss
C. Ceilings:
1. (2) Top coats - Pro Industrial Waterborne Acoustic Dryfall
D. Door Frames, Window Frames, Trim:
1. (2) Top coats - Pro Industrial Acrylic Semi-Gloss

3.1 SURFACE PREPARATION
A. Aluminum: Remove all oil, grease, dirt, oxide and other foreign material by cleaning per SSPC-SP1 Solvent Cleaning.
B. CMU AND Concrete: Remove all loose mortar and foreign material, fill bug holes, air pockets, and other voids with a cement patching compound. Concrete and mortar must be cured at least 30 days.
C. Cement siding/panels: Wash surface with appropriate cleaner, rinse thoroughly and allow to dry. Existing peeled or checked paint should be scraped and sanded to a sound surface.
D. Interior drywall: All screw/nail heads must be set and spackled, joints taped and mudded, sanded smooth, and all dust removed from surface.
E. Galvanized metal: Clean per SSP-SP1 using detergent or a degreasing cleaner to remove greases and oils.
F. Plaster: Damaged areas must be repaired with an appropriate patching material. Bare plaster must be cured and hard. Textured, soft, porous, or powdery plaster should be treated with a solution of 1 pint household vinegar to 1 gallon of water. Repeat until surface is hard, rinse with clear water, and allow to dry.
G. Steel: Remove all loose mill scale, loose rust, and other foreign material. Clean with solvent per SSPC-SP1, removing all visible oil, grease, soil, drawing and cutting compounds. Change rags and cleaning solution frequently.
H. Wood: knots, pitch streaks must be scraped, sanded, and spot primed before full priming coat is applied. Patch all nail holes with wood filler or putty and sand smooth.
I. Mildew: Remove any mildew by scrubbing with trisodium phosphate solution, treat with bleach solution, rinse with clean water, and allow surfaces to complete dry.

10 02 60 WALL AND CORNER GUARDS

PART 1 - GENERAL

1.01 SUMMARY
A. Provide wall and door protection systems.

1.02 SUBMITTALS
A. Product Data: Submit manufacturer's product data and installation instructions for each material and product used.
B. Samples: Submit two representative samples of each material specified indicating visual characteristics and finish. Include range samples if variation of finish is anticipated.

1.03 QUALITY ASSURANCE
A. Comply with governing codes and regulations. Provide products of acceptable manufacturers which have been in satisfactory use in similar service for three years. Use experienced installers. Deliver, handle, and store materials in accordance with manufacturer's instructions.
B. Performance: Fire performance meeting code requirements.

PART 2 - PRODUCTS

2.01 MATERIALS
A. Manufacturers: Arden Architectural Specialties, Balco/Metalines, Construction Specialties, IPC Door and Wall Protection Systems, Tepromark International, or approved equal.
B. Corner Guards:
1. Stainless steel corner guards, surface mounted.

PART 3 - EXECUTION

3.01 INSTALLATION
A. Install materials in accordance with manufacturer's instructions and approved submittals. Install materials in proper relation with adjacent construction and with uniform appearance. Coordinate with work of other sections.
B. Restore damaged finishes. Clean and protect work from damage.

10 04 40 INTERIOR SIGNAGE

PART 1 - GENERAL

1.01 SUMMARY
A. Provide interior signage

1.02 SUBMITTALS
A. Product Data: Submit manufacturer's product data and installation instructions for each material and product used.
B. Samples: Submit two representative samples of each material specified indicating visual characteristics and finish. Include range samples if variation of finish is anticipated.

1.03 QUALITY ASSURANCE
A. Comply with governing codes and regulations. Provide products of acceptable manufacturers which have been in satisfactory use in similar service for three years. Use experienced installers. Deliver, handle, and store materials in accordance with manufacturer's instructions.

PART 2 - PRODUCTS

2.01 MATERIALS
A. Manufacturers: Andco Industries Corp., ASI Sign Systems, The Supersine Co., Vomar Products, or approved equal.
B. Panel Signs:
1. Type: Unframed.
2. Material: Plastic.
3. Copy: Raised lettering.
C. Dimensional Letters and Numbers:
1. Type: Cut-out of solid stock.
2. Material: Aluminum, anodized finish.
D. Sign Schedule:
a. Room sign: doors to receive room number and name per door schedule on A0.2.
b. Stair/Exit signage: Provide signage indicating 'AREA OF REFUGE' on door 201A. Provide signage indicating directions of use for two-way communications system at area of refuge.

PART 3 - EXECUTION

3.01 INSTALLATION
A. Install materials and systems in accordance with manufacturer's instructions and approved submittals. Install materials and systems in proper relation with adjacent construction and with uniform appearance. Coordinate with work of other sections.
B. Restore damaged finishes. Clean and protect work from damage.

10 05 23 FIRE EXTINGUISHERS AND CABINETS

PART 1 - GENERAL

1.01 SUMMARY
A. Provide fire extinguishers and cabinets.

1.02 SUBMITTALS
A. Product Data: Submit manufacturer's product data and installation instructions for each material and product used.
B. Shop Drawings: Submit shop drawings indicating material characteristics, details of construction, connections, and relationship with adjacent construction.

1.03 QUALITY ASSURANCE
A. Comply with governing codes and regulations. Provide products of acceptable manufacturers which have been in satisfactory use in similar service for three years. Use experienced installers. Deliver, handle, and store materials in accordance with manufacturer's instructions.
B. Standards: UL and FM listed products, NFPA 10.
C. Regulations: ADAAG.

PART 2 - PRODUCTS

2.01 MATERIALS
A. Manufactures: J. L. Industries, Larsen's Manufacturing, Potter-Roemer, or approved equal.
B. Fire Extinguishers:
1. Type: Multipurpose dry chemical type.
2. Rating: Sized for project requirements.
3. Public Area Mounting: Cabinet mounted.
4. Service Area Mounting: Metal brackets.
C. Cabinets:
1. Mounting: Semi-recessed.
2. Trim: Exposed.
3. Doors: Enameled steel, baked enamel finish.
4. Door Style: Duo-panel.

PART 3 - EXECUTION

3.01 INSTALLATION
A. Install materials and systems in accordance with manufacturer's instructions and approved submittals. Install materials and systems in proper relation with adjacent construction and with uniform appearance. Coordinate with work of other sections.
B. Install fire extinguishers in mechanical and service areas with wall-hung brackets at locations and heights indicated and acceptable to authorities having jurisdiction.
C. Install fire extinguishers in cabinets in public areas plumb and level at heights acceptable to authorities having jurisdiction.
D. Restore damaged finishes. Clean and protect work from damage.

ZCS ENGINEERING ARCHITECTURE
127 NW D Street, Grants Pass, Oregon 97526 | 541-479-3865

REEDSPORT FIRE DISTRICT
124 N 4TH ST.
REEDSPORT, OR 97467

REEDSPORT FIRE STATION 7

REGISTERED ARCHITECT
Jacob Zander
OREGON CITY, OR
12412
STATE OF OREGON

△	DATE:	Description

PROJECT NO.	G-1468-21
DRAWN:	MJC,PWR,TBS
CHECKED:	JEZ
DATE:	01-24-23

SPECIFICATIONS

AS.5

95% CONSTRUCTION DOCUMENTS | BID / PERMIT SET

ONE INCH EQUALS FULL SCALE 4/25/2023 2:13:34 PM

PROJECT STRUCTURAL NOTES (DOUGLAS COUNTY, OREGON)

GENERAL INFORMATION:

1. STRUCTURAL DRAWINGS ARE A PORTION OF THE CONTRACT DOCUMENTS AND ARE INTENDED TO BE USED WITH ARCHITECTURAL, MECHANICAL, AND ELECTRICAL DRAWINGS. THE CONTRACTOR IS RESPONSIBLE FOR COORDINATING THE REQUIREMENTS FROM THESE DRAWINGS INTO THEIR SHOP DRAWINGS AND WORK. THESE GENERAL NOTES SUPPLEMENT THE PROJECT SPECIFICATIONS. REFER TO THE PROJECT SPECIFICATIONS FOR ADDITIONAL REQUIREMENTS. NOTES AND DETAILS ON THE STRUCTURAL DRAWINGS SHALL TAKE PRECEDENCE OVER THE GENERAL NOTES AND TYPICAL DETAILS. WHERE NO DETAILS ARE GIVEN, CONSTRUCTION SHALL BE AS SHOWN FOR SIMILAR WORK.
2. THE STRUCTURE IS DESIGNED TO FUNCTION AS A UNIT UPON COMPLETION. THE CONTRACTOR IS RESPONSIBLE FOR FURNISHING ALL TEMPORARY BRACING AND/OR SUPPORT THAT MAY BE REQUIRED AS THE RESULT OF THE CONTRACTOR'S CONSTRUCTION METHODS AND/OR SEQUENCES.
3. ALL EXISTING CONDITIONS, DIMENSIONS AND ELEVATIONS SHALL BE FIELD VERIFIED. THE CONTRACTOR SHALL NOTIFY THE ARCHITECT OF ANY SIGNIFICANT DISCREPANCIES FROM CONDITIONS SHOWN ON THE DRAWINGS.
4. THE GENERAL CONTRACTOR SHALL BE RESPONSIBLE FOR ALL CONSTRUCTION MEANS AND METHODS. RESPONSIBILITY SHALL INCLUDE BUT NOT LIMITED TO DEMOLITION AND CONSTRUCTION MEANS AND METHODS, TECHNIQUES, SEQUENCING, AND SAFETY REQUIRED TO COMPLETE CONSTRUCTION.
5. UNLESS OTHERWISE NOTED, MATERIAL AND DESIGN SPECIFICATIONS CITED HEREIN SHALL BE THOSE CONFORMING WITH THE VERSION OF THE APPLICABLE SPECIFICATIONS OR CODE MOST RECENTLY ADOPTED BY THE PERMITTING AUTHORITY. THESE STRUCTURAL NOTES ARE TO BE USED AS A SUPPLEMENT TO THE SPECIFICATIONS.
6. THIS STRUCTURE AND ALL OF ITS PARTS MUST BE ADEQUATELY BRACED AGAINST WIND, LATERAL EARTH AND SEISMIC FORCES UNTIL THE PERMANENT LATERAL-FORCE RESISTING SYSTEMS HAVE BEEN CONSTRUCTED AND ALL ATTACHMENTS AND CONNECTIONS NECESSARY FOR THE STABILITY OF THE STRUCTURE AND ITS PARTS HAVE BEEN MADE.
7. ALL FEATURES OF CONSTRUCTION NOT FULLY SHOWN SHALL BE OF THE SAME TYPE AND CHARACTER AS SHOWN FOR SIMILAR CONDITIONS, SUBJECT TO REVIEW BY THE ARCHITECT AND STRUCTURAL ENGINEER OF RECORD.
8. ALL PRODUCTS AND MATERIALS USED BY THE CONTRACTOR SHALL BE APPLIED, PLACED, ERECTED OR INSTALLED IN STRICT ACCORDANCE WITH THE MANUFACTURER'S INSTRUCTIONS.

CODE REQUIREMENT:

1. CONFORM TO THE 2019 OREGON STRUCTURAL SPECIALTY CODE, BASED ON THE 2018 INTERNATIONAL BUILDING CODE (IBC) AND ASCE 41-17. NOTE: THIS APPLIES TO ALL REFERENCES TO OSSC.

DESIGN CRITERIA:

1. DESIGN IS BASED ON THE STRENGTH AND DEFLECTION CRITERIA OF THE OSSC. IN ADDITION TO THE DEAD LOADS, THE FOLLOWING LOADING AND ALLOWABLE LOAD IS USED FOR DESIGN:

A.	LIVE LOADS:	
	SLAB ON GRADE	250 PSF
	OFFICE SPACE	50 PSF
	PUBLIC AREA	100 PSF
B.	GROUND SNOW LOAD:	25 PSF
	EXPOSURE FACTOR	1.0
	SNOW IMPORTANCE FACTOR	1.0
	THERMAL FACTOR	1.0
	FLAT ROOF SNOW LOAD	25 PSF
C.	WIND LOAD:	
	BASIC WIND SPEED (3-SECOND GUST)	130 MPH
	WIND EXPOSURE	B
	BUILDING CATEGORY	IV
	INTERNAL PRESSURE COEFFICIENT	0.18
	TOPOGRAPHIC FACTOR	1.13
D.	EARTHQUAKE DESIGN DATA:	
	RISK CATEGORY	IV
	BSE-1E (IMMEDIATE OCCUPANCY)	
	S_S	0.16
	S_1	0.07
	S_{XS}	0.37
	S_{X1}	0.30
	BASE-2E (LIFE SAFETY)	
	S_S	0.93
	S_1	0.49
	S_{XS}	1.21
	S_{X1}	2.07
	SITE CLASS	D
	SEISMIC DESIGN CATEGORY	D
	ANALYSIS PROCEDURE	LINEAR STATIC PROCEDURE
	C2C2	1.4
	CM	1.0

SPECIAL INSPECTION:

1. SPECIAL INSPECTIONS WILL BE PROVIDED BY THE OWNER BASED ON THE REQUIREMENTS OF THE OSSC AS SUMMARIZED IN THE ZCS ENGINEERING SPECIAL INSPECTION CHECKLIST DATED 1/24/2023. CONTRACTOR SHALL PROVIDE SUFFICIENT NOTICE AND ACCESS FOR THE SPECIAL INSPECTOR TO PERFORM THESE INSPECTIONS.

STRUCTURAL OBSERVATION:

1. THE STRUCTURAL ENGINEER OF RECORD (SER) WILL PERFORM STRUCTURAL OBSERVATION BASED ON THE REQUIREMENTS OF THE OSSC. THE STAGES OF CONSTRUCTION LISTED BELOW. CONTRACTOR SHALL PROVIDE SUFFICIENT NOTICE AND ACCESS FOR THE SER TO PERFORM THESE OBSERVATIONS.

STRUCTURAL OBSERVATION PROGRAM			
ITEM	OBSERVED BY (2)		COMMENTS
	AOR	SER	
PRIOR TO FIRST CONCRETE POUR		X	REF. NOTES A, C, D, E
DURING INITIAL STEEL ERECTION		X	REF. NOTES A, C, D
AS REQUIRED TO ADDRESS STRUCTURAL ISSUES		X	REF. NOTES A, C, D

2. PROGRAM FOOTNOTES:
   - A. CONTRACTOR IS RESPONSIBLE FOR NOTIFYING THE SER IN ADVANCE.
   - B. SER - STRUCTURAL ENGINEER OF RECORD / AOR - ARCHITECT OF RECORD
   - C. A FIELD REPORT WILL BE SUBMITTED TO THE BUILDING DEPARTMENT FOLLOWING EACH SITE VISIT.
   - D. STRUCTURAL OBSERVATION IS FOR THE GENERAL CONFORMANCE OF THE STRUCTURAL DRAWING, SPECIAL INSPECTION IS STILL REQUIRED.
   - E. AFTER REINFORCING STEEL HAS BEEN INSTALLED.

SUBMITTALS:

1. SHOP DRAWINGS SHALL BE SUBMITTED TO THE ARCHITECT PRIOR TO FABRICATION AND CONSTRUCTION REGARDING ALL STRUCTURAL ITEMS, INCLUDING THE FOLLOWING:
   - A. CONCRETE MIX DESIGNS, CONCRETE REINFORCEMENT (INCLUDING MILL TEST REPORTS), STRUCTURAL STEEL (INCLUDING MILL TEST REPORTS)
   - B. ANY CHANGES TO THE STRUCTURAL DRAWINGS SHALL BE SUBMITTED TO THE ARCHITECT AND ARE SUBJECT TO REVIEW AND ACCEPTANCE OF THE STRUCTURAL ENGINEER OF RECORD.
   - C. DESIGN DRAWINGS, SHOP DRAWINGS, AND CALCULATIONS FOR THE DESIGN AND FABRICATION OF ITEMS THAT ARE DESIGNED BY OTHERS, INCLUDING: PRE-MANUFACTURED STEEL STAIRS. SYSTEMS SHALL BEAR THE SEAL AND SIGNATURE OF A PROFESSIONAL ENGINEER REGISTERED IN THE STATE OF OREGON, AND SHALL BE INCLUDED FOR CONNECTIONS TO THE STRUCTURE, CONSIDERING LOCALIZED EFFECTS ON STRUCTURAL ELEMENTS INDUCED BY THE CONNECTION LOADS. DESIGN SHALL BE BASED ON THE REQUIREMENTS OF THE OSSC WITH THE FOLLOWING:
     - EARTHQUAKE AND WIND LOADS AS NOTED IN DESIGN CRITERIA.
   - D. THE CONTRACTOR SHALL COORDINATE SEISMIC RESTRAINTS OF MECHANICAL, PLUMBING, AND ELECTRICAL EQUIPMENT, MACHINERY, AND ASSOCIATED PIPING WITH THE STRUCTURE. ANY CONNECTIONS TO THE STRUCTURE SHALL CONFORM TO OSSC AND SHALL BE SUBMITTED TO THE ARCHITECT PRIOR TO FABRICATION.

DIVISION 03 - CONCRETE

CONCRETE:

1. CONCRETE WORK SHALL CONFORM TO CHAPTER 19 OF THE OSSC. CONCRETE STRENGTHS SHALL BE VERIFIED BY STANDARD 28 DAY CYLINDER TESTS PER ASTM C39, AND SHALL BE AS FOLLOWS:

ABSOLUTE WATER-CEMENT RATIO BY WEIGHT			
f'c (PSI)	NON AIR-ENTRAINED	AIR-ENTRAINED	USE
4,000	0.50	N/A	INTERIOR SLABS ON GRADE
4,000	0.45	N/A	STEM WALL AND FOOTINGS

2. VERIFY WATER/CEMENT RATIO WITH FLOOR COVERING MANUFACTURER FOR CONCRETE FLOORS WITH MOISTURE SENSITIVE FLOOR COVERINGS, AND VERIFY COORDINATE WITH PROJECT SPECIFICATIONS.
3. MINIMUM CEMENT CONTENT PER CUBIC YARD SHALL BE AS FOLLOWS:
   - f'c=4,000 psi: 550 lbs.
4. FLY ASH CONFORMING TO ASTM C618 (INCLUDING TABLE 2A) TYPE F, MAY BE USED TO REPLACE UP TO 20% OF THE CEMENT CONTENT, PROVIDED THAT THE MIX STRENGTH IS SUBSTANTIATED BY TEST DATA.
5. THE CONTRACTOR SHALL SUBMIT CONCRETE MIX DESIGNS, ALONG WITH TEST DATA COMPLIANT WITH OSSC SECTION 1905, A MINIMUM OF TWO WEEKS PRIOR TO PLACING CONCRETE. NO WATER MAY BE ADDED TO CONCRETE IN THE FIELD UNLESS SPECIFICALLY APPROVED IN WRITING BY THE CONCRETE SUPPLIER IN CONJUNCTION WITH THE CONCRETE MIX DESIGN.
6. A WATER-REDUCING ADMIXTURE CONFORMING TO ASTM C494, USED IN STRICT ACCORDANCE WITH THE MANUFACTURER'S RECOMMENDATIONS, SHALL BE INCORPORATED IN CONCRETE DESIGN MIXES. A HIGH-RANGE WATER-REDUCING (HRWR) ADMIXTURE CONFORMING TO ASTM C494, TYPE F OR G, MAY BE USED IN CONCRETE MIXES PROVIDING THAT THE SLUMP DOES NOT EXCEED 8". AN AIR-ENTRAINING AGENT CONFORMING TO ASTM C260 SHALL BE USED IN CONCRETE MIXES FOR EXTERIOR HORIZONTAL SURFACES EXPOSED TO WEATHER. THE AMOUNT OF ENTRAINED AIR SHALL BE 5% +/- 1% BY VOLUME.

CONCRETE CAST IN PLACE:

1. CONCRETE SHALL HAVE A MAXIMUM SLUMP OF 4" WITHOUT THE USE OF ADMIXTURES AS NOTED.
2. A MINIMUM OF THREE (3) CONCRETE TEST CYLINDERS SHALL BE PROVIDED FOR EACH ONE HUNDRED (100) CU. YARDS, OR EACH DAY OF POUR, FOR EACH CONCRETE STRENGTH. CYLINDERS SHALL BE TESTED AS FOLLOWS:
   - A. ONE (1) AT SEVEN (7) DAYS, AND
   - B. TWO (2) AT TWENTY-EIGHT (28) DAYS
3. CONCRETE CYLINDER SAMPLING AND TESTING SHALL CONFORM WITH ASTM SPECIFICATIONS. ACCEPTANCE OF CONCRETE SHALL BE GOVERNED BY THE PROVISIONS OF ACI 318 "BUILDING CODE REQUIREMENTS FOR REINFORCED CONCRETE". TWO (2) SETS OF MIX DESIGNS, WITH COMPLETE STATISTICAL BACKUP, SHALL BE SUBMITTED FOR REVIEW.
4. CONCRETE MATERIALS, FORM WORK, MIXING, PLACING AND CURING SHALL CONFORM WITH THE SPECIFICATIONS CONTAINED IN THE ACI "MANUAL OF CONCRETE PRACTICE".
5. AT AREAS OF DEPRESSIONS FOR SLABS AND BEAMS, PROVIDE MINIMUM THICKNESS OF DEPTH AS FOR ADJACENT AREAS, UNLESS NOTED OTHERWISE.
6. CONCRETE SLABS SHALL BE INSTALLED WITH CONSTRUCTION JOINTS NOT SPACED FARTHER THAN 12'-6" APART AND SHALL BE DIVIDED INTO APPROXIMATELY SQUARE PANELS. PANEL DIMENSION RATIOS SHALL NOT EXCEED 1.5:1.
7. **ALL SAW CUT CONTROL JOINTS SHALL BE CUT WITHIN 4 TO 12 HOURS AFTER CONCRETE PLACEMENT. SAW CUT SHALL BE 1.5" DEEP.**
8. CONCRETE SHALL NOT BE PLACED ON FROZEN GROUND.
9. BOND NEW CONCRETE TO EXISTING CONCRETE WITH "WELD-CRETE", AS MANUFACTURED BY LARSON PRODUCTS CORPORATION, OR APPROVED. AS A MINIMUM, EXISTING CONCRETE SURFACES SHALL BE ROUGHENED BY CHIPPING TO A MINIMUM 1/4" AMPLITUDE TO EXPOSE COARSE AGGREGATE. PREPARATION AND APPLICATION IS TO BE IN STRICT ACCORDANCE WITH THE MANUFACTURER'S RECOMMENDATIONS.
10. ALL EXPOSED CORNERS SHALL HAVE 3/4" CHAMFER, UNLESS NOTES OTHERWISE.

CONCRETE REINFORCING STEEL:

1. REINFORCING STEEL SHALL CONFORM TO ASTM A615, GRADE 60. FOR DEFORMED BARS AND ASTM A185 FOR SMOOTH WELDED WIRE FABRIC (WWF), UNLESS OTHERWISE NOTED. REINFORCING STEEL TO BE WELDED SHALL CONFORM TO ASTM A706. REINFORCING STEEL SHALL BE SECURELY TIED IN PLACE WITH #16 ANNEALED IRON WIRE.
2. BARS IN SLABS SHALL BE SUPPORTED ON WELL CURED CONCRETE BLOCKS OR APPROVED METAL CHAIRS, AS SPECIFIED BY THE CRSI MANUAL OF STRANDED PRACTICE, MSP-1. REINFORCING STEEL SHALL BE DETAINED IN ACCORDANCE WITH THE "ACI MANUAL OF STANDARD PRACTICE, MSP-1 REINFORCING STEEL SHALL BE DETAILED IN ACCORDANCE WITH THE "ACI MANUAL OF STANDARD PRACTICE FOR DETAILING REINFORCED CONCRETE STRUCTURES", ACI 315. LAP ALL REINFORCING BARS PER THE TYPICAL LAP SPLICE LENGTH SCHEDULE, EXCEPT AS NOTED. MECHANICAL SPLICES NOTED ON THE PLANS SHALL BE DAYTON BAR-GRIP SPLICES OR APPROVED WITH A CURRENT ICC APPROVAL REPORT.

TYPICAL LAP SPLICE LENGTH SCHEDULE								
BAR SIZE	3,000 psi		4,000 psi		5,000 psi		6,000 psi	
	CASE 1	CASE 2	CASE 1	CASE 2	CASE 1	CASE 2	CASE 1	CASE 2
#3	22	32	19	28	17	25	16	23
#4	29	43	25	37	22	33	20	31
#5	36	54	31	47	28	42	25	38
#6	43	64	37	56	33	50	31	46
#7	63	94	54	81	49	73	44	66
#8	72	107	62	93	55	83	51	76
#9	81	121	70	105	63	94	57	85
#10	91	136	79	118	70	105	64	96
#11	101	151	87	131	78	117	71	107

NOTES:
- A. DIMENSIONS ARE IN INCHES.
- B. CASES 1 AND 2 ARE DEFINED AS FOLLOWS: (db = BAR DIAMETER)
  - a. BEAMS OR COLUMNS:
    - CASE 1: COVER ≥ db AND c-c SPACING ≥ 2db
    - CASE 2: COVER < db OR c-c SPACING < 2db
  - b. ALL OTHERS:
    - CASE 1: COVER ≥ db AND c-c SPACING ≥ 3db
    - CASE 2: COVER < db OR c-c SPACING < 3db
- C. FOR TOP BARS, MULTIPLY LAP LENGTH ABOVE BY 1.3. TOP BARS ARE HORIZONTAL BARS WITH MORE THAN 12" OF CONCRETE CAST BELOW THE BARS.

3. REINFORCEMENT SHALL BE SECURED IN FORMS WITH TIES AND ANCHORAGE TO PREVENT DISPLACEMENT. ALL TIE WIRE SHALL BE MIN. #16 ANNEALED STEEL.
4. ALL REINFORCING STEEL SHALL BE TIED 100% ALONG ALL PERIMETER EDGES AND 50%FIELD.
5. REINFORCING (MINIMUM UNLESS NOTED OTHERWISE ON PLANS)
   - A. PLACE TWO (2) NO. 4 CONTINUOUS AT BOTTOM, TOP AND AT DISCONTINUOUS ENDS OF ALL FOUNDATIONS.
   - B. PLACE 2'-0" x 1'-0" BARS AT CORNERS AND INTERSECTIONS FOR WALLS AND FOUNDATIONS EQUAL IN SIZE AND NUMBER TO HORIZONTAL REINFORCING.
   - C. PLACE TWO (2) NO. 4x OPENING DIMENSIONS PLUS 4'-0" EACH SIDE OF ALL OPENINGS AND TWO (2) NO. 4x4'-0" DIAGONAL BARS AT EACH CORNER OF ALL SLAB OPENINGS GREATER THAN 1'-6" IN DIMENSION.
6. ALL WELDED WIRE FABRIC SHALL CONFORM WITH ASTM A 185. ALL WIRE FABRIC SHALL BE SUPPLIED, LAID IN FLAT SHEETS AND CHAIRED TO PROPER POSITION IN SLABS. LAP ONE (1) FULL MESH PLUS 2" ON SIDES AND ENDS.
7. ALL REINFORCING STEEL SHALL BE DETAILED, FABRICATED AND PLACED IN ACCORDANCE WITH ACI DETAILING MANUAL 315.
   - A. ALL REINFORCING STEEL SHALL BE ACCURATELY AND SECURELY PLACED.
   - B. REINFORCING SHALL NOT BE BENT OR DISPLACED FOR THE CONVENIENCE OF OTHER TRADES, UNLESS APPROVED BY THE STRUCTURAL ENGINEER.
   - C. SPLAY REINFORCING STEEL AROUND OPENINGS WITH 1" IN 10" SPLAY, UNLESS NOTED OTHERWISE.
   - D. MINIMUM COVER FROM CONCRETE SURFACES TO REINFORCING STEEL SHALL BE:
     - 3" TO BOTTOM OF FOOTING
     - 2" TO EARTH FACE OF WALL
     - 3/4" TO INSIDE FACE OF WALL
     - 1-1/2" TO MAIN STEEL BEAMS AND COLUMNS
     - 3/4" SLAB TO TOP AND BOTTOM SURFACES, CENTER OF SLAB ON GRADE
8. REINFORCEMENT BARS SHALL NOT BE TACK WELDED, WELDED, HEATED OR CUT, UNLESS INDICATED ON THE CONTRACT DOCUMENTS OR APPROVED BY THE STRUCTURAL ENGINEER OF RECORD.
9. REINFORCEMENT COUPLERS SHALL BE LENTON, FOX-HOWLETT OR APPROVED, CAPABLE OF DEVELOPING ONE HUNDRED TWENTY-FIVE PERCENT (125%) OF THE SPECIFIED YIELD STRENGTH OF THE REINFORCEMENT.

CONCRETE ACCESSORIES:

1. EXPANSION BOLTS SHALL BE HILTI KWIK TZ, SIMPSON STRONG BOLT, DEWALT POWER-STUD+SD2, OR APPROVED WITH EQUIVALENT ICC ALLOWABLE TENSION AND SHEAR VALUES. EXPANSION BOLTS SHALL BE INSTALLED IN STRICT CONFORMANCE WITH MANUFACTURER'S RECOMMENDATIONS. DO NOT CUT REINFORCING IN NEW OR EXISTING CONCRETE DURING INSTALLATION.
2. EPOXY ADHESIVE SHALL BE HILTI HIT-RE 500 V3, SIMPSON SET-XP, DEWALT PURE110+ EPOXY, DEWALT AC200+ ACRYLIC, OR APPROVED WITH EQUIVALENT ICC ALLOWABLE TENSION AND SHEAR VALUES. EPOXY ANCHORS SHALL BE INSTALLED IN STRICT CONFORMANCE WITH MANUFACTURER'S RECOMMENDATIONS. DO NOT CUT REINFORCING IN NEW OR EXISTING CONCRETE DURING INSTALLATION.
3. PERMANENTLY EXPOSED EMBEDDED PLATES AND ANGLES SHALL BE HOT-DIPPED, GALVANIZED AFTER FABRICATION, UNLESS OTHERWISE NOTED. NO LOADS OR WELDS SHALL BE PLACED ON EMBEDDED PLATES OR ANGLES FOR A MINIMUM OF 7 DAYS AFTER CASTING.
4. ADHESIVE ANCHORS INSTALLED IN HORIZONTALLY OR UPWARDLY INCLINED ORIENTATIONS TO RESIST SUSTAINED TENSION LOADS SHALL BE DONE BY A CERTIFIED ADHESIVE ANCHOR INSTALLER (AAI) AS CERTIFIED THROUGH ACI/CRSI, OR AN APPROVED ALTERNATE WHEN SUBMITTED AND APPROVED BY THE EOR (ACI 318-11 D.9.2.2)/(ACI 318-14 17.8.2.2). PROOF OF CURRENT CERTIFICATION SHALL BE SUBMITTED TO THE ENGINEER FOR APPROVAL PRIOR TO COMMENCEMENT OF INSTALLATION.
5. ADHESIVE ANCHORS MUST BE INSTALLED IN CONCRETE AGED A MINIMUM OF 21 DAYS (ACI 318-11 D.2.2)/(ACI 318-14 17.1.2).

NON-SHRINK GROUT:

1. GROUT SHALL BE NON-SHRINKABLE GROUT CONFORMING WITH ASTM C 1107 AND C.R.D. - 621, CORPS OF ENGINEERS "SPECIFICATIONS FOR NON-SHRINK GROUT". GROUT SHALL HAVE A SPECIFIED COMPRESSIVE STRENGTH AT TWENTY-EIGHT (28) DAYS OF 5000 psi. PRE-GROUTING OF BASE PLATES WILL NOT BE PERMITTED.

DIVISION 05 - METALS

STRUCTURAL STEEL AND MISCELLANEOUS IRON:

STRUCTURAL STEEL SHALL BE:

STRUCTURAL STEEL	
ASTM A992, GRADE 50	WIDE FLANGE SHAPES
ASTM A36	CHANNELS, PLATES, AND ANGLES, U.N.O.
ASTM A500, GRADE B (Fy = 46 KSI)	HOLLOW STRUCTURAL SECTIONS (TUBES)

1. DESIGN, FABRICATION, AND ERECTION SHALL BE IN ACCORDANCE WITH THE "AISC SPECIFICATION FOR THE DESIGN, FABRICATION, AND ERECTION OF STRUCTURAL STEEL FOR BUILDINGS" WITH "COMMENTARY" AND THE "CODE OF STANDARD PRACTICE", WITH EXCEPTIONS NOTED IN SPECIFICATIONS.
2. DRAWINGS ARE DIMENSIONED FOR LAYOUT AND NOT DIMENSIONED PER AISC STANDARDS. IT IS THE RESPONSIBILITY OF THE GENERAL CONTRACTOR TO COORDINATE BETWEEN ALL DRAWINGS AND DEVELOP SHOP DRAWINGS WITH DETAIL AND DIMENSIONING PER AISC.
3. ALL FABRICATION, ERECTION, IDENTIFICATION, AND PAINTING SHALL CONFORM TO AISC SPECIFICATIONS.
4. ALL STEEL EXPOSED TO WEATHER, SOIL, MOISTURE, OR AS DENOTED ON PLANS SHALL BE HOT DIP GALVANIZED PER ASTM A-123, OR OTHER APPROVED PROTECTIVE COATING.
5. ALL WELDING SHALL CONFORM TO AWS (LATES EDITION) SPECIFICATIONS.
   - A. ALL WELDERS TO BE QUALIFIED UNDER AWS SPECIFICATIONS WITHIN THE PAST TWO YEARS FOR THE TYPE OF WELDING PERFORMED.
   - B. ALL WELDS SHALL BE PERFORMED USING PRE-QUALIFIED WELDING PROCEDURES.
   - C. WELDS FILLER METAL SHALL BE AWS A5.1 OR A5.5 E70XX ELECTRODES OR AWS A5.18 ER70S-X.
   - D. AFTER FABRICATION, BUT BEFORE INSTALLATION, REMOVE RUST, SCALE, GREASE, AND OIL BY WIRE BRUSHING AND CHEMICAL TREATMENT.
   - E. WELDING OF REINFORCING STEEL SHALL BE AS SPECIFIED IN THESE STRUCTURAL NOTES UNDER **"CONCRETE REINFORCING STEEL"**.
   - F. WELDS TO METAL DECK, METAL STUDS OR OTHER LIGHT GAUGE METALS SHALL CONFORM WITH AWS D1.3.
6. ALL HIGH-STRENGTH BOLTS, MATERIAL AND INSTALLATION, SHALL CONFORM WITH ASTM STANDARDS.
   - A. BOLTS SHALL CONFORM WITH ASTM A 325, TYPE N, TYPE X, TYPE SC (CLASS A). BOLTS NOT NOTED IN THE DRAWINGS AS TYPE SC SHALL BE TYPE N, TYPE X.
   - B. FRICTION CONNECTIONS SHALL BE FREE OF PAINT AT THE FAYING SURFACES, OR A CLASS A SURFACE SHALL BE PROVIDED.
   - C. FOR BEARING-TYPE CONNECTIONS, TYPE N, TYPE X BOLTS SHALL BE TIGHTENED TO A SNUG TIGHT CONDITION, ONLY.
   - D. ALL HIGH-STRENGTH BOLTS SHALL BE INSTALLED WITH HARDENED WASHERS, CONFORMING WITH ASTM F 436, AND NUTS, CONFORMING WITH ASTM A 563.
   - E. ALL BOLTS REQUIRING GALVANIZATION SHALL BE HOT-DIPPED GALVANIZED IN ACCORDANCE WITH ASTM A 153, CLASS C.
   - F. NO WELDING TO HIGH-STRENGTH BOLTS IS ALLOWED.
7. ALL MEMBERS SHALL BE CONNECTED WITH SEMI-FINISHED MACHINE BOLTS, UNLESS NOTED OTHERWISE ON PLANS. MACHINE BOLTS SHALL CONFORM TO ASTM A 307, GRADE A.
8. STRUCTURAL STEEL AND MISCELLANEOUS IRON:
   - A. EXPANSION ANCHORS SHALL BE I.C.B.O. APPROVED (ZINC PLATED IN ACCORDANCE WITH ASTM B633, HOT-DIPPED GALVANIZED IN ACCORDANCE WITH ASTMA 153, A.I.S.I. 304 STAINLESS STEEL) AND CONFORM WITH FS FF-S-325, GROUP II, TYPE 4, CLASS 1. ACCEPTABLE ANCHORS ARE HILTI "KWIK-BOLT TZ", SIMPSON STRONG BOLT, OR DEWALT POWER STUD+. ANCHORS SHALL BE INSTALLED IN ACCORDANCE WITH THE MANUFACTURER'S RECOMMENDATIONS.
   - B. SLEEVE ANCHORS SHALL BE I.C.B.O. APPROVED (ZINC PLATED IN ACCORDANCE WITH ASTM B 633, A.I.S.I. 304 STAINLESS STEEL) AND CONFORM WITH FS FF-S-325, GROUP II, TYPE 3, CLASS 3. AN ACCEPTABLE ANCHOR IS THE HILTI "SLEEVE" ANCHOR, AS MANUFACTURED BY THE HILTI FASTENING SYSTEMS, INC. ANCHORS SHALL BE INSTALLED IN ACCORDANCE WITH THE MANUFACTURER'S RECOMMENDATIONS.
   - C. FLUSH SHELL ANCHORS SHALL BE I.C.B.O. APPROVED (ZINC PLATED IN ACCORDANCE WITH ASTM B 633, A.I.S.I. 303 STAINLESS STEEL) AND CONFORM WITH FS FF-S-325, GROUP VIII, TYPE 1. AN ACCEPTABLE ANCHOR IS THE HILTI "HDI" ANCHOR, AS MANUFACTURED BY HILTI FASTENING SYSTEMS, INC. ANCHORS SHALL BE INSTALLED IN ACCORDANCE WITH THE MANUFACTURER'S RECOMMENDATIONS.
   - D. ADHESIVE ANCHORS SHALL BE I.C.B.O. APPROVED AND SHALL CONSIST OF ALL-THREAD ANCHOR ROD, NUT, WASHER AND EPOXY INJECTION GEL SYSTEM. ANCHOR RODS SHALL BE MANUFACTURED FROM:
     - a. A-36 MATERIAL (ZINC PLATED IN ACCORDANCE WITH ASTM B 633, HOT-DIPPED GALVANIZED IN ACCORDANCE WITH ASTM A 153).
     - b. ASTM A 193, GRADE B-7 MATERIAL (ZINC PLATED IN ACCORDANCE WITH ASTM B 633, HOT-DIPPED GALVANIZED IN ACCORDANCE WITH ASTM A 153).
     - c. A.I.S.I. 304 OR 316 STAINLESS STEEL, IN ACCORDANCE WITH ASTM F 593. ANCHOR RODS SHALL HAVE ROLLED THREADS. NUTS SHALL CONFORM WITH ASTM A 194. ACCEPTABLE ADHESIVE INJECTION GEL SYSTEMS ARE THE HILTI HIT-RE 500 V3, SIMPSON SET XP OR DEWALT 1000+. ANCHORS SHALL BE INSTALLED IN ACCORDANCE WITH THE MANUFACTURER'S RECOMMENDATIONS.
9. ANCHOR BOLT SHALL CONFORM WITH ASTM A 307, GRADE A, AND SHALL BE PROVIDED WITH STANDARD WASHERS AND NUTS. GALVANIZE EXTERIOR BOLTS. GALVANIZING SHALL BE IN ACCORDANCE WITH ASTM A 153, CLASS C. NUTS SHALL BE OVER-TAPPED TO CLASS 2A FIT BEFORE GALVANIZING, IN ACCORDANCE WITH ASTM A 563.
10. ERECTION AIDS (SUCH AS BOLTS, CLIPS, SHIMS, SEATS OR ANY OTHERS REQUIRED TO FACILITATE CONSTRUCTION) ARE THE RESPONSIBILITY OF THE CONTRACTOR TO DESIGN AND PROVIDE.
11. ALL BRACING SHALL HAVE TWO (2) BOLT CONNECTIONS, UNLESS NOTED OTHERWISE. ALL CROSS BRACING SHALL BE BOLTED AT INTERSECTIONS WITH TWO (2) BOLT MINIMUM FOR ST AND ONE (1) BOLT FOR ANGLES. PROVIDE FILLER PLATE BETWEEN CROSS BRACES, AS REQUIRED.
12. ALL FIELD WELDS TO GALVANIZED STEEL AND AREAS DAMAGED BY WELDING, FLAME CUTTING OR HANDLING, SHALL BE REPAIRED WITH AN ORGANIC COLD GALVANIZING COMPOUND HAVING A MINIMUM OF NINETY-FOUR PERCENT (94%) ZINC DUST IN THE DRY FILM. APPLY IN MULTIPLE COATS, UNTIL AN 8 MIL THICKNESS HAS BEEN ACHIEVED. SURFACES TO RECEIVE ZINC-RICH PAINT SHALL BE CLEAN, DRY AND FREE OF OIL, GREASE, SALT AND CORROSION PRODUCTS.
13. ALL EMBEDDED STEEL SHALL BE FABRICATED FROM MATERIAL CONFORMING WITH THE REQUIREMENTS OF ASTM A 36. HOT-DIP GALVANIZE IN ACCORDANCE WITH ASTM A 123, UNLESS NOTED OTHERWISE.
14. ALL FLOOR PLATING SHALL BE HOT-DIPPED GALVANIZED, IN ACCORDANCE WITH ASTM A 123.
15. STEEL FLOOR GRATING SHALL BE 1-1/4"x3/16" 19W4, UNLESS NOTED OTHERWISE. MATERIAL, FABRICATION, QUALITY ASSURANCE AND INSTALLATION SHALL COMPLY THE APPLICABLE PROVISIONS AND RECOMMENDATIONS OF THE N.A.A.M.M. METAL BAR GRATING MANUALS (N.N.S.I./N.A.A.M.M. MBGS31 AND MBG532).
    - A. STAIR TREADS SHALL BE 1-1/4"x3/16" 19W4 WITH CHECKERED PLATE NOSING.
    - B. ALL EDGES SHALL BE BANDED. FOR EXTERIOR APPLICATIONS, SERRATED GRATING AND TREAD SHALL BE USED.
    - C. ALL FLOOR GRATING SHALL BE HOT-DIPPED GALVANIZED IN ACCORDANCE WITH ASTM 123.
    - D. FLOOR GRATING SHALL BE FASTENED TO FLOOR STEEL USING GRATING MANUFACTURER'S STAINLESS STEEL HOLDOWN CLIPS, IN ACCORDANCE WITH MANUFACTURER'S INSTRUCTIONS.
    - E. ALL OPENINGS IN GRATING AT LEG SUPPORTS SHALL BE 1" LARGER THAN THE BASE PLATE DIMENSIONS, UNLESS NOTED OTHERWISE.
    - **F.** PROVIDE PIPING OPENINGS IN GRATING AS REQUIRED. ALL OPENINGS THROUGH GRATING SHALL BE BANDED.

DIVISION 06 - WOOD, PLASTICS AND COMPOSITES

FRAMING LUMBER:

1. ALL FRAMING LUMBER SHALL BE DOUGLAS FIR-LARCH AND SHALL BE GRADED UNDER THE MOST RECENTLY ADOPTED RULES OF THE WEST COAST LUMBER INSPECTION BUREAU (WCLIB).
2. ALL BEAMS AND JOISTS SHALL BE NO. 2 MINIMUM, UNLESS INDICATED OTHERWISE ON THE PLANS.
3. ALL STUDS AND BLOCKING SHALL BE NO. 2.
4. ALL LUMBER IN CONTACT WITH CONCRETE OR EXPOSED SHALL BE PRESSURE TREATED IN ACCORDANCE WITH AWPA STANDARD C-2 AND SHALL BEAR THE AWPA QUALITY MARK.
5. DOUBLE ALL JOISTS UNDER WALL PARTITIONS, AND PROVIDE BLOCKING BETWEEN JOISTS WHERE BEARING WALLS ARE PERPENDICULAR TO JOISTS.
6. ALL GLULAM BEAMS TO BE 24F-V4 TYPICAL. 24F-V8 FOR CANTILEVERED OR CONTINUOUS SPAN.
7. ALL LVL LUMBER TO BE MICROLAM LVL OR APPROVED EQUAL.

PLYWOOD SHEATHING:

1. ALL PLYWOOD SHALL BE C-D GRADE WITH EXTERIOR GLUE MANUFACTURED IN ACCORDANCE WITH THE UNITED STATES PRODUCT STANDARDS PS 1-83/ANSI A199.1 "FOR CONSTRUCTION AND INDUSTRIAL PLYWOOD" AND SHALL CONFORM TO OSSC SECTION 2303 AND SHALL BEAR THE APA TRADEMARK OF THE APA.
2. PLYWOOD SHALL BE LAID WITH END JO

HOLDOWN SCHEDULE

(Y)	SIMPSON MODEL	ALLOWABLE LOAD (lb)	POST THICKNESS	FASTENER	ANCHOR	REMARKS
1	HDU5-SDS2.5	5645	3"	(14) 1/4 x 2 1/2" SDS	5/8"	PL1/4x3x0'-3" w/ DBL NUT AT BOT OF THREADED ROD
2	HDU11-SDS2.5	7870	5 1/4"	(30) 1/4 x 2 1/2" SDS	1"	PL1/4x4x0'-5" w/ DBL NUT AT BOT OF THREADED ROD

1. NAILS ARE TO BE COMMON WIRE NAILS, U.N.O.
2. HARDWARE IS TO BE SIMPSON, U.N.O.
3. HOLDOWN HARDWARE CAN BE EXTENDED WITH A307 THREADED ROD AND COUPLER.
4. ALIGN ALL HOLDOWNS FOR THE FULL HEIGHT OF STRUCTURE.
5. ALL HARDWARE TO BE INSTALLED PER MANUFACTURE'S SPECIFICATIONS.
6. HOLDOWN ANCHOR BOLTS ARE IN ADDITION TO TYPICAL SILL PLATE ANCHOR BOLTS.
7. EXTEND THREADED ROD TO WITHIN 3" CLEAR OF BOTTOM OF FOOTING.

SHEAR WALL SCHEDULE

(X)	SHEATHING	NAIL SIZE	EDGE NAILING (o.c.)	FIELD NAILING (o.c.)	PANEL EDGE STUDS	TOP PLATE A35 (o.c.)	BOTTOM PLATE DIMENSION	BOTTOM PLATE FASTENING (o.c.)	SILL PLATE ANCHORAGE (o.c.)	REMARKS
A	15/32" APA RATED	10d	6"	12"	2x	2'-0"	2x	16d @ 6"	5/8" DIA. A.B. @ 3'-6"	
B	15/32" APA RATED	10d	4"	12"	4x OR (2) 2x	1'-6"	2x	16d @ 6"	5/8" DIA. A.B. @ 2'-6"	
C	DBL SIDED 15/32" APA RATED	10d	3"	12"	4x OR (2) 2x	0'-6"	3x	16d @ 3"	5/8" DIA. A.B. @ 9"	

1. ALL PLYWOOD TO BE APA RATED STRUCTURAL 1 EXTERIOR SHEATHING
2. ALL NAILS TO BE COMMON OR GALVANIZED BOX TYPE.
3. ATTACH RIM JOIST AND / OR BLOCKING TO SHEAR WALL AS INDICATED IN TABLE ABOVE.
4. ALL WALL SHEATHING TO EXTEND FULL HEIGHT OF WALL, TOP PLATE TO BOTTOM PLATE.
5. ALL SHEAR WALLS AND HOLDOWNS MUST HAVE CONTINUOUS LOAD PATH TO FOUNDATION.
6. USE PL1/4x3x0'-3" WASHER TYPICAL AT ALL ANCHOR BOLTS.
7. WHERE TOP PLATE FASTENING IS LESS THAN 12" o.c., USE MINIMUM BLOCKING OF 2-1/2" MANUFACTURED LUMBER (MICROLLAM LVL, OR PARALLAM PSL).
8. ALL SHEAR WALLS TO BE FULLY BLOCKED U.N.O. BLOCKING TO MATCH REQUIREMENTS FOR PANEL EDGE STUDS.
9. FOR SHEAR WALLS w/ (2) ROWS OF BOTTOM PLATE NAILING, USE MIN. 1-3/4" RIM BOARD, SPACE ROWS A MIN. OF 1/2" APART, AND STAGGER NAILS.

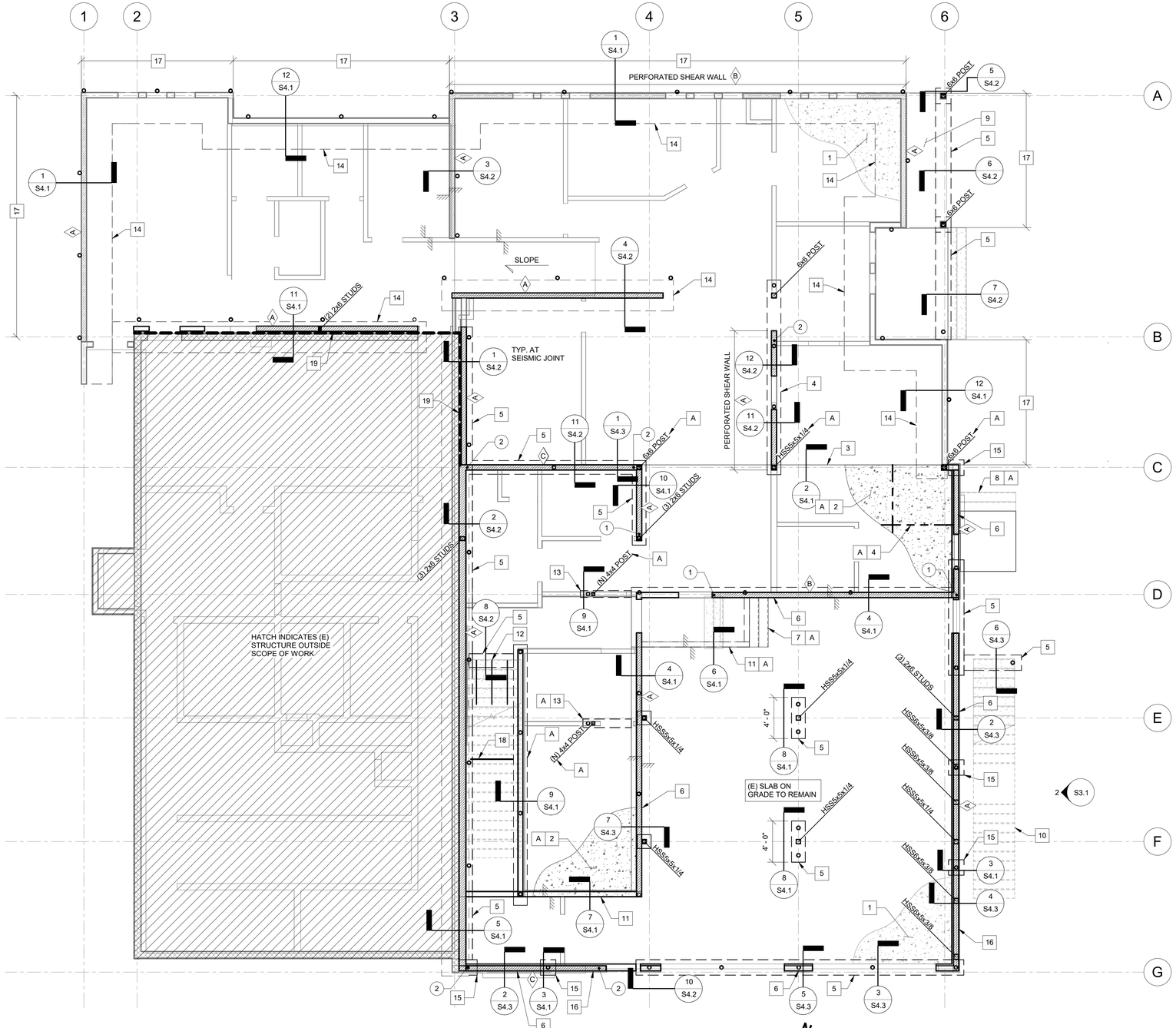

1 S1.1 FOUNDATION PLAN
3/16" = 1'-0"

FOUNDATION AND FRAMING PLAN NOTES:

1. DIMENSIONS SHOWN ARE FOR REFERENCE ONLY, CONFIRM w/ ARCHITECTURAL PLAN & DETAILS.
2. BOTTOM OF FOOTINGS TO BE PLACED BELOW FROST DEPTH OR AS NOTED IN THE GEOTECHNICAL REPORT, WHICHEVER IS GREATER.
3. COORDINATE PENETRATIONS OF SITE UTILITIES, MECHANICAL DUCTS, PIPING, AND ELECTRICAL CONDUIT/PANELS TO MINIMIZE IMPACT TO STRUCTURAL FRAMING. PLUMBING FIXTURES SHOWN ON FLOOR FOR REFERENCE AND POSSIBLE FRAMING CONFLICTS ONLY.
4. ALL FOOTINGS ARE TO BE CENTERED UNDER COLUMNS U.N.O.
5. ALL FOOTINGS TO BEAR OVER GRADE OVER FIRM, UNDISTURBED, NON-ORGANIC, NON-EXPANSIVE NATIVE MATERIAL, OR STRUCTURAL FILL AS REQUIRED PER GEOTECHNICAL REPORT.
6. SEE SHEET S0.1 FOR ALL NOTES AND SCHEDULES.
7. ALL SHORING OF THE EXISTING FRAMING TO BE PROVIDED BY G.C.
8. INDICATES FLOOR STEP REF. ARCHITECTURAL PLANS FOR ADDITIONAL INFORMATION.
9. INDICATES APPROXIMATE LOCATION OF MICROPILE TO BE DESIGNED BY OTHERS. REFERENCE SHEET S1.2 FOR PILE LAYOUT AND LOCATIONS.
10. (X) INDICATES SHEAR WALL TYPE. SEE SHEAR WALL SCHEDULE FOR ADDITIONAL INFORMATION.
11. INDICATES SHEAR WALL LOCATION ABOVE FOUNDATION. SEE SHEAR WALL SCHEDULE FOR ADDITIONAL INFORMATION.
12. (Y) INDICATES HOLDOWN TYPE AND LOCATION. SEE HOLDOWN SCHEDULE FOR ADDITIONAL INFORMATION.
13. X'-X" INDICATES TOP OF SLAB ELEVATION. COORDINATE WITH ARCHITECT.
14. (F-XX) (XXX'-X") INDICATES FOOTING TYPE PER FOUNDATION SCHEDULE AND TOP OF FOOTING ELEVATION.
15. INDICATES (E) WOOD WALL TO RECEIVE (N) WALL SHEATHING PER SHEAR WALL SCHEDULE.
16. INDICATES (E) WOOD WALL TO REMAIN.
17. INDICATES (N) 2x6 @ 16" o.c. BEARING WALL.
18. INDICATES (E) CMU WALL TO REMAIN.

FOUNDATION PLAN KEYNOTE LEGEND: (X)

A. **KEYNOTE (A) INDICATES ITEM IS PART OF REMODEL SCOPE OF WORK AND NOT SEISMIC RETROFIT RELATED. ALL BIDS SHALL CONTAIN SEPARATE LINE-ITEM PRICING THAT DISTINGUISHES REMODEL RELATED SCOPE OF WORK FROM SEISMIC RELATED SCOPE OF WORK.**

1. (E) CONCRETE SLAB.
2. 4" CONCRETE SLAB w/ #4 @ 18" o.c. EACH WAY.
3. INDICATES OUTLINE OF SLAB. EPOXY SLAB REINFORCEMENT 4" MIN EMBED INTO (E) SLAB. REFERENCE DETAIL 3/S4.1 FOR MORE INFORMATION.
4. INDICATES SLAB CONTROL JOINTS @ 12'-0" o.c. REFERENCE DETAIL 8/S4.3.
5. 16" WIDE x 16" DEEP CONT. GRADE BEAM EXTENDING TO PILE w/ (8) #5 LONGITUDINAL REINFORCEMENT AND #4 TIES @ 6" o.c.
6. 8"x16" CONCRETE STEM WALL GRADE BEAM w/ (8) # 5 LONGITUDINAL REINFORCEMENT AND #4 TRANSVERSE TIES @ 6" o.c.
7. INTERIOR CONCRETE STAIRS PER DETAIL 9/S4.2.
8. EXTERIOR CONCRETE STAIRS PER CIVIL.
9. 4" CONCRETE RAMP w/ #4 @ 18" o.c. EACH WAY.
10. STEEL STAIRS, REFRERENCE SHEET S3.1 FOR MORE INFORMATION
11. 6" CONCRETE WALL w/ #4 @ 18" o.c. VERTICALLY AND HORIZONTALLY. EPOXY VERTICALS 4" MIN INTO (E) FOOTING.
12. 1 3/4"x14" STAIR STRINGERS @ 12" o.c.
13. 8" x 1'-6" DEEP CONCRETE GRADE BEAM w/ (6) #5 LONGITUDINAL BARS w/ #4 TRANSVERSE TIES @ 6" o.c.
14. (E) FOOTING TO REMAIN.
15. 1'-6" SQUARE x 1'-0" DEEP PILE CAP w/ (3) #4 TOP AND BOTTOM EACH WAY.
16. 1 3/4" x 5 1/2" LVL @ 16" o.c.
17. SISTER FULL 2x6 STUD TO EXISTING EXTERIOR WALL w/ (2) ROWS STAGGERED IF 16d NAILS.
18. 4x10 BEAM MID SPAN OF STAIR STRINGERS SUPPOERTED BY (2) 2x STUDS BELOW BEAM AND FULL HEIGHT 2x STUD EITHER SIDE.
19. 3" SEISMIC JOINT.

ZCS ENGINEERING ARCHITECTURE
127 NW D Street, Grants Pass, Oregon 97526 | 541-479-3865

REEDSPORT FIRE DISTRICT
124 N 4TH ST.
REEDSPORT, OR 97467

REEDSPORT FIRE STATION 7

STRUCTURAL REGISTERED PROFESSIONAL ENGINEER 70882 OREGON JANUARY 08, 2014 MATTHEW R. SMITH
EXPIRES: 06-30-24

△	DATE:	Description
2		REV 2

PROJECT NO.	G-1468-21
DRAWN:	PWR
CHECKED:	MRS
DATE:	01-24-23

FOUNDATION PLAN

S1.1

95% CONSTRUCTION DOCUMENTS | BID / PERMIT SET

ONE INCH EQUALS FULL SCALE 4/21/2023 10:45:15 AM

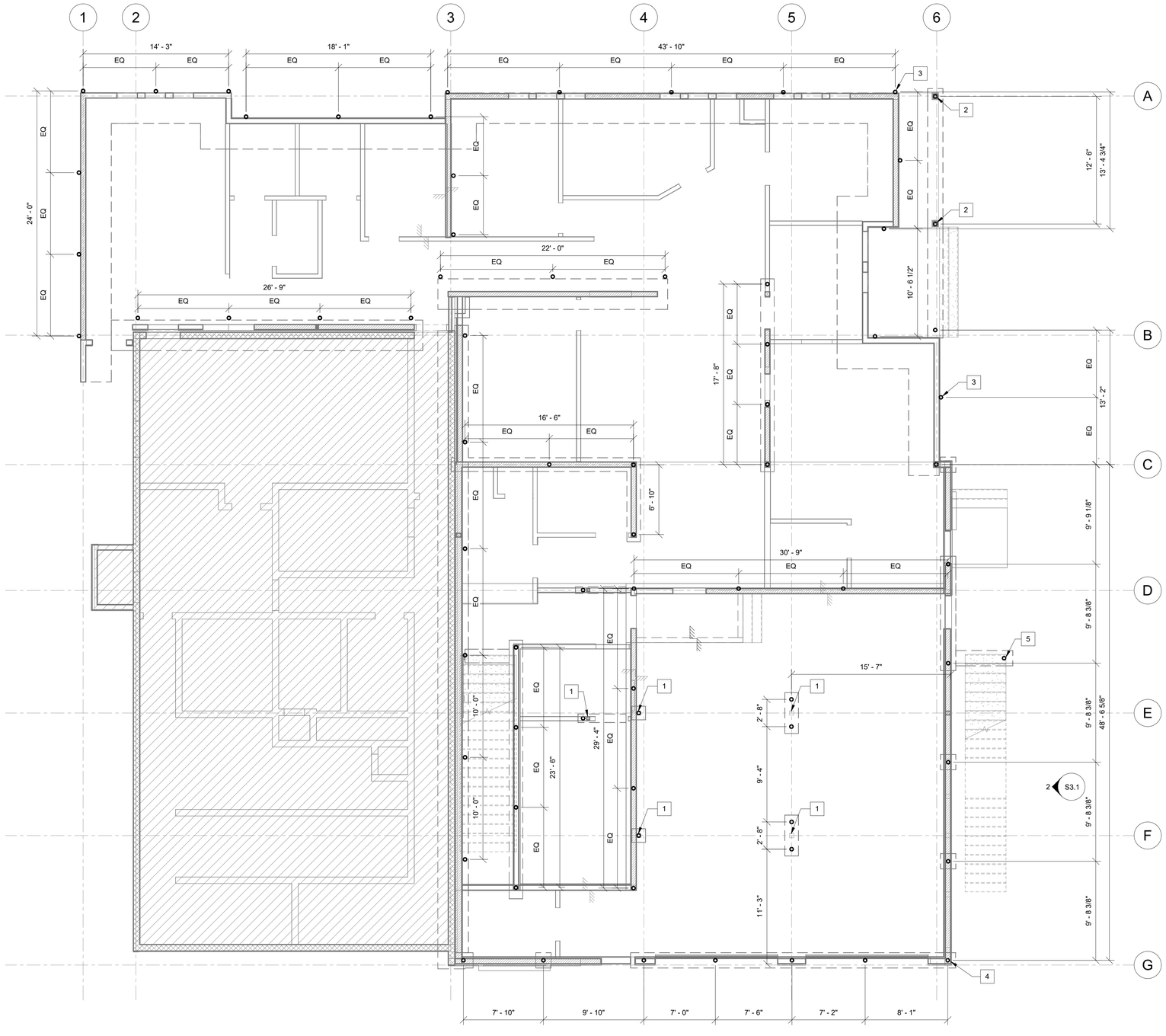

1 / S1.2 PILE LAYOUT PLAN
3/16" = 1'-0"

N

PILE LAYOUT PLAN KEYNOTE LEGEND: X

1. MICROPILE AT (N) HSS COLUMN.
2. MICROPILE POST.
3. MICROPILE ATTACHED TO SIDE OF (E) FOOTING TYP.
4. MICROPILES AT GRADE BEAM TYP.
5. MICROPILES AT STAIR FOOTING.

PILE LAYOUT PLAN NOTES:

A. ALL PILES TO BE DESIGNED FOR 20 KIPS OF AXIAL LOAD AND 5 KIPS OF LATERAL LOADING.

B. INDICATES PILE.

HATCH INDICATES SCOPE OF WORK

ONE INCH EQUALS FULL SCALE 4/21/2023 10:45:16 AM

ZCS ENGINEERING ARCHITECTURE
127 NW D Street, Grants Pass, Oregon 97526 | 541-479-3865

REEDSPORT FIRE DISTRICT
124 N 4TH ST.
REEDSPORT, OR 97467

REEDSPORT FIRE STATION 7

STRUCTURAL REGISTERED PROFESSIONAL ENGINEER
OREGON
JAN. 06, 2014
MATTHEW R. SMITH
EXPIRES: 06-30-24

△	DATE:	Description

PROJECT NO.	G-1468-21
DRAWN:	PWR
CHECKED:	MRS
DATE:	01-24-23

PILE LAYOUT PLAN

S1.2

95% CONSTRUCTION DOCUMENTS | BID / PERMIT SET

SHEAR WALL SCHEDULE

X	SHEATHING	NAIL SIZE	EDGE NAILING (o.c.)	FIELD NAILING (o.c.)	PANEL EDGE STUDS	TOP PLATE A35 (o.c.)	BOTTOM PLATE DIMENSION	BOTTOM PLATE FASTENING (o.c.)	SILL PLATE ANCHORAGE (o.c.)	REMARKS
A	15/32" APA RATED	10d	6"	12"	2x	2'-0"	2x	16d @ 6"	5/8" DIA. A.B. @ 3'-6"	
B	15/32" APA RATED	10d	4"	12"	4x OR (2) 2x	1'-6"	2x	16d @ 6"	5/8" DIA. A.B. @ 2'-6"	
C	DBL SIDED 15/32" APA RATED	10d	3"	12"	4x OR (2) 2x	0'-6"	3x	16d @ 3"	5/8" DIA. A.B. @ 9"	

1. ALL PLYWOOD TO BE APA RATED STRUCTURAL 1 EXTERIOR SHEATHING
2. ALL NAILS TO BE COMMON OR GALVANIZED BOX TYPE.
3. ATTACH RIM JOIST AND / OR BLOCKING TO SHEAR WALL AS INDICATED IN TABLE ABOVE.
4. ALL WALL SHEATHING TO EXTEND FULL HEIGHT OF WALL, TOP PLATE TO BOTTOM PLATE.
5. ALL SHEAR WALLS AND HOLDOWNS MUST HAVE CONTINUOUS LOAD PATH TO FOUNDATION.
6. USE PL1/4x3x0'-3" WASHER TYPICAL AT ALL ANCHOR BOLTS.
7. WHERE TOP PLATE FASTENING IS LESS THAN 12" o.c., USE MINIMUM BLOCKING OF 2-1/2" MANUFACTURED LUMBER (MICROLLAM LVL, OR PARALLAM PSL).
8. ALL SHEAR WALLS TO BE FULLY BLOCKED U.N.O. BLOCKING TO MATCH REQUIREMENTS FOR PANEL EDGE STUDS.
9. FOR SHEAR WALLS w/ (2) ROWS OF BOTTOM PLATE NAILING, USE MIN. 1-3/4" RIM BOARD, SPACE ROWS A MIN. OF 1/2" APART, AND STAGGER NAILS.

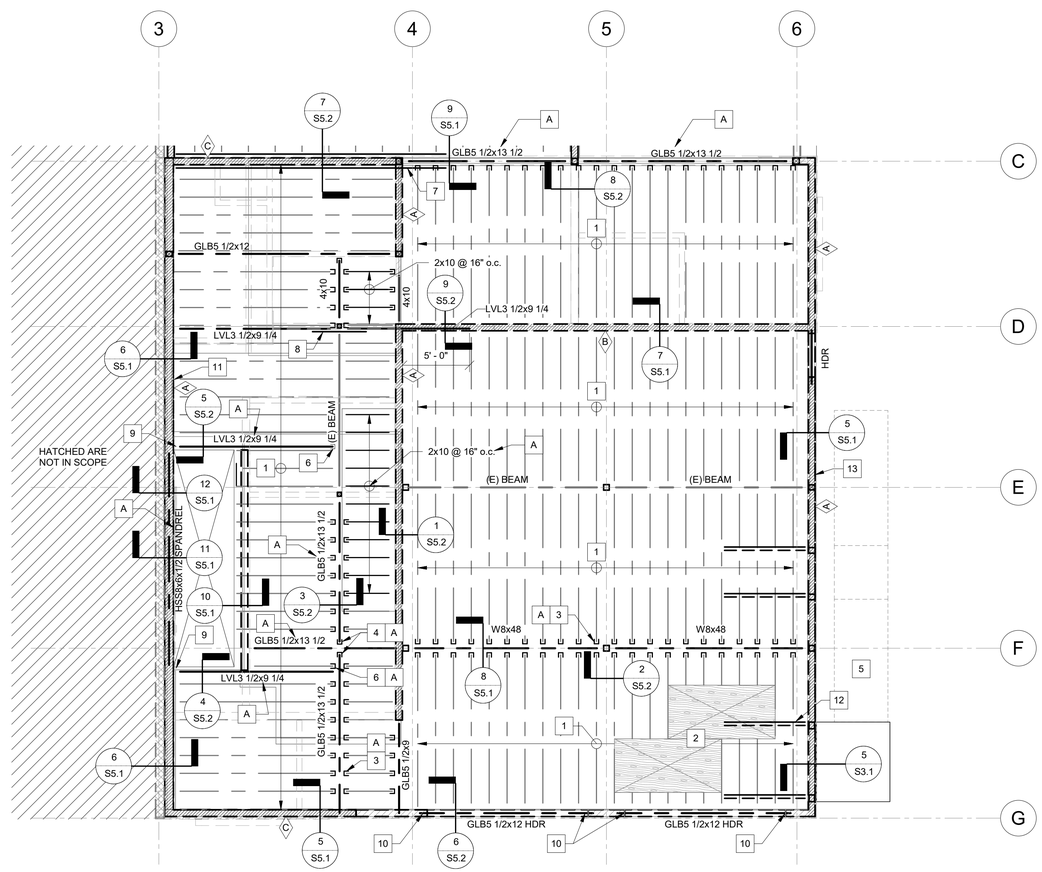

1 / S2.1 SECOND FLOOR FRAMING PLAN
3/16" = 1'-0"

FLOOR FRAMING PLAN NOTES:

1. COORDINATE ALL DIMENSIONS & FEATURES NOT SHOWN WITH ARCHITECT.
2. SEE SHEET S0.1 FOR ALL NOTES AND SCHEDULES.
3. BEAMS ARE CENTERED ON COLUMNS, WALLS, AND/OR GRID LINES, U.N.O.
4. INDICATES SHEAR WALL TYPE. SEE SHEAR WALL SCHEDULE FOR ADDITIONAL INFORMATION.
5. INDICATES SHEAR WALL LOCATION BELOW FRAMING. SEE SHEAR WALL SCHEDULE FOR ADDITIONAL INFORMATION.
6. ALL SHEAR WALLS INDICATED AS "PERFORATED" THE CONTRACTOR SHALL PROVIDE NAILING PATTERN AROUND ALL WALL PENETRATIONS AS CALLED OUT ON FRAMING PLANS IN CORRESPONDENCE WITH THE SHEAR WALL SCHEDULE.
7. PROVIDE A MIMUM OF (2) STUDS BELOW EACH 4x BEAM AND (3) STUDS AT EACH 6x BEAM. CONT. TO FOUNDATION.
8. INDICATES HOLDOWN TYPE AND LOCATION. SEE HOLDOWN SCHEDULE FOR ADDITIONAL INFORMATION.
9. INDICATES (E) WOOD WALL TO RECEIVE (N) WALL SHEATHING PER SHEAR WALL SCHEDULE.
10. INDICATES (E) WOOD WALL TO REMAIN.
11. INDICATES (N) 2x6 @ 16" o.c. BEARING WALL.
12. INDICATES (E) CMU WALL TO REMAIN.

FLOOR FRAMING KEYNOTE LEGEND:

A. **KEYNOTE (A) INDICATES ITEM IS PART OF REMODEL SCOPE OF WORK AND NOT SEISMIC RETROFIT RELATED. ALL BIDS SHALL CONTAIN SEPARATE LINE-ITEM PRICING THAT DISTINGUISHES REMODEL RELATED SCOPE OF WORK FROM SEISMIC RELATED SCOPE OF WORK.**

1. (E) FLOOR FRAMING TO REMAIN.
2. (E) FLOOR SHEATHING TO BE RENAILED w/ 10d NAILS @ 4" o.c. AT PANEL AND BOUNDARY EDGES AND 12" o.c. AT FIELD CONDITIONS. BLOCK ALL UNSUPPORTED PANEL EDGES w/ 2x BLOCKING.
3. SIMPSON LUS210 FACEMOUNT HANGERS.
4. SIMPSON HGUS5.5/10.
5. REFERENCE 1/S3.1 FOR STAIR FRAMING PLAN.
6. SIMPSON LUS410 FACE MOUNT HANGER.
7. (2) SIMPSON CMST 12 STRAPS CONT. ON BOTH SIDES OF BEAM AND SHEAR WALL w/ 6x6 BLOCKING. FILL EVERY OTHER HOLE AT SHEAR WALL, PROVIDE 39" OF END LENGTH AT BEAM w/ (74) 0.162 DIA. x 2 1/2" NAILS.
8. SIMPSON CMST12 5'-6" LONG CENETERED ON END OF BEAM w/ (84) 0.162x2 1/2" LONG NAILS AT BOTH END OF STRAP AT EACH HOLE.
9. 1/4" END PLATE w/ (12) SIMPSON SDS25312.
10. (3) 2x6 TRIMMER STUDS AND (3) 2x6 KING STUDS.
11. LVL3 1/2x7 1/4 @ 16" o.c. STUD WALL.
12. (5) BAYS OF 4x FULL DEPTH BLOCKING w/ 1/4" STEEL STRAP AT BLOCKING.

ZCS ENGINEERING ARCHITECTURE
127 NW D Street, Grants Pass, Oregon 97526 | 541-479-3865

REEDSPORT FIRE DISTRICT
124 N 4TH ST.
REEDSPORT, OR 97467

REEDSPORT FIRE STATION 7

STRUCTURAL REGISTERED PROFESSIONAL ENGINEER 70882 MATTHEW R. SMITH MAY 08, 2014
EXPIRES: 06-30-24

△	DATE:	Description
2		REV 2

PROJECT NO.	G-1468-21
DRAWN:	PWR
CHECKED:	MRS
DATE:	01-24-23

FLOOR FRAMING PLAN

S2.1

95% CONSTRUCTION DOCUMENTS | BID / PERMIT SET

ONE INCH EQUALS FULL SCALE 4/21/2023 10:45:16 AM

SHEAR WALL SCHEDULE

X	SHEATHING	NAIL SIZE	EDGE NAILING (o.c.)	FIELD NAILING (o.c.)	PANEL EDGE STUDS	TOP PLATE A35 (o.c.)	BOTTOM PLATE DIMENSION	BOTTOM PLATE FASTENING (o.c.)	SILL PLATE ANCHORAGE (o.c.)	REMARKS
A	15/32" APA RATED	10d	6"	12"	2x	2'-0"	2x	16d @ 6"	5/8" DIA. A.B. @ 3'-6"	
B	15/32" APA RATED	10d	4"	12"	4x OR (2) 2x	1'-6"	2x	16d @ 6"	5/8" DIA. A.B. @ 2'-6"	
C	DBL SIDED 15/32" APA RATED	10d	3"	12"	4x OR (2) 2x	0'-6"	3x	16d @ 3"	5/8" DIA. A.B. @ 9"	

1. ALL PLYWOOD TO BE APA RATED STRUCTURAL 1 EXTERIOR SHEATHING
2. ALL NAILS TO BE COMMON OR GALVANIZED BOX TYPE.
3. ATTACH RIM JOIST AND / OR BLOCKING TO SHEAR WALL AS INDICATED IN TABLE ABOVE.
4. ALL WALL SHEATHING TO EXTEND FULL HEIGHT OF WALL, TOP PLATE TO BOTTOM PLATE.
5. ALL SHEAR WALLS AND HOLDOWNS MUST HAVE CONTINUOUS LOAD PATH TO FOUNDATION.
6. USE PL1/4x3x0'-3" WASHER TYPICAL AT ALL ANCHOR BOLTS.
7. WHERE TOP PLATE FASTENING IS LESS THAN 12" o.c., USE MINIMUM BLOCKING OF 2-1/2" MANUFACTURED LUMBER (MICROLLAM LVL, OR PARALLAM PSL).
8. ALL SHEAR WALLS TO BE FULLY BLOCKED U.N.O. BLOCKING TO MATCH REQUIREMENTS FOR PANEL EDGE STUDS.
9. FOR SHEAR WALLS w/ (2) ROWS OF BOTTOM PLATE NAILING, USE MIN. 1-3/4" RIM BOARD, SPACE ROWS A MIN. OF 1/2" APART, AND STAGGER NAILS.

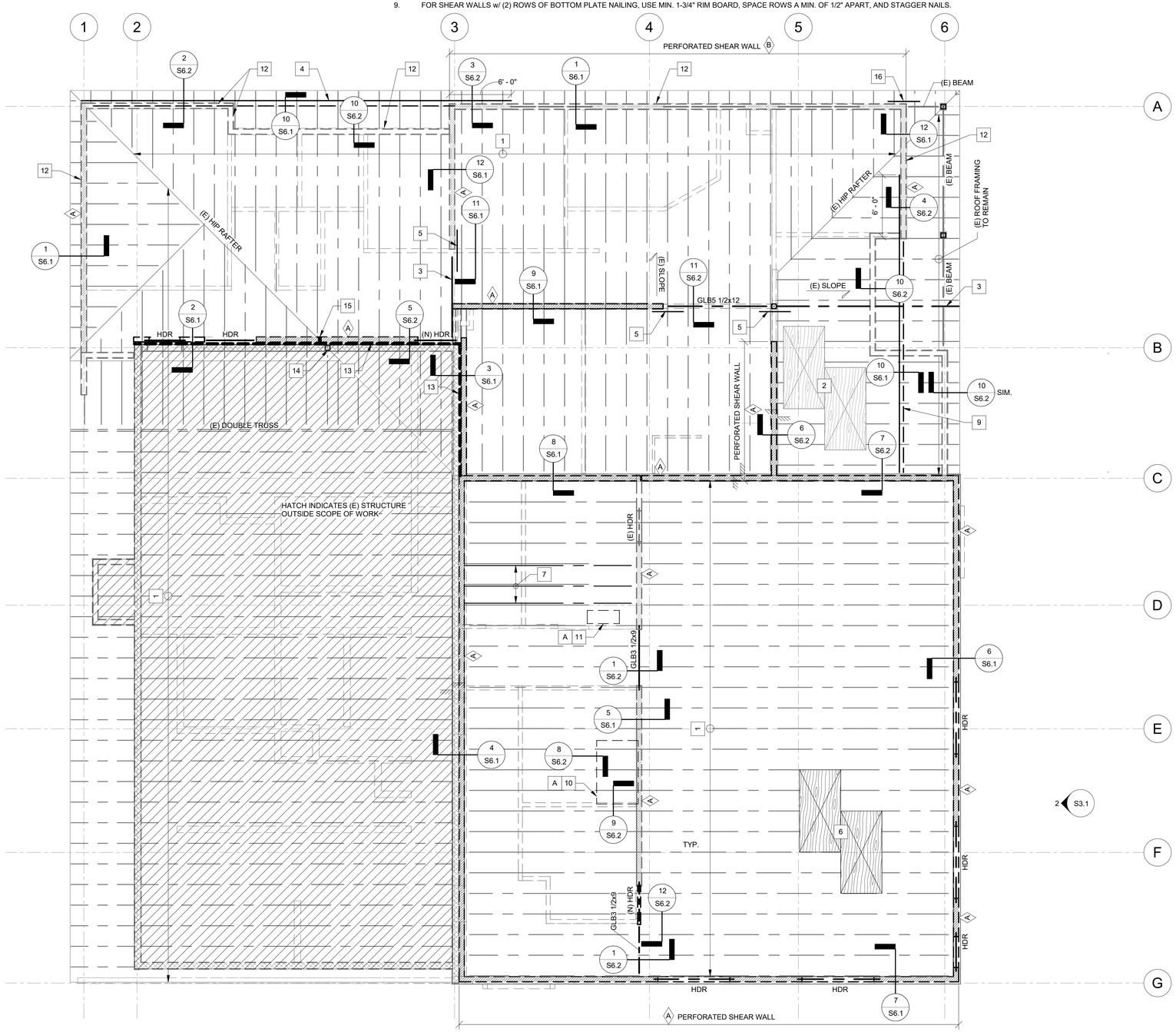

1 / S2.2 ROOF FRAMING PLAN
3/16" = 1'-0"

ROOF FRAMING PLAN NOTES:

1. COORDINATE ALL DIMENSIONS & FEATURES NOT SHOWN WITH ARCHITECT.
2. SEE SHEET S0.1 FOR ALL NOTES AND SCHEDULES.
3. INDICATES ROOF STEP, TYP. SEE ARCHITECTURAL PLANS FOR MORE INFORMATION.
4. BEAMS ARE CENTERED ON COLUMNS, WALLS, AND/OR GRID LINES, U.N.O.
5. INDICATES SHEAR WALL LOCATION BELOW FRAMING. SEE SHEAR WALL SCHEDULE FOR ADDITIONAL INFORMATION.
6. ALL SHEAR WALLS INDICATED AS "PERFORATED" THE CONTRACTOR SHALL PROVIDE NAILING PATTERN AROUND ALL WALL PENETRATIONS AS CALLED OUT ON FRAMING PLANS IN CORRESPONDENCE WITH THE SHEAR WALL SCHEDULE.
7. PROVIDE A MIMUM OF (2) STUDS BELOW EACH 4x BEAM AND (3) STUDS AT EACH 6x BEAM. CONT. TO FOUNDATION.
8. INDICATES HOLDOWN TYPE AND LOCATION. SEE HOLDOWN SCHEDULE FOR ADDITIONAL INFORMATION.
9. INDICATES (E) WOOD WALL TO RECEIVE (N) WALL SHEATHING PER SHEAR WALL SCHEDULE.
10. INDICATES (E) WOOD WALL TO REMAIN.
11. INDICATES (N) 2x6 @ 16" O.C. BEARING WALL.
12. INDICATES (E) CMU WALL TO REMAIN.

ROOF FRAMING KEYNOTE LEGEND:

A. **KEYNOTE (A) INDICATES ITEM IS PART OF REMODEL SCOPE OF WORK AND NOT SEISMIC RETROFIT RELATED. ALL BIDS SHALL CONTAIN SEPARATE LINE-ITEM PRICING THAT DISTINGUISHES REMODEL RELATED SCOPE OF WORK FROM SEISMIC RELATED SCOPE OF WORK.**

1. (E) ROOF FRAMING TO REMAIN.
2. (E) ROOF SHEATHING TO BE RENAILED w/ 10d NAILS @ 6" o.c. AT PANEL EDGES AND 12" o.c. AT FIELD CONDITIONS.
3. 4x6 ALIGNED AT SHEAR WALL.
4. 4x6 BLOCKING AND CMST12 STRAP w/ 0.162"ø x 2 1/2" LONG NAILS IN EVERY OTHER HOLE. EXTEND STRAP OVER TOP OF SHEAR WALL 6'-0" LONG OVER TOP OF WALL OF SHEAR WALL.
5. SIMPSON CMSTC16 STRAP 3'-6" LONG CENTRED ON END OF WALL w/ (50) 0.148"ø x 3 1/4" LONG NAILS ON EITHER END OF STRAP.
6. 5/8" APA RATED ROOF SHEATHING LAID PERPENDICULAR TO 2x RAFTERS AND ATTACHED DIRECTLY TO RAFTERS w/ 10d NAILS @ 6" o.c. AT BOUNDARY EDGES AND 12" o.c. AT FIELD CONDITIONS.
7. 1 1/2" x 9 1/4" LVL SISTERED TO (E) RAFTER w/ (2) ROWS OF 16d NAILS STAGGERED @ 12" o.c. AT HOSE TOWER OPENING.
8. SIMPSON CS20 STRAP EXTENDING 1'-0" OVER TOP OF WALL w/ 0.148"ø x 2 1/2" LONG NAILS AT EACH HOLE.
9. SIMPSON CMSTC16 STRAP EXTEND OVER TOP OF WALL 4'-0". PROVIDE 0.148"ø x 3 1/4" LONG NAILS AT EVERY OTHER HOLE.
10. MECHANICAL UNIT WITH A MAX. WEIGHT OF 900 lbs. PROVIDE FULL DEPTH BLOCKING AT MECHANICAL UNIT PERIMETER.
11. MECHANICAL UNIT WITH A MAX. WEIGHT OF 150 lbs. PROVIDE FULL DEPTH BLOCKING AT MECHANICAL UNIT PERIMETER.
12. SISTER FULL 2x6 STUD TO EXISTING EXTERIOR WALL w/ (2) ROWS STAGGERED IF 16d NAILS.
13. 3" SEISMIC JOINT.
14. 4x4 POST.
15. (2) 2x STUDS TO CONTINUE TO FOUNDATION.
16. SIMPSON MSTC28 STRAP CENTERED ON END OF BEAM AND ATTACHED TO DOUBLE TOP PLATE.

HATCH INDICATES SCOPE OF WORK

ZCS ENGINEERING ARCHITECTURE
127 NW D Street, Grants Pass, Oregon 97526 | 541-479-3865

REEDSPORT FIRE DISTRICT
124 N 4TH ST.
REEDSPORT, OR 97467

REEDSPORT FIRE STATION 7

STRUCTURAL REGISTERED PROFESSIONAL ENGINEER 70889 MATTHEW R. SMITH
EXPIRES: 06-30-24

△	DATE:	Description
2		REV 2

PROJECT NO.	G-1468-21
DRAWN:	PWR
CHECKED:	MRS
DATE:	01-24-23

ROOF FRAMING PLAN

S2.2

95% CONSTRUCTION DOCUMENTS | BID / PERMIT SET

ONE INCH EQUALS FULL SCALE 4/21/2023 10:45:17 AM

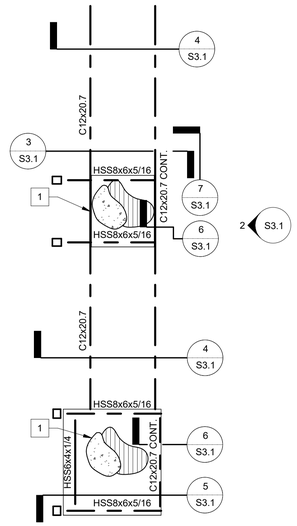

STAIR FRAMING PLAN KEYNOTE LEGEND: X

1. 2" TOPPING CONCRETE SLAB TOTAL THICKNESS OF 3 1/2" w/ #3 @ 16" o.c. ON 1 1/2" VERCO PLB FORMLOCK 18" 20 GA. METAL DECK (4" TOTAL DEPTH) DECKING BOUNDARY w/ HILTI X-ENP-19 AT EACH FLUTE AND DECKING SIDELAPS w/ PUNCHLOK II TOOL @ 24" o.c.

1 S3.1 SECOND FLOOR FRAMING PLAN
1/4" = 1'-0"

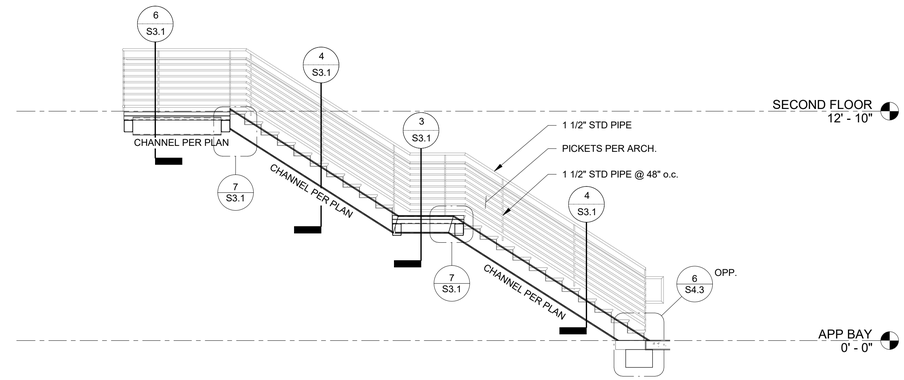

2 S3.1 EXTERIOR STAIR ELEVATION
1/4" = 1'-0"

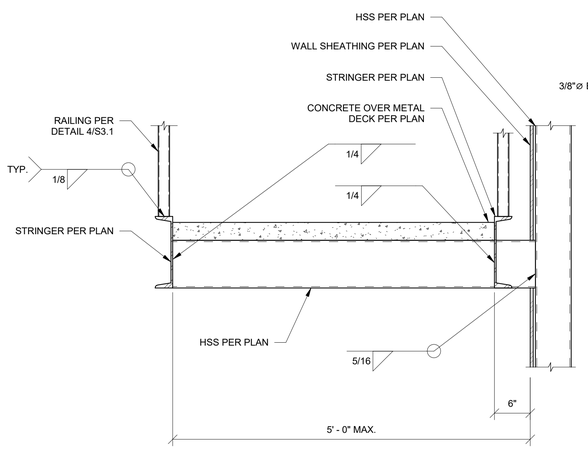

3 S3.1 STAIRS ATTACHMENT AT LANDING
1" = 1'-0"

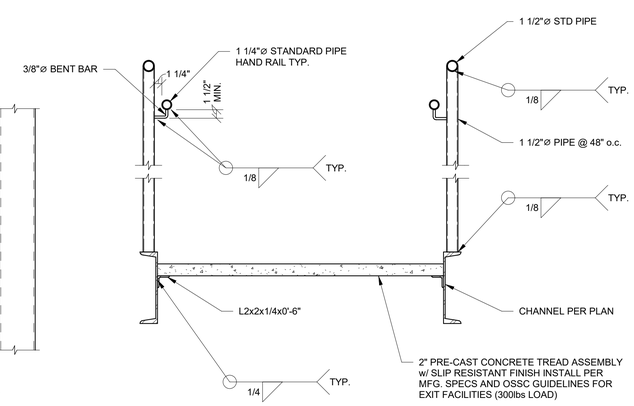

4 S3.1 CONCRETE DECKING ATTACHMENT TO BEAMS
1" = 1'-0"

NOTE:
DOUBLE TOP PLATE IS NOT CONTINUOUS AT HSS COLUMN

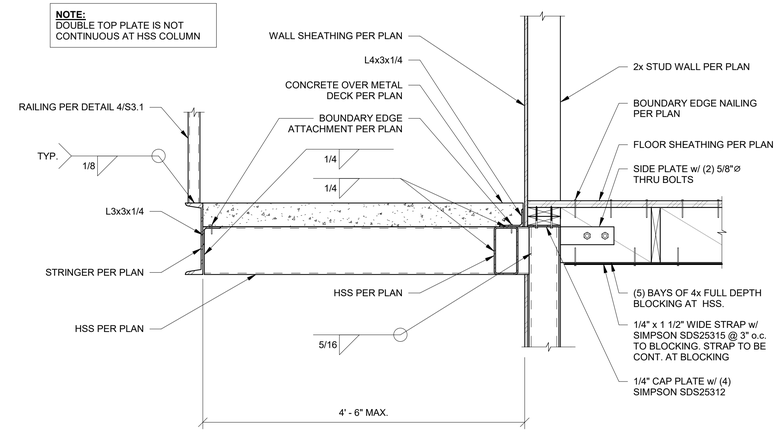

5 S3.1 STAIRS ATTACHMENT AT UPPER LANDING
1" = 1'-0"

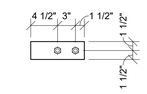

SIDE PLATE

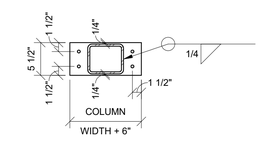

CAP PLATE

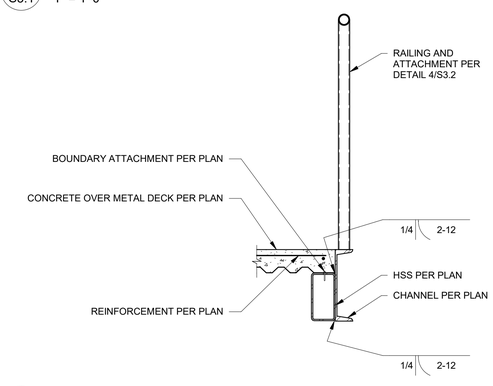

6 S3.1 LOWER LANDING PERIMETER BEAM
1" = 1'-0"

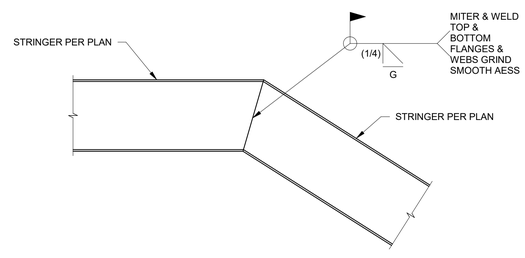

7 S3.1 STRINGER LANDING WELD
1" = 1'-0"

ONE INCH EQUALS FULL SCALE 4/21/2023 10:45:17 AM

ZCS ENGINEERING ARCHITECTURE
127 NW D Street, Grants Pass, Oregon 97526 | 541-479-3865

REEDSPORT FIRE DISTRICT
124 N 4TH ST.
REEDSPORT, OR 97467

REEDSPORT FIRE STATION 7

STRUCTURAL REGISTERED PROFESSIONAL ENGINEER 70882 MATTHEW R. SMITH MAY 08, 2014 EXPIRES: 06-30-24

△	DATE:	Description

PROJECT NO.	G-1468-21
DRAWN:	PWR
CHECKED:	MRS
DATE:	01-24-23

EXTERIOR STAIR PLAN, ELEVATION & DETAILS

S3.1

95% CONSTRUCTION DOCUMENTS | BID / PERMIT SET

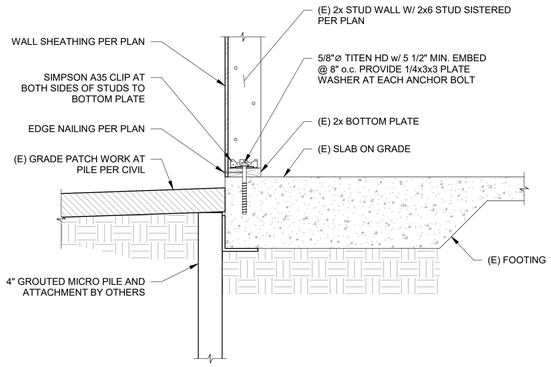

1 S4.1 EXTERIOR SHEAR WALLS AT (E) FOOTING
1" = 1'-0"

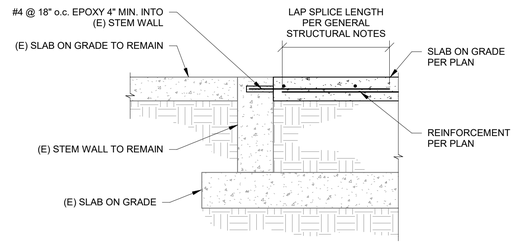

2 S4.1 NEW SLAB TO (E) STEM WALL
1" = 1'-0"

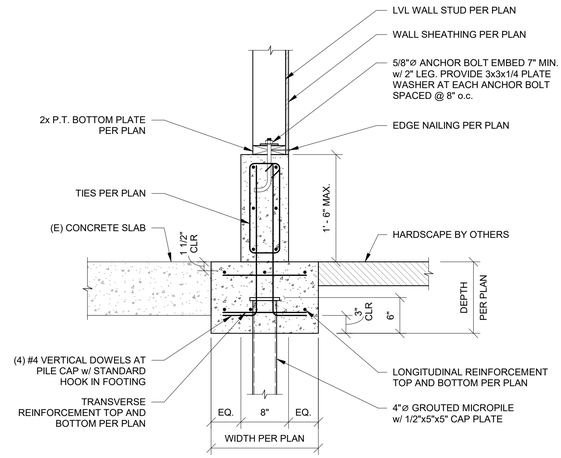

3 S4.1 TYPICAL EXTERIOR GRADE BEAM
1" = 1'-0"

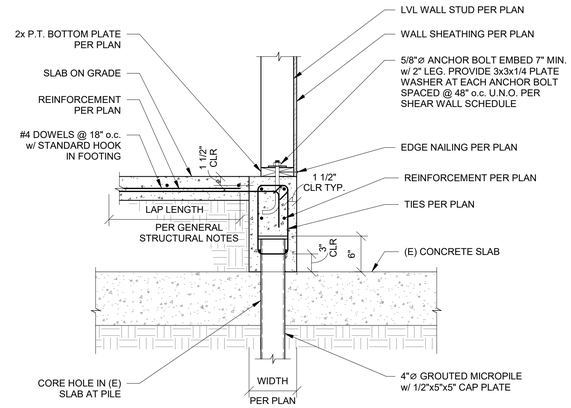

4 S4.1 NEW SLAB TO (E) STEM WALL
1" = 1'-0"

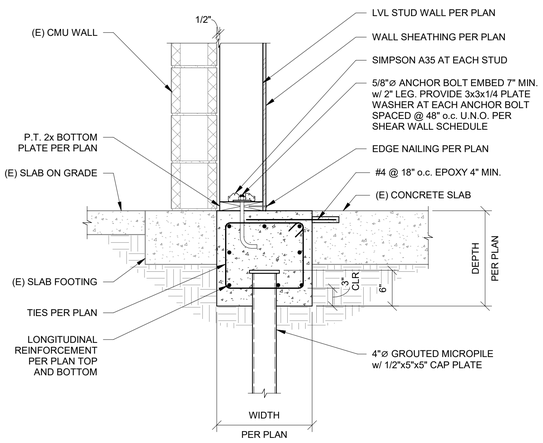

5 S4.1 GRADE BEAM AT (E) CMU WALL
1" = 1'-0"

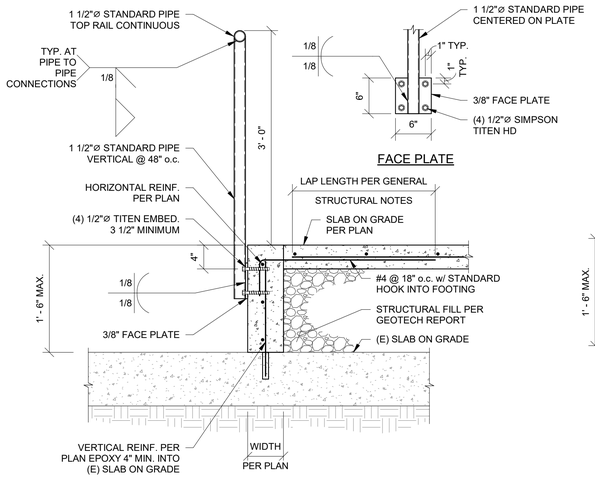

6 S4.1 SLAB STEP AT LANDING
1" = 1'-0"

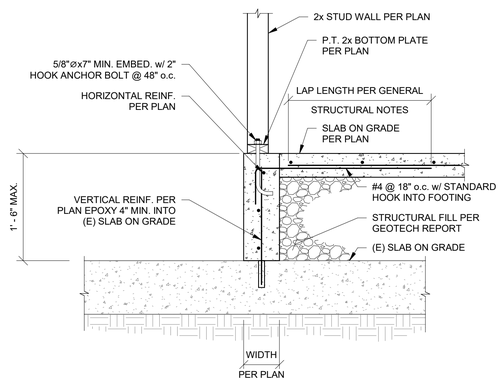

7 S4.1 NON-BEARING WALL AT SLAB STEP
1" = 1'-0"

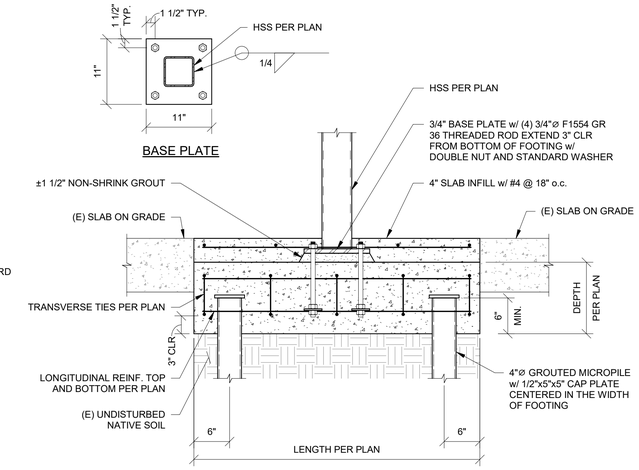

8 S4.1 APPARATUS BAY COLUMN FOOTINGS
1" = 1'-0"

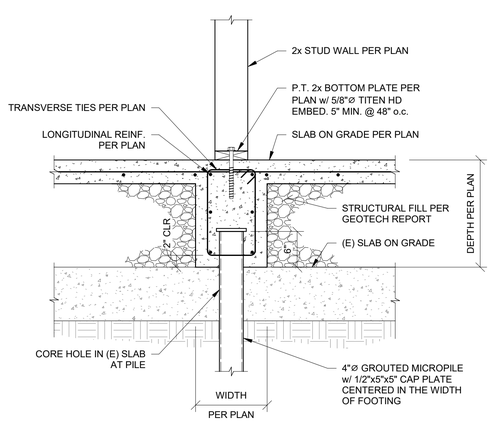

9 S4.1 GRADE BEAM AT INTERIOR BEARING WALL
1" = 1'-0"

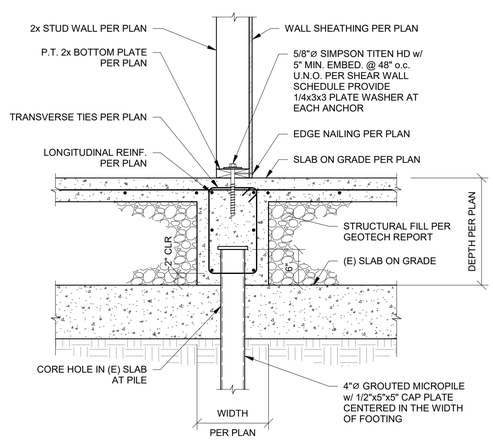

10 S4.1 GRADE BEAM AT INTERIOR BEARING WALL
1" = 1'-0"

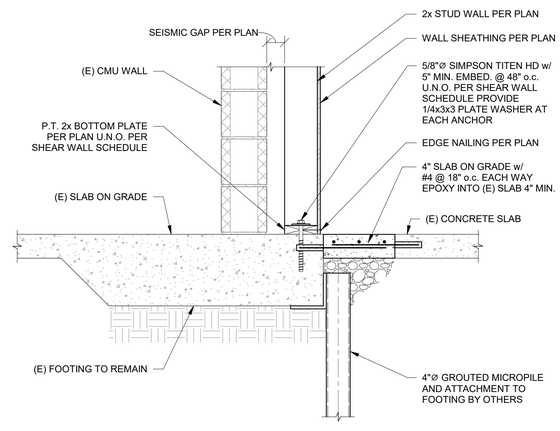

11 S4.1 SEISMIC GAP AT EXISTING FOOTING
1" = 1'-0"

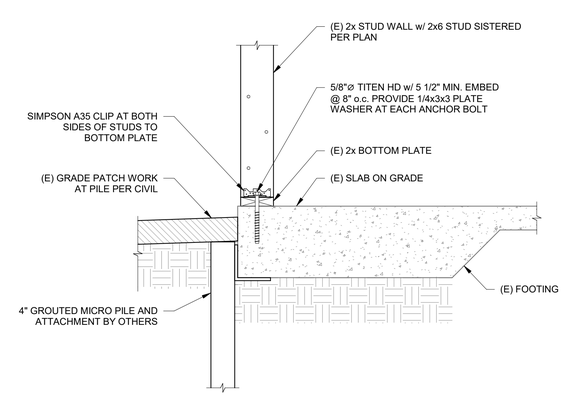

12 S4.1 EXTERIOR WALL STUD ATTACHMENT
1" = 1'-0"

ONE INCH EQUALS FULL SCALE 4/21/2023 10:45:18 AM

ZCS ENGINEERING ARCHITECTURE
127 NW D Street, Grants Pass, Oregon 97526 | 541-479-3865

REEDSPORT FIRE DISTRICT
124 N 4TH ST.
REEDSPORT, OR 97467

REEDSPORT FIRE STATION 7

REEDSPORT FIRE DEPT. VOLUNTEER

STRUCTURAL ENGINEER REGISTERED PROFESSIONAL 70888 OREGON JULY 08, 2014 MATTHEW R. SMITH
EXPIRES: 06-30-24

△	DATE:	Description

PROJECT NO.	G-1468-21
DRAWN:	PWR
CHECKED:	MRS
DATE:	01-24-23

FOUNDATION DETAILS

S4.1

95% CONSTRUCTION DOCUMENTS | BID / PERMIT SET

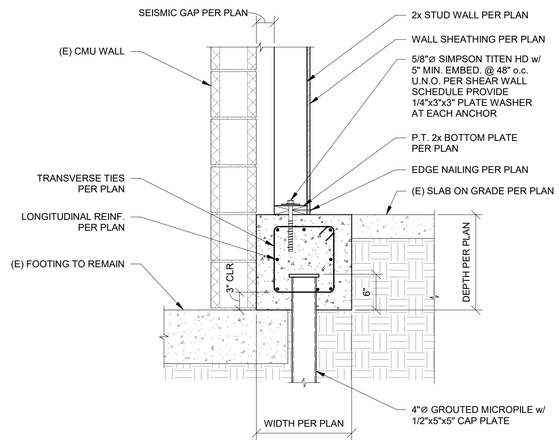

1 S4.2 NEW FOOTING AND WALL AT SEISMIC GAP
1" = 1'-0"

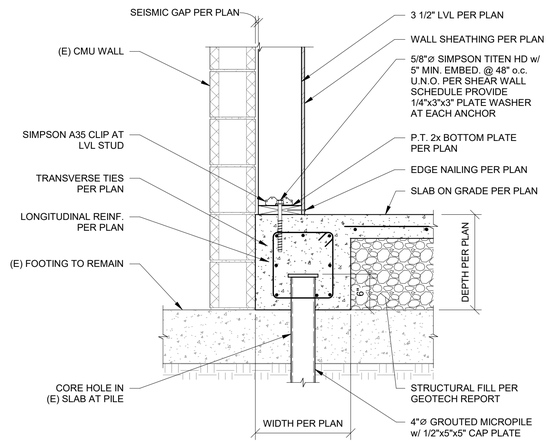

2 S4.2 GRADE BEAM AT JAIL WALL
1" = 1'-0"

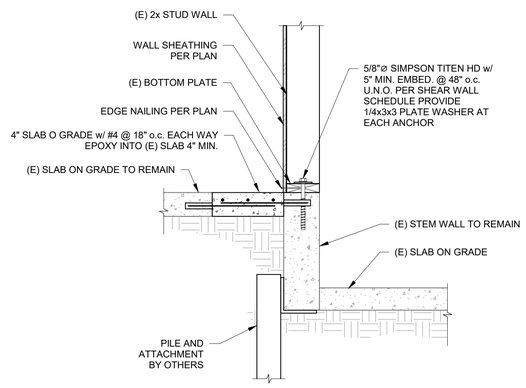

3 S4.2 SHEAR WALL AT WALL SLAB STEP
1" = 1'-0"

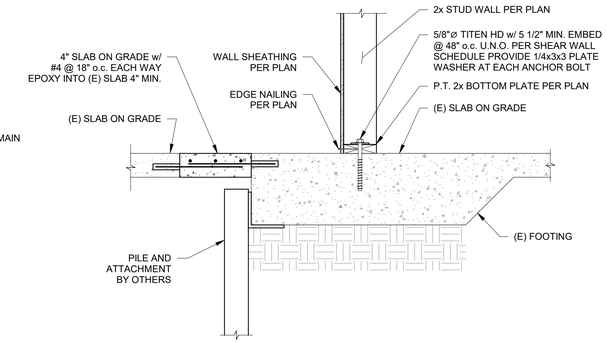

4 S4.2 SHEARWALL AT INTERIOR FOOTING
1" = 1'-0"

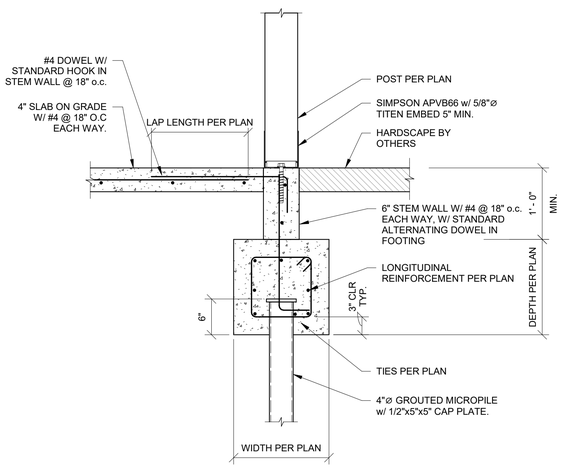

5 S4.2 EXTERIOR POST AT RAMP
1" = 1'-0"

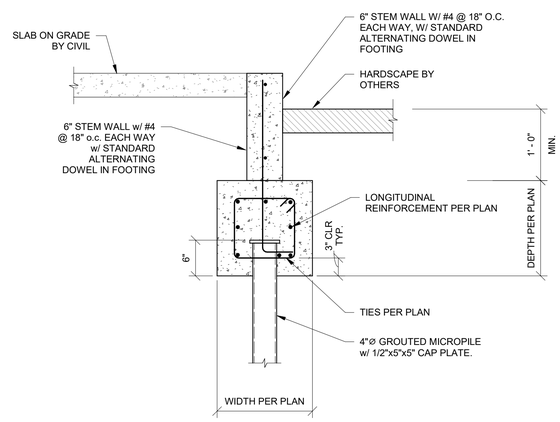

6 S4.2 GRADE BEAM AT RAMP
1" = 1'-0"

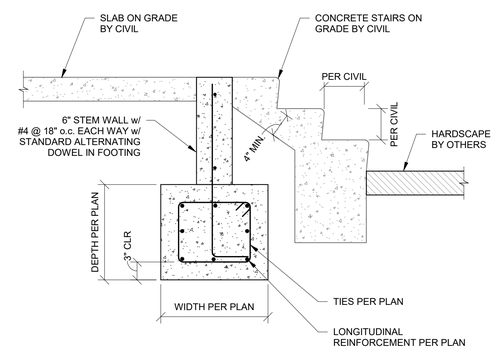

7 S4.2 CONCRETE STAIRS AT GRADE BEAM
1" = 1'-0"

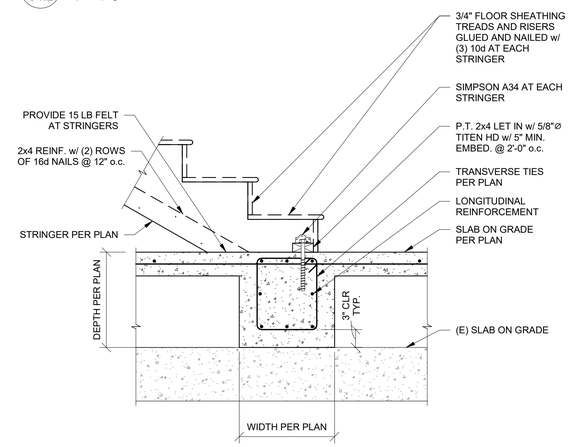

8 S4.2 STAIR STRINGER AT FOOTING
1" = 1'-0"

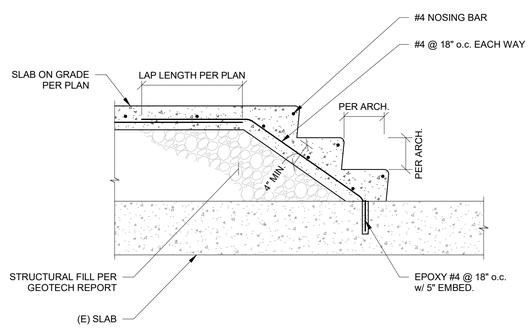

9 S4.2 CONCRETE STAIRS AT APP BAY
1" = 1'-0"

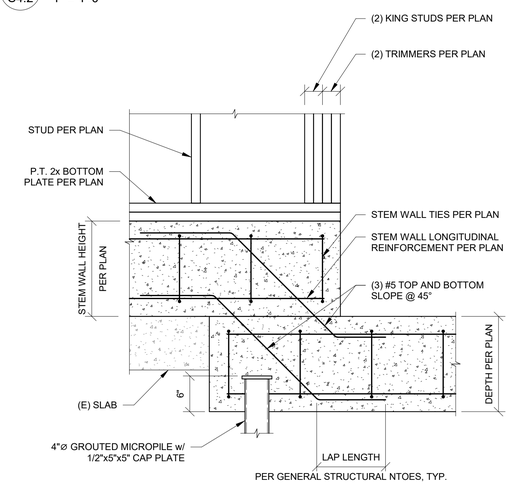

10 S4.2 GRADE BEAM STEP AT OPENING
1" = 1'-0"

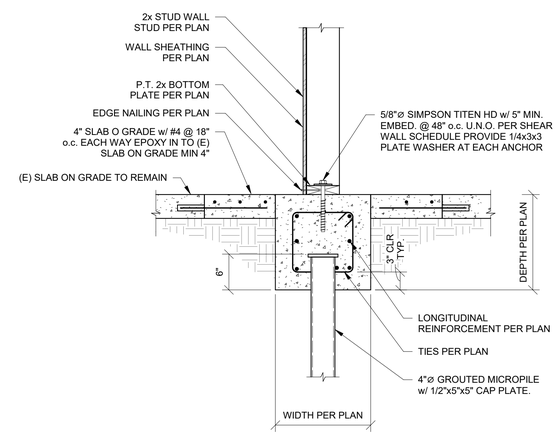

11 S4.2 SHEAR WALL AT NEW GRADE BEAM
1" = 1'-0"

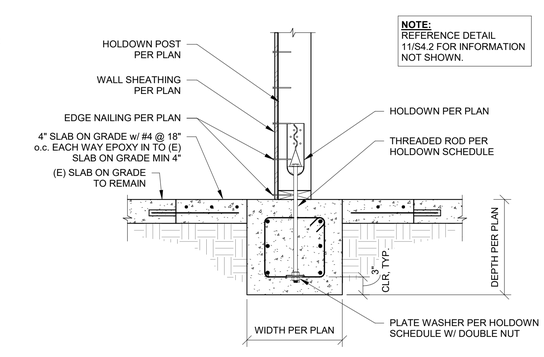

12 S4.2 HOLDOWN AT INTERIOR GRADE BEAM
1" = 1'-0"

ONE INCH EQUALS FULL SCALE 4/21/2023 10:45:18 AM

ZCS ENGINEERING ARCHITECTURE
127 NW D Street, Grants Pass, Oregon 97526 | 541-479-3865

REEDSPORT FIRE DISTRICT
124 N 4TH ST.
REEDSPORT, OR 97467

REEDSPORT FIRE STATION 7

REEDSPORT FIRE DEPT. VOLUNTEER

STRUCTURAL REGISTERED PROFESSIONAL ENGINEER OREGON MATTHEW R. SWITH
EXPIRES: 06-30-24

△	DATE:	Description

PROJECT NO.	G-1468-21
DRAWN:	PWR
CHECKED:	MRS
DATE:	01-24-23

FOUNDATION DETAILS

S4.2

95% CONSTRUCTION DOCUMENTS | BID / PERMIT SET

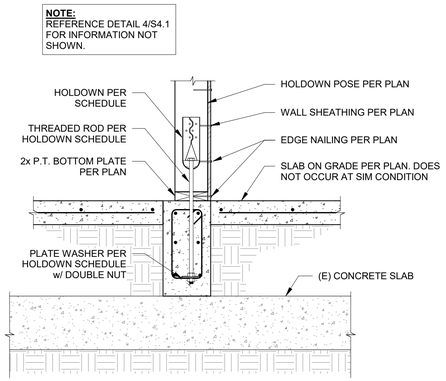

1 S4.3 HOLDOWN AT APP BAY
1" = 1'-0"

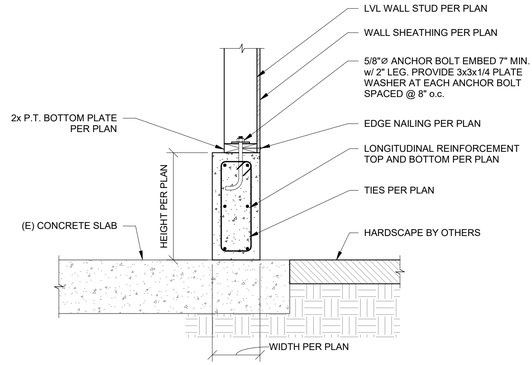

2 S4.3 STEMWALL AT APP BAY SLAB
1" = 1'-0"

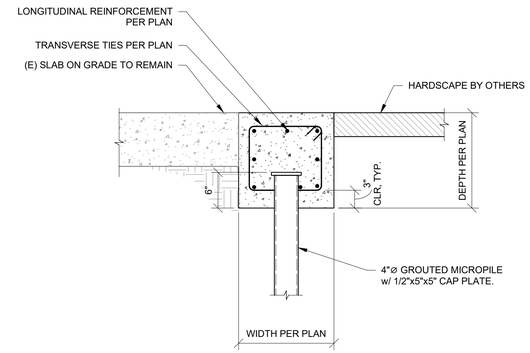

3 S4.3 GRADE BEAM AT APP BAY DOORS
1" = 1'-0"

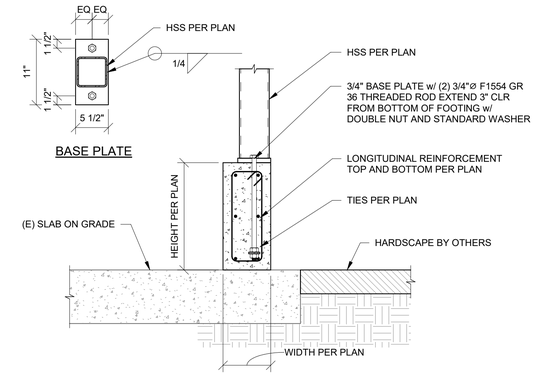

4 S4.3 HSS ATTACHMENT AT STEM WALL
1" = 1'-0"

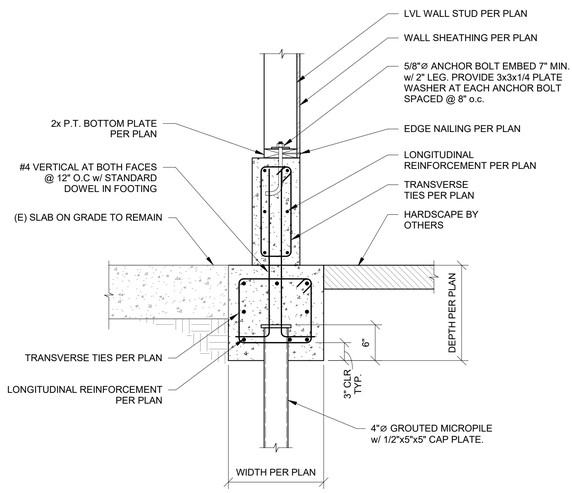

5 S4.3 STEM WALL AT GRADE BEAM
1" = 1'-0"

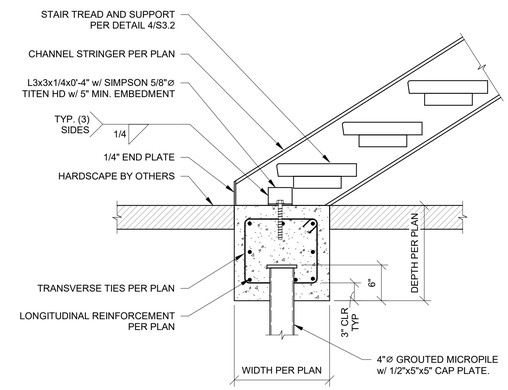

6 S4.3 STAIR STRINGER AT GRADE BEAM
1" = 1'-0"

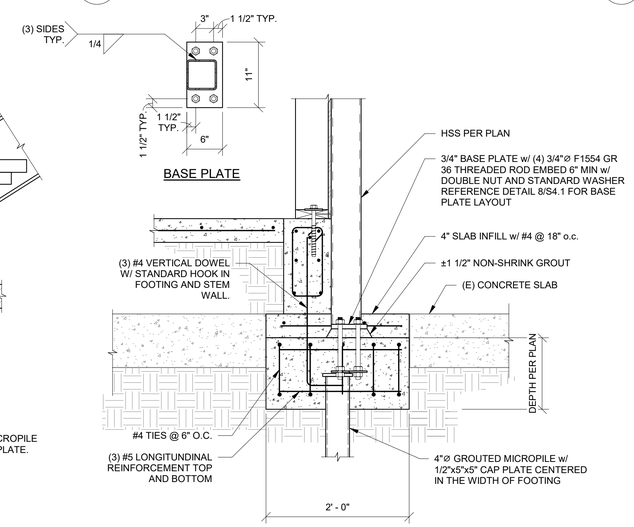

7 S4.3 HSS COLUMN AT APP BAY STEP
1" = 1'-0"

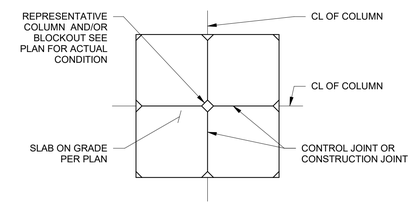

NOTES:

1. SEE PLAN FOR SLAB ON GRADE THICKNESS AND REINFORCEMENT.
2. CONTRACTOR SHALL SUBMIT SHOP DRAWINGS SHOWING JOINT LAYOUT FOR REVIEW AND APPROVAL BY ARCHITECT AND STRUCTURAL ENGINEER.
3. SEE ARCHITECTURAL DRAWINGS FOR SPECIFIC JOINT LAYOUT WITH JOINT SPACING NOT TO EXCEED 12'-0" EACH WAY.
4. SEE DETAIL 9/S4.3 FOR CONTROL JOINT INFORMATION.
5. SAWED JOINTS SHALL BE MADE AS SOON AS THE JOINT CAN BE CUT WITHOUT EDGES RAVELING AND WITHIN 12 HOURS OF SLAB PLACEMENT.

8 S4.3 JOINTS AT SLAB ON GRADE
1" = 1'-0"

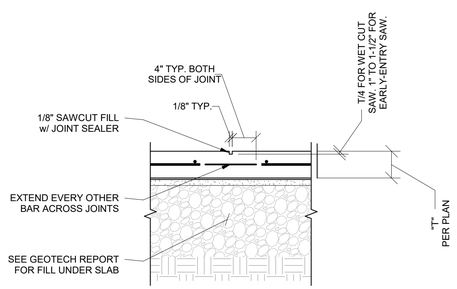

SAW CUT JOINT

9 S4.3 CONTROL JOINTS IN SLAB ON GRADE
1" = 1'-0"

ONE INCH EQUALS FULL SCALE 4/21/2023 10:45:18 AM

ZCS ENGINEERING ARCHITECTURE
127 NW D Street, Grants Pass, Oregon 97526 | 541-479-3865

REEDSPORT FIRE DISTRICT
124 N 4TH ST.
REEDSPORT, OR 97467

REEDSPORT FIRE STATION 7

REEDSPORT FIRE DEPT. VOLUNTEER

STRUCTURAL REGISTERED PROFESSIONAL ENGINEER 70882 MAY 08, 2014 MATTHEW R. SMITH
EXPIRES: 06-30-24

△	DATE:	Description

PROJECT NO.	G-1468-21
DRAWN:	PWR
CHECKED:	MRS
DATE:	01-24-23

FOUNDATION DETAILS

S4.3

95% CONSTRUCTION DOCUMENTS | BID / PERMIT SET

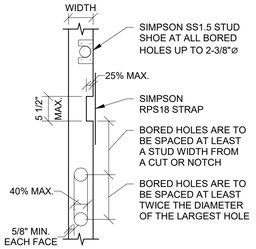

STUD OF EXTERIOR/BEARING WALLS

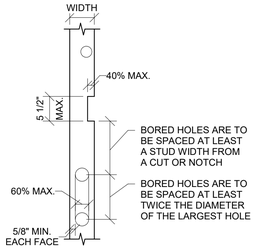

STUD OF NON-BEARING WALLS

NOTES:
1. ALL HOLES TO BE DRILLED, NOT SAWN.
2. ALL NOTHES TO HAVE PRE-DRILLED CORNERS.
3. ENGINEERED LUMBER: ALL CUTS, NOTCHES AND HOLES BORED IN TRUSSES, STRUCTURAL COMPOSITE LUMBER, STRUCTURAL GLUE-LAMINATED MEMBERS AND I-JOISTS PROHIBITED EXCEPT AS PERMITTED PER MANUFACTURERS RECOMMENDATIONS.
4. BORINGS SHALL NOT BE MADE AT THE SAME SECTION WHERE CUT OR NOTCH HAS BEEN MADE.
5. BORED HOLES, CUTS OR NOTCHES ARE NOT PERMITTED IN MORE THAN THREE ADJACENT STUDS WITHOUT REVIEW BY ENGINEER.
6. PROVIDE SIMPSON NAIL STOPPERS AT ALL SHEAR WALLS.

1 S5.1 ALLOWABLE HOLES AND CUTS IN 2x STUDS
3/4" = 1'-0"

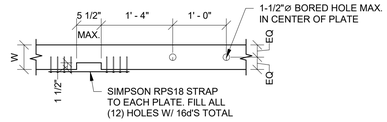

DOUBLE TOP PLATES - PLAN VIEW

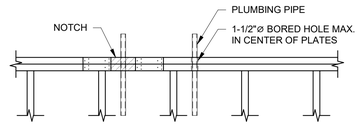

DOUBLE TOP PLATES - SIDE VIEW

NOTES:
1. ALL HOLES TO BE DRILLED, NOT SAWN.
2. ALL NOTCHES TO HAVE PRE-DRILLED CORNERS.
3. LARGER CUTS, NOTCHES BORED HOLES ARE PROHIBITED WITHOUT WRITTEN CONSENT OF ENGINEER.
4. BORINGS SHALL NOT BE MADE AT THE SAME SECTION WHERE CUT OR NOTCH HAS BEEN MADE.

2 S5.1 ALLOWABLE HOLES, CUTS, AND NOTCHES IN 2x DOUBLE TOP PLATE
3/4" = 1'-0"

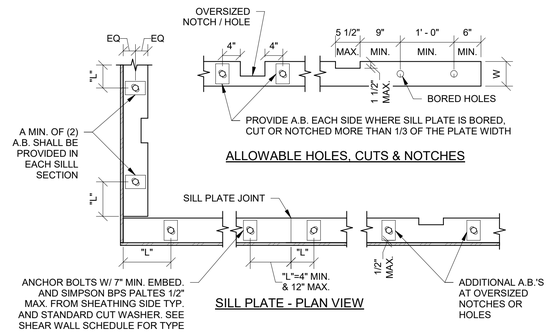

ALLOWABLE HOLES, CUTS & NOTCHES

SILL PLATE - PLAN VIEW

NOTES:
1. ALL SILL PLATES SHALL BE P.T. D.F. OF WIDTH EQUAL TO DEPTH OF STUDS.
2. ALL OVERSIZED BOLT HOLES (HOLES > 1/16" + A.B. ø) SHALL BE FILLED W/ EPOXY FOR TIGHT FIT.
3. LOCATE BOLTS CLEAR OF STUDS & POSTS.
4. PROVIDE A MIN. OF (2) BOLTS PER SILL PIECE.
5. WHERE SHEATHING OCCURS ON BOTH FACES, ALTERNATE LOCATION OF PLATE WASHERS BETWEEN FACES.

3 S5.1 TYP. SILL PLATE ANCHORAGE
3/4" = 1'-0"

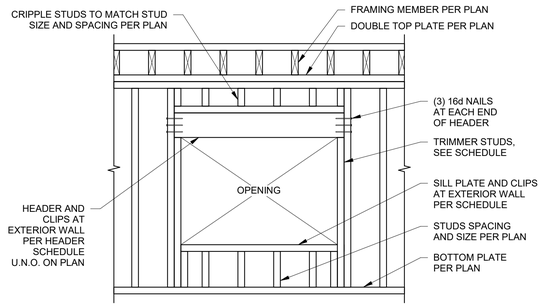

4 S5.1 TYP. HEADER SCHEDULE AND CONNECTION
3/4" = 1'-0"

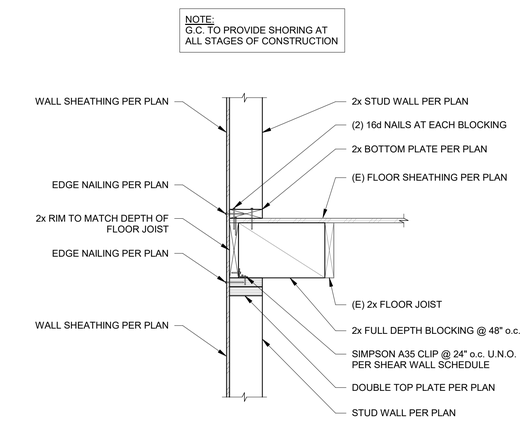

5 S5.1 PERIMETER FLOOR FRAMING AT PARALLEL JOIST
1" = 1'-0"

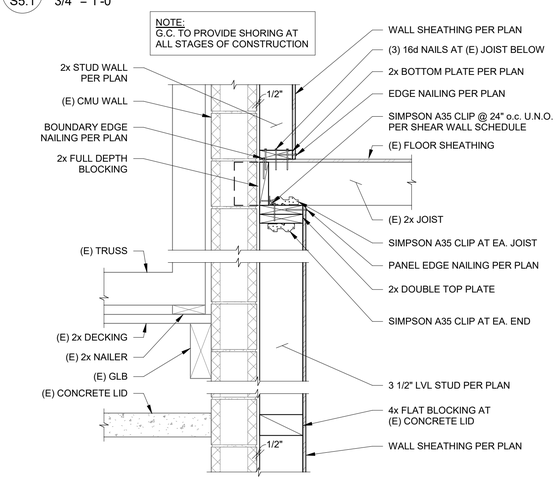

6 S5.1 FLOOR FRAMING AT (E) CMU WALL
1" = 1'-0"

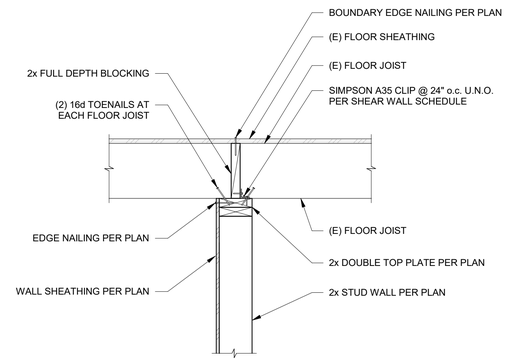

7 S5.1 INTERIOR SHEAR WALL AT FLOOR JOIST
1" = 1'-0"

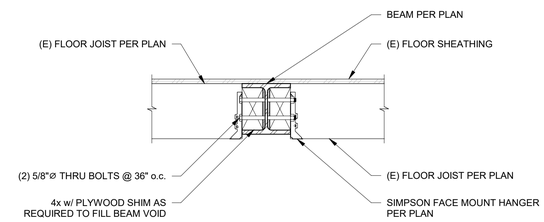

8 S5.1 PERIMETER FLOOR FRAMING AT PARALLEL JOIST
1" = 1'-0"

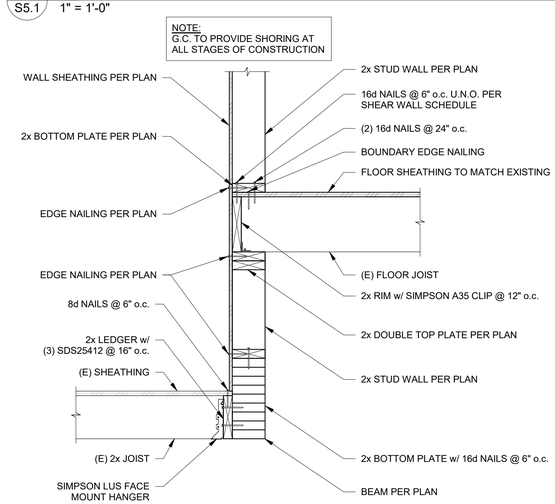

9 S5.1 PERIMETER FLOOR FRAMING AT PARALLEL JOIST
1" = 1'-0"

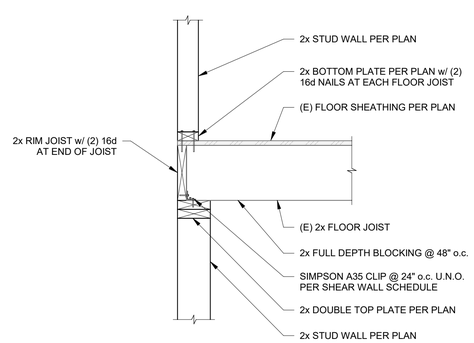

10 S5.1 BEARING WALL AT STAIRS
1" = 1'-0"

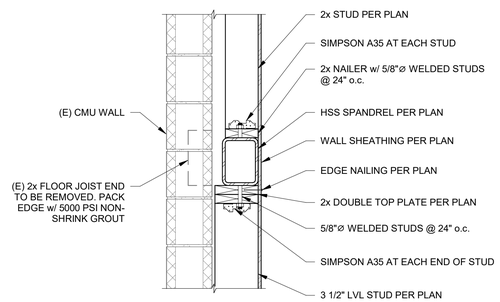

11 S5.1 WALL FRAMING AT STAIR OPENING
1" = 1'-0"

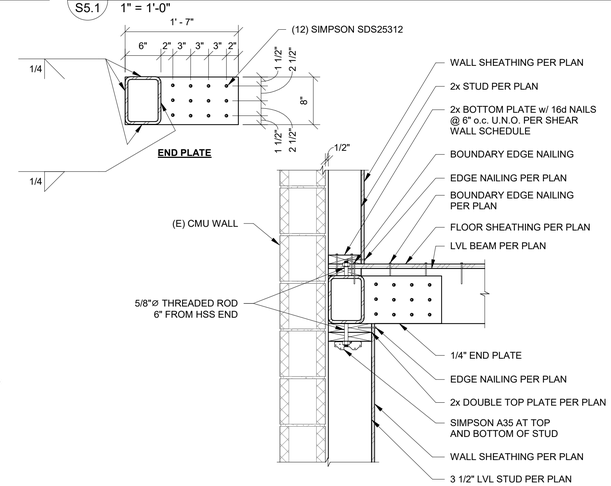

12 S5.1 PERIMETER FLOOR FRAMING AT PARALLEL JOIST
1" = 1'-0"

ONE INCH EQUALS FULL SCALE 4/21/2023 10:45:18 AM

ZCS ENGINEERING ARCHITECTURE
127 NW D Street, Grants Pass, Oregon 97526 | 541-479-3865

REEDSPORT FIRE DISTRICT
124 N 4TH ST.
REEDSPORT, OR 97467

REEDSPORT FIRE STATION 7

STRUCTURAL REGISTERED PROFESSIONAL ENGINEER OREGON MATTHEW R. SMITH JAN 08, 2014
EXPIRES: 06-30-24

△	DATE:	Description

PROJECT NO.	G-1468-21
DRAWN:	PWR
CHECKED:	MRS
DATE:	01-24-23

FLOOR FRAMING DETAILS

S5.1

95% CONSTRUCTION DOCUMENTS | BID / PERMIT SET

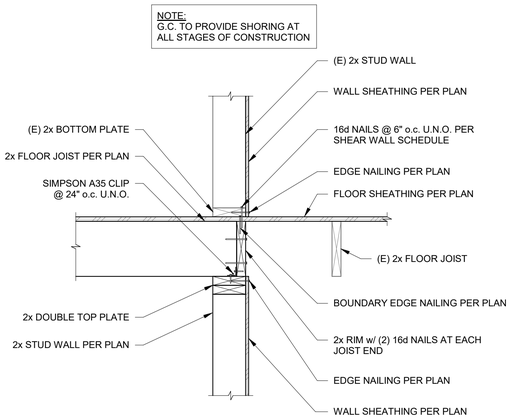

1 S5.2 SHEAR WALL AT APP BAY
1" = 1'-0"

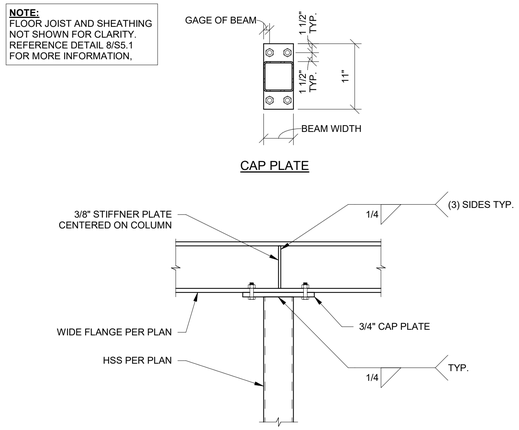

2 S5.2 WIDE FLANGE BEAM TO HSS ATTACHMENT
1" = 1'-0"

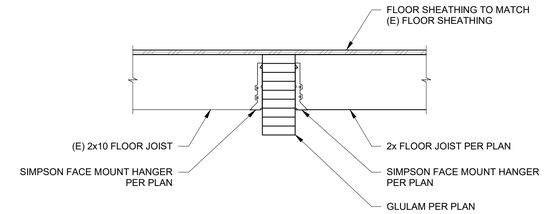

3 S5.2 FLOOR JOIST AT (N) BEAM
1" = 1'-0"

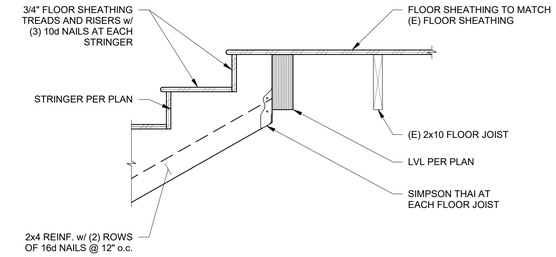

4 S5.2 STAIR STRINGER AT FLOOR
1" = 1'-0"

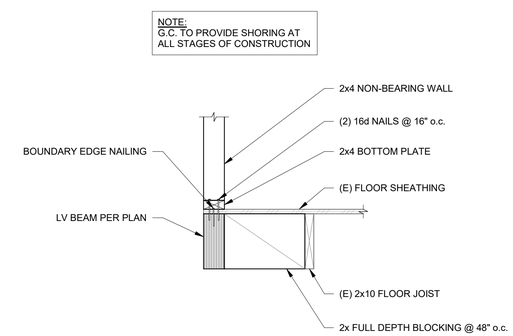

5 S5.2 STAIR OPEN FRAMING
1" = 1'-0"

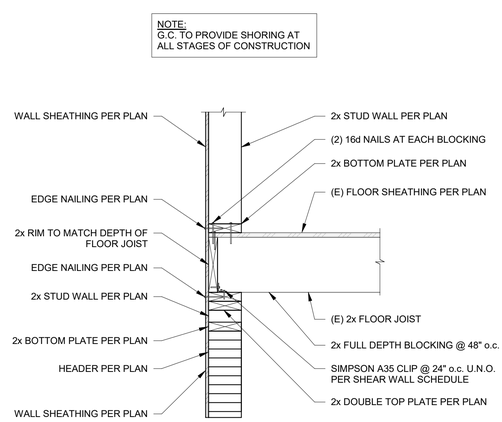

6 S5.2 FLOOR FRAMING PERPENDICULAR
1" = 1'-0"

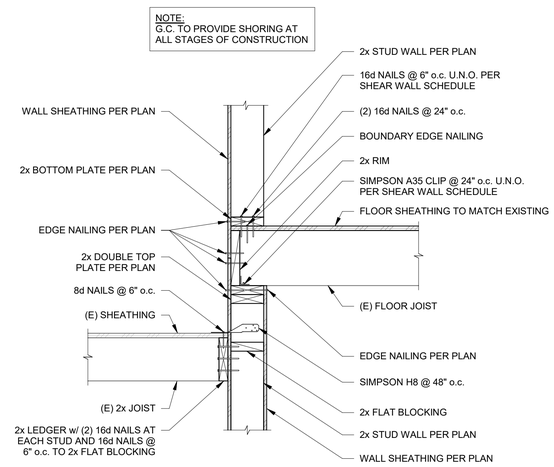

7 S5.2 SHEAR WALL AT LVL RIM
1" = 1'-0"

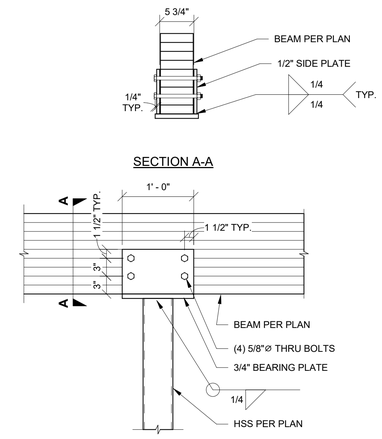

8 S5.2 HSS ATTACHMENT TO GLULAM
1" = 1'-0"

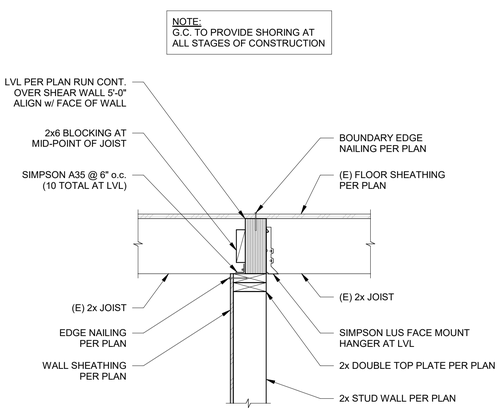

9 S5.2 LVL BEAM AT SHEAR WALL
1" = 1'-0"

ONE INCH EQUALS FULL SCALE 4/21/2023 10:45:19 AM

ZCS ENGINEERING ARCHITECTURE
127 NW D Street, Grants Pass, Oregon 97526 | 541-479-3865

REEDSPORT FIRE DISTRICT
124 N 4TH ST.
REEDSPORT, OR 97467

REEDSPORT FIRE STATION 7

STRUCTURAL REGISTERED PROFESSIONAL ENGINEER 70895 OREGON JULY 08, 2014 MATTHEW R. SMITH
EXPIRES: 06-30-24

△	DATE:	Description

PROJECT NO.	G-1468-21
DRAWN:	PWR
CHECKED:	MRS
DATE:	01-24-23

FLOOR FRAMING DETAILS

S5.2

95% CONSTRUCTION DOCUMENTS | BID / PERMIT SET

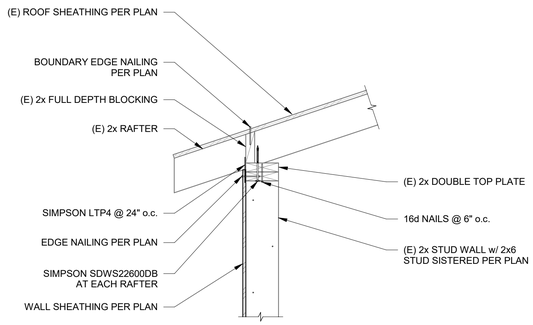

1 S6.1 EXTERIOR SHEAR WALL AT RAFTERS
1" = 1'-0"

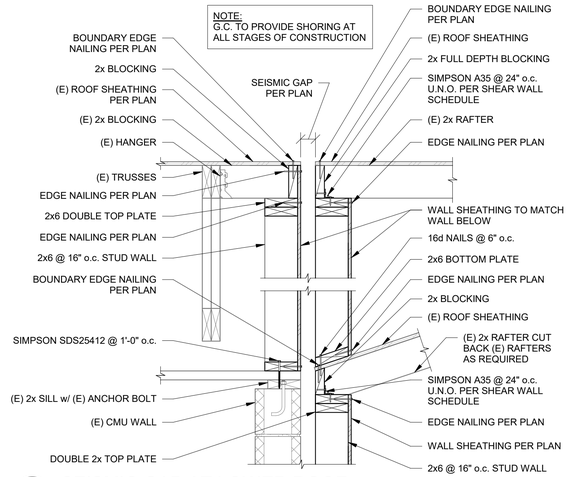

2 S6.1 SEISMIC GAP AT LOWER ROOF
1" = 1'-0"

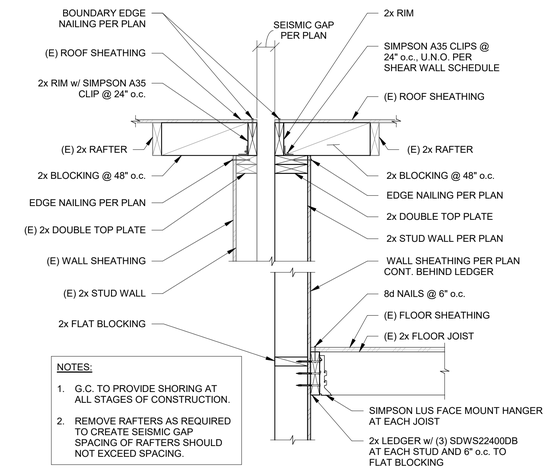

3 S6.1 SEISMIC GAP AT PARALLEL RAFTERS
1" = 1'-0"

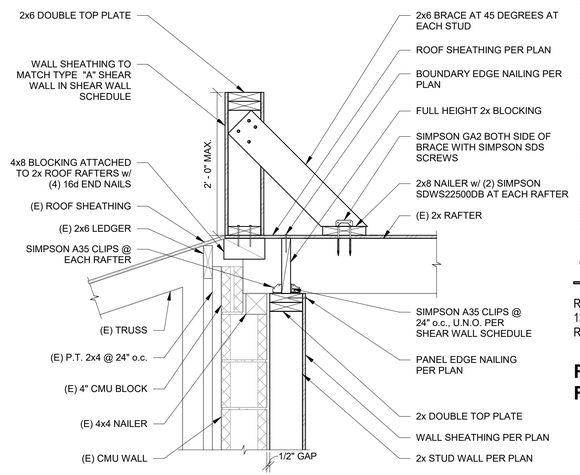

4 S6.1 ROOF ATTACHMENT AT ADJACENT STRUCTURE
1" = 1'-0"

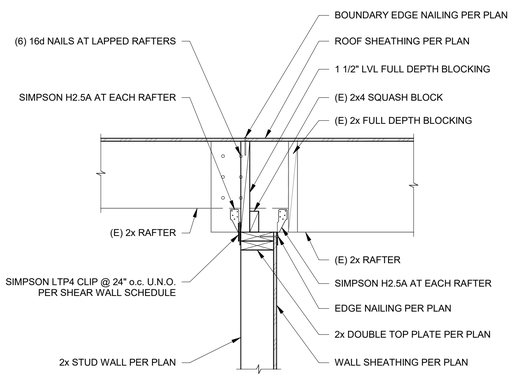

5 S6.1 INTERIOR SHEAR WALL AT SECOND FLOOR
1" = 1'-0"

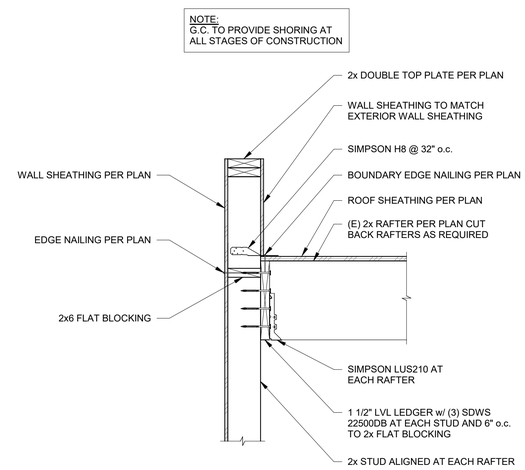

6 S6.1 UPPER ROOF PARAPET AT PERP. RAFTER
1" = 1'-0"

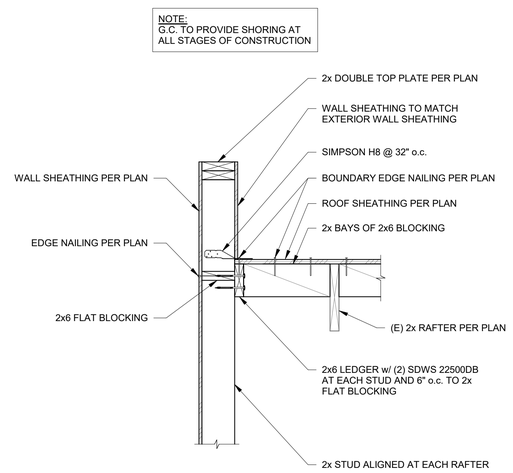

7 S6.1 UPPER ROOF PARAPET AT PARALLEL RAFTER
1" = 1'-0"

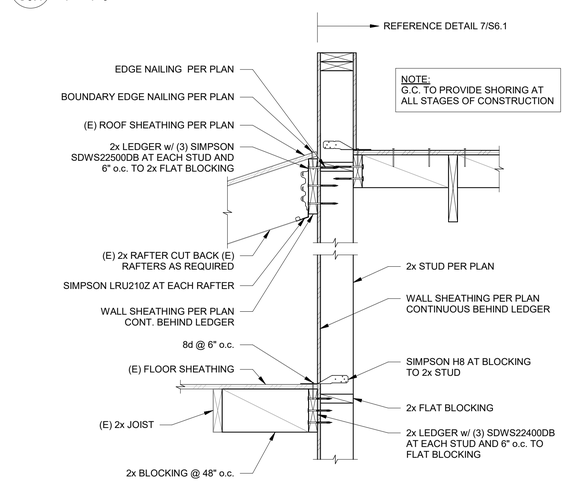

8 S6.1 LOWER ROOF FRAMING AT PARAPET
1" = 1'-0"

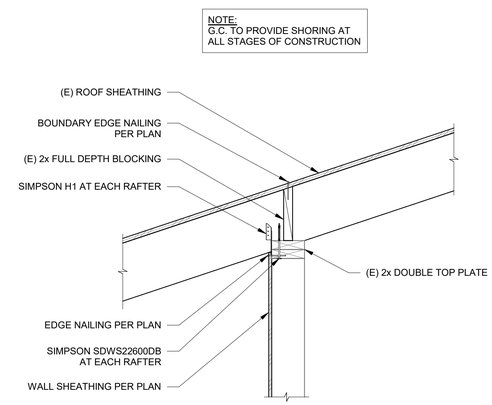

9 S6.1 INTERIOR SHEAR WALL AT PERP. FRAMING
1" = 1'-0"

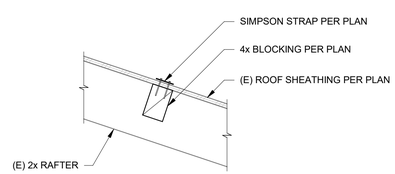

10 S6.1 ROOF STRAP AND BLOCKING
1" = 1'-0"

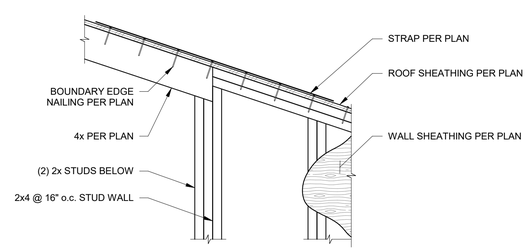

11 S6.1 BEAM ALIGNED AT SHEAR WALL
1" = 1'-0"

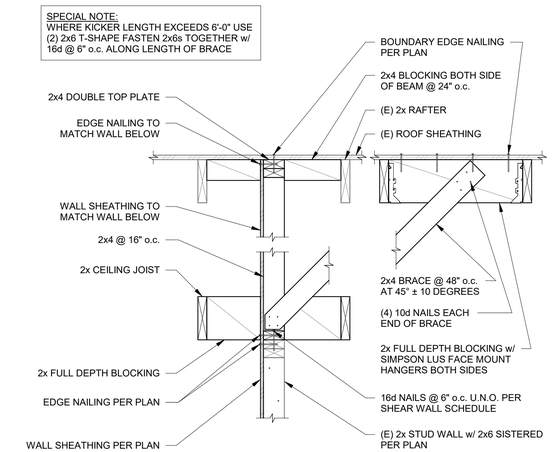

12 S6.1 PARALLEL SHEAR WALL TO ROOF FRAMING
1" = 1'-0"

ZCS ENGINEERING ARCHITECTURE
127 NW D Street, Grants Pass, Oregon 97526 | 541-479-3865

REEDSPORT FIRE DISTRICT
124 N 4TH ST.
REEDSPORT, OR 97467

REEDSPORT FIRE STATION 7

REEDSPORT FIRE DEPT. VOLUNTEER

STRUCTURAL REGISTERED PROFESSIONAL ENGINEER 70883 MATTHEW R. SMITH
EXPIRES: 06-30-24

△	DATE:	Description

PROJECT NO.	G-1468-21
DRAWN:	PWR
CHECKED:	MRS
DATE:	01-24-23

ROOF FRAMING DETAILS

S6.1

95% CONSTRUCTION DOCUMENTS | BID / PERMIT SET

ONE INCH EQUALS FULL SCALE 4/21/2023 10:45:20 AM

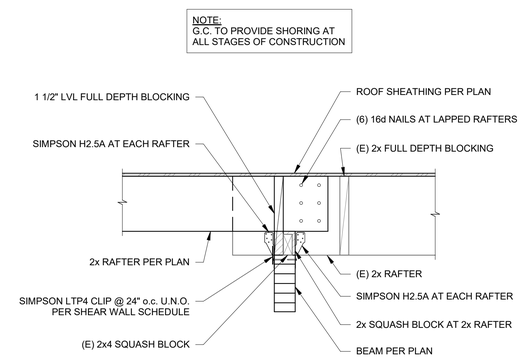

1 S6.2 (E) RAFTERS ATTACH AT ROOF BEAMS
1" = 1'-0"

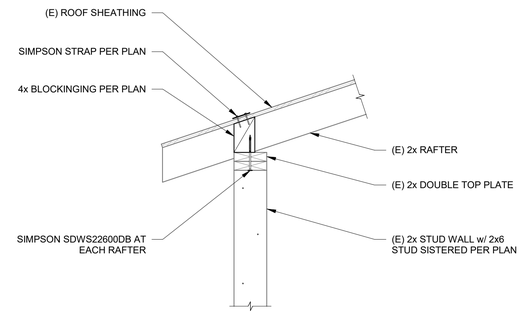

2 S6.2 STRAPPING AND BLOCKING AT EXTERIOR WALL
1" = 1'-0"

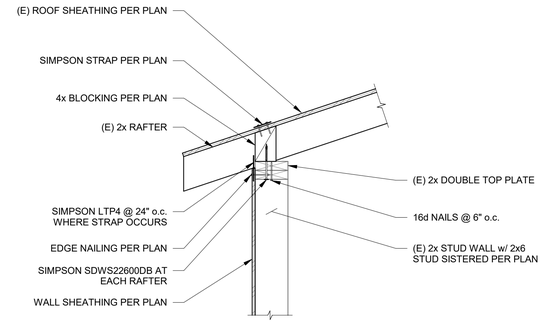

3 S6.2 EXTERIOR SHEAR WALL AT STRAP
1" = 1'-0"

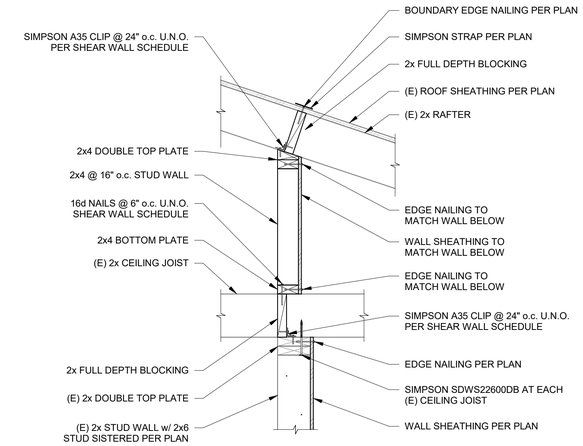

4 S6.2 SHEAR WALL AT OFFSET EXTERIOR WALL
1" = 1'-0"

ZCS ENGINEERING ARCHITECTURE
127 NW D Street, Grants Pass, Oregon 97526 | 541-479-3865

REEDSPORT FIRE DISTRICT
124 N 4TH ST.
REEDSPORT, OR 97467

REEDSPORT FIRE STATION 7

NOTES:
1. G.C. TO PROVIDE SHORING AT ALL STAGES OF CONSTRUCTION.
2. REMOVE RAFTERS AS REQUIRED TO CREATE SEISMIC GAP SPACING OF RAFTERS SHOULD NOT EXCEED SPACING.

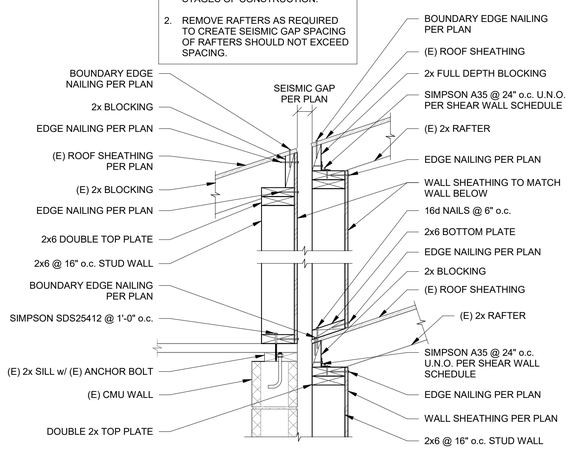

5 S6.2 SEISMIC GAP AT LOWER ROOF
1" = 1'-0"

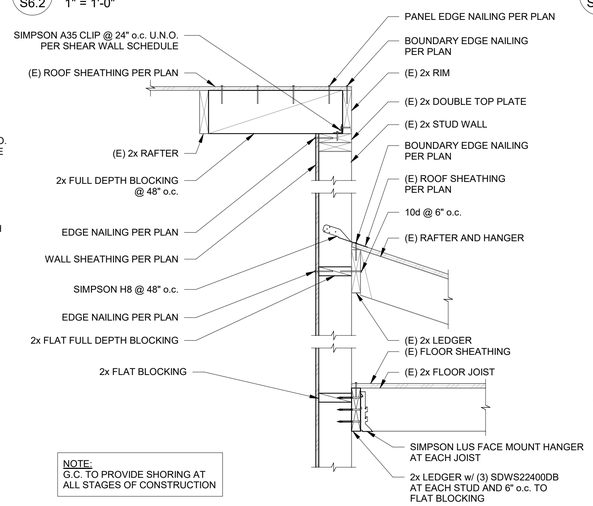

6 S6.2 SHEAR WALL AT ROOF STEP
1" = 1'-0"

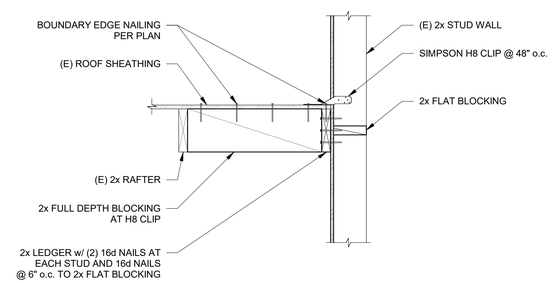

7 S6.2 LOWER ROOF ATTACHMENT AT WALL
1" = 1'-0"

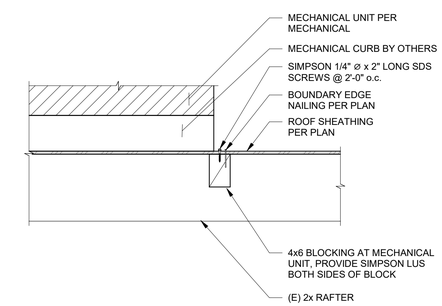

8 S6.2 MECHANICAL UNIT AT PERP. FRAMING
1" = 1'-0"

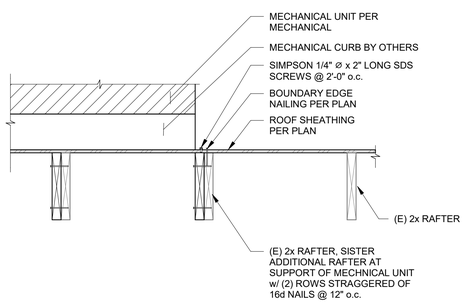

9 S6.2 MECHANICAL UNIT AT PARALLEL FRAMING
1" = 1'-0"

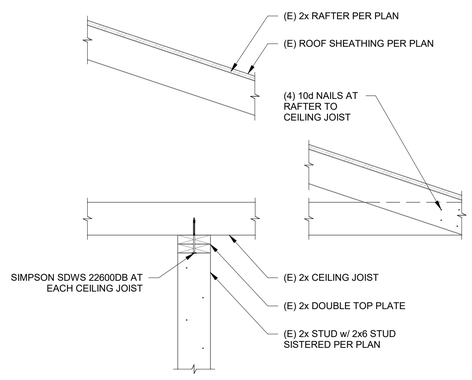

10 S6.2 EXTERIOR WALL ATTACHMENT TO CEILING JOIST
1" = 1'-0"

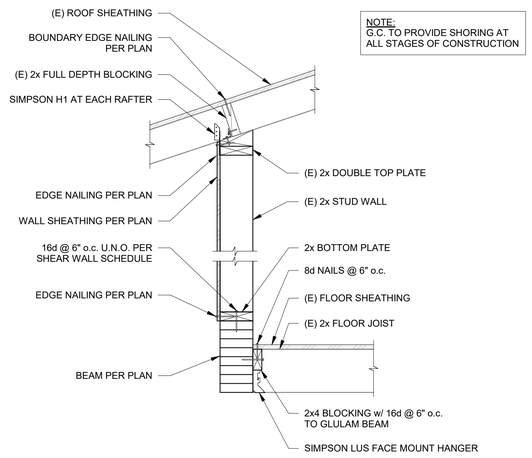

11 S6.2 SHEAR WALL AT GLULAM BEAM
1" = 1'-0"

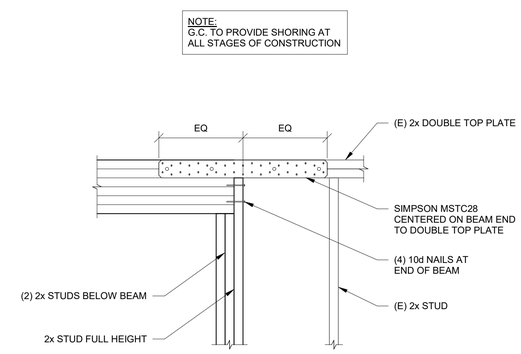

12 S6.2 DROPPED BEAM POCKET
1" = 1'-0"

STRUCTURAL REGISTERED PROFESSIONAL ENGINEER 70882 MATTHEW R. SMITH MAY 08, 2014
EXPIRES: 06-30-24

△	DATE:	Description

PROJECT NO.	G-1468-21
DRAWN:	PWR
CHECKED:	MRS
DATE:	01-24-23

ROOF FRAMING DETAILS

S6.2

95% CONSTRUCTION DOCUMENTS | BID / PERMIT SET

ONE INCH EQUALS FULL SCALE 4/21/2023 10:45:20 AM

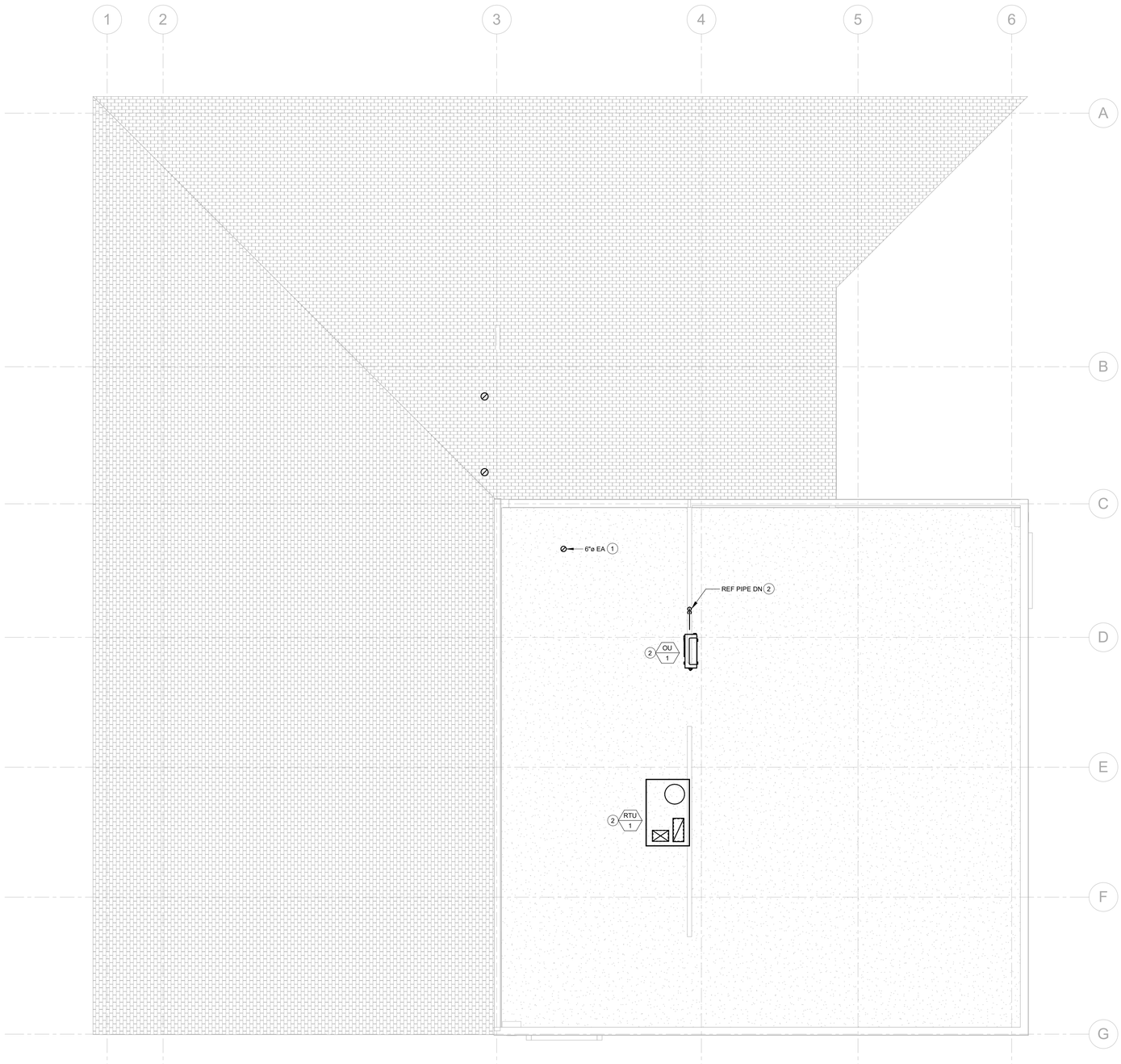

1 M1.3 MECHANICAL HVAC PLAN - ROOF
3/16" = 1'-0"

N

GENERAL NOTES

A. REFER TO M0.1 FOR GENERAL NOTES & SYMBOLS.

B. REFER TO M2.1 FOR MECHANICAL DETAILS.

C. REFER TO M3.1 FOR CONTROLS SEQUENCES AND DIAGRAMS.

D. REFER TO M4.1 AND M4.2 FOR MECHANICAL SCHEDULES.

E. BRANCH DUCT SIZES TO AIR TERMINALS SHALL MATCH NECK SIZE OF GRILLE, REGISTER, OR DIFFUSER UNLESS NOTED OTHERWISE.

F. MAXIMUM FLEXIBLE DUCT LENGTH TO DIFFUSERS SHALL BE 60", WITH MAXIMUM OF ONE 90 DEGREE ELBOW.

G. REFRIGERANT PIPING SHOWN IS TO ILLUSTRATE PREFERRED ROUTING. REFER TO MANUFACTURER'S INSTALLATION INSTRUCTIONS FOR PIPE SIZING.

KEYNOTES (#)

1 TERMINATE EXHAUST DUCT WITH ROOF CAP.

2 ITEM(S) PART OF REMODEL SCOPE OF WORK AND NOT RELATED TO THE SEISMIC RETROFIT. ALL BIDS SHALL CONTAIN SEPARATE LINE ITEM PRICING WHICH DISTINGUISHES REMODEL SCOPE OF WORK FROM SEISMIC RETROFIT SCOPE OF WORK.

ZCS ENGINEERING ARCHITECTURE
127 NW D Street, Grants Pass, Oregon 97526 | 541-479-3865

REEDSPORT FIRE DISTRICT
124 N 4TH ST.
REEDSPORT, OR 97467

REEDSPORT FIRE STATION 7

KCL ENGINEERING
199 E 5th Ave, Suite 35
Eugene, OR
97401
503-212-4612

REGISTERED PROFESSIONAL ENGINEER
#86664
OREGON
MAR 8, 2022
CHARLES WHITE
EXPIRES: 6/30/2024

△	DATE:	Description

PROJECT NO.	G-1468-21
DRAWN:	JDH
CHECKED:	SKG
DATE:	01-26-23

MECHANICAL
HVAC PLAN - ROOF

M1.3

100% CONSTRUCTION DOCUMENTS | BID / PERMIT SET

ONE INCH EQUALS FULL SCALE 4/26/2023 1:03:04 AM

DUCT INSULATION SCHEDULE

DUCT TYPE	HVAC EQUIPMENT	DUCT DETAILS	PRESSURE CLASS	INSULATION TYPE	INSULATION THICKNESS
SUPPLY AIR & VENTILATION AIR DUCT	FROM ROOF TOP UNITS	RECTANGULAR GALVANIZED STEEL	+2 INCH WG	LINED	1 INCH
		EXPOSED SPIRAL / OVAL GALVANIZED STEEL	+2 INCH WG	DOUBLE WALL INSULATED	1 INCH
		SPIRAL / OVAL GALVANIZED STEEL	+2 INCH WG	WRAPPED MINERAL FIBER	1-1/2 INCH
RETURN AIR DUCT	TO ROOF TOP UNITS	RECTANGULAR GALVANIZED STEEL	-2 INCH WG	LINED	1 INCH
		EXPOSED SPIRAL / OVAL GALVANIZED STEEL	-2 INCH WG	DOUBLE WALL INSULATED	1 INCH
		SPIRAL / OVAL GALVANIZED STEEL	-2 INCH WG	WRAPPED MINERAL FIBER	1-1/2 INCH
EXHAUST AIR DUCT	FROM EXHAUST FANS	NA	NA	NA	NA
FLEXIBLE DUCTS (UL-181, CLASS 1)	TO DIFFUSERS	2-PLY VINYL, HELICAL STEEL WIRE W/VAPOR BARRIER	+1" INCH WG	FIBROUS-GLASS INSULATION (R-6)	1-3/4 INCH

NOTES:

1. ALL DUCTWORK SHALL BE CONSTRUCTED AND ERECTED IN ACCORDANCE WITH 2019 OREGON MECHANICAL SPECIALTY CODE.

STATION 7 VENTILATION SCHEDULE

PRIMARY EQUIPMENT	ROOM NAME	OCCUPANCY CATEGORY	ZONE FLOOR AREA (SF) (AZ)	OCCUPANT DENSITY (PEOPLE/1000SF)	DEFAULT OCCUPANCY (PEOPLE)	DESIGN OCCUPANCY* (PEOPLE)	PEOPLE OUDOOR AIRFLOW RATE IN BREATHING ZONE (RP CFM/PERSON)	AREA OUTDOOR AIRFLOW RATE IN BREATHING ZONE (RA CFM/SF)	TOTAL OUTDOOR AIRFLOW RATE IN BREATHING ZONE (CFM) (VBZ)	ZONE AIR DISTRIBUTION EFFECTIVENESS (EZ)	ZONE OUTDOOR AIRFLOW RATE (CFM) (VOZ)	ZONE PRIMARY AIRFLOW RATE (CFM) (VPZ)	ZONE PRIMARY OUTDOOR AIR FRACTION (ZP)
RTU-1	BREAK 105	Office space	203	5	1.0	1	5	0.06	17.18	0.8	21.5	100	0.21
	CORRIDOR 122	Corridors	191	0	0.0	0	0	0.06	11.46	0.8	14.3	50	0.29
	2ND FLOOR CORRIDORS	Corridors	206	0	0.0	0	0	0.06	12.36	0.8	15.5	130	0.12
	STORAGE 204	Storage rooms	118	0	0.0	0	0	0.12	14.16	1.8	7.9	50	0.16
	STORAGE 205	Storage rooms	118	0	0.0	0	0	0.12	14.16	2.8	5.1	50	0.10
	CONFERENCE	Conference/meeting	1446	50	72.3	73	5	0.06	451.76	3.8	118.9	1315	0.09
					SYSTEM...	73						MAX ZP=	0.29
					OCCUPANT...	1.0						SYSTEM VENTILATION EFFICIENCY EV=	0.8
											SYSTEM OUTDOOR AIR INTAKE FLOW RATE (CFM)		
											VOU=D*∑ALL ZONESRPPZ+∑ALL ZONESRAAZ		516.08
											VOT=VOU/EV		650
UNOCCUPIED	RESTROOM 109	Bathrooms/toilet-private	48	0	0.0	0	0	0	0	1	0	N/A	N/A
	RESTROOM 103	Bathrooms/toilet-private	92	0	0.0	0	0	0	0	1	0	N/A	N/A
	SERVER 104	Unoccupied	70	0	0.0	0	0	0	0	1	0	N/A	N/A
	APP BAY 101	Unoccupied	1129	0	0.0	0	0	0	0	1	0	N/A	N/A
	EVIDENCE PREP. 121	Unoccupied	71	0	0.0	0	0	0	0	2	0	N/A	N/A
	EVIDENCE 102	Unoccupied	177	0	0.0	0	0	0	0	3	0	N/A	N/A
	RESTROOM 203	Bathrooms/toilet-private	74	0	0.0	0	0	0	0	1	0	N/A	N/A

NOTE:
THIS CALCULATION IS BASED ON CHAPTER 4 OF THE IMC, SECTION 403.3.1.1.2.3 FOR MULTIPLE ZONE RECIRCULATING SYSTEMS

GRILLES REGISTERS AND DIFFUSERS SCHEDULE

REFERENCE	MATERIAL	MARGIN (IN)	INLET (IN)	FACE (IN)	DAMPER	MFR	MODEL	NOTES
CD-1 (CEILING DIFFUSER)	STEEL	INLET + 5 9/16"	SEE DWG	12 x 12	NO	TITUS	MCD	1, 2
SG-1 (SUPPLY GRILLE)	ALUMINUM	1 1/4"	SEE DWG	INLET +1 3/4"	NO	TITUS	272FL	2, 3
RG-1 (RETURN GRILLE) EG-1 (EXHAUST GRILLE)	ALUMINIUM	1 1/4"	SEE DWG	INLET +1 3/4"	NO	TITUS	350FL	2, 3

NOTES:

1. REFER TO ARCH DRAWINGS FOR FINAL CEILING TYPE FOR MOUTING TYPE.
2. COORDINATE COLOR SELECTION WITH ARCHITECT.
3. SURFACE MOUNT.

ZCS ENGINEERING ARCHITECTURE
127 NW D Street, Grants Pass, Oregon 97526 | 541-479-3865

REEDSPORT FIRE DISTRICT
124 N 4TH ST.
REEDSPORT, OR 97467

REEDSPORT FIRE STATION 7

KCL ENGINEERING
199 E 5th Ave, Suite 35
Eugene, OR
97401
503-212-4612

REGISTERED PROFESSIONAL ENGINEER 86864 OREGON MAR 8, 2022 CHARLES WHITE

EXPIRES: 6/30/2024

△	DATE:	Description

PROJECT NO.	G-1468-21
DRAWN:	JDH
CHECKED:	SKG
DATE:	01-26-23

MECHANICAL SCHEDULES

M4.2

100% CONSTRUCTION DOCUMENTS | BID / PERMIT SET

ONE INCH EQUALS FULL SCALE

4/26/2023 1:03:06 AM

MECHANICAL - GENERAL NOTES

1. COORDINATE LOCATION/INSTALLATION OF MECHANICAL AND ELECTRICAL WORK WITH ALL OTHER TRADES. NO ASPECT OF A SYSTEM INSTALLATION OR ITS ROUGH-IN SHALL COMMENCE UNTIL PROPER AND TIMELY COORDINATION WITH ALL TRADES ASSOCIATED WITH THE INSTALLATION HAS TRANSPIRED. ITEMS TO BE COORDINATED SHALL INCLUDE BUT NOT BE LIMITED TO: BUILDING STRUCTURE, SHEET METAL, ALL PIPING SYSTEMS, LIGHT FIXTURES, CONDUITS, CABLE TRAYS, ETC. REFER TO ALL GENERAL, MECHANICAL, AND ELECTRICAL DRAWINGS AND SPECIFICATIONS FOR THIS PROJECT. ANY REWORK OF INSTALLED EQUIPMENT WILL BE AT CONTRACTORS EXPENSE.
2. INCORPORATE INTO INSTALLATION MECHANICAL SPECIFICATIONS, DRAWINGS, STATE AND LOCAL CODES, AND OTHER APPLICABLE REQUIREMENTS.
3. WARNING - CALL 48 HOURS BEFORE YOU DIG: LAW REQUIRES ANYONE DOING ANY EXCAVATION, FENCING, PLANTING OR DRILLING TO CALL 48 HOURS IN ADVANCE. HAND DIG WITHIN 18 INCHES OF ANY LOCATE MARK OR FLAG. ONE CALL 811.
4. ON COMPLETION OF THE INSTALLATION, MECHANICAL CONTRACTOR SHALL COOPERATE WITH THE OWNER TO PROVIDE ANY NECESSARY ADJUSTING AND BALANCING TO OBTAIN PROPER OPERATION OF ALL EQUIPMENT AND SYSTEMS. CONTRACTOR SHALL PROVIDE ALL FACILITIES AND EQUIPMENT, AND MAKE ALL TESTS, REQUIRED FOR ADJUSTMENTS AND BALANCING TO ESTABLISH THE PROPER PERFORMANCE OF ANY PIECE OF EQUIPMENT.
5. REFER TO ARCHITECTURAL SPECIFICATIONS FOR FIRESTOPPING AND TO ARCHITECTURAL CODE PLAN FOR FIRE RATED WALLS AND FLOORS. EACH TRADE IS RESPONSIBLE TO FIRESTOP PENETRATIONS THROUGH RATED ASSEMBLIES.
6. EACH TRADE IS RESPONSIBLE TO MAKE PENETRATIONS WHERE REQUIRED IN EXISTING WALLS, FLOORS, AND CEILINGS. PENETRATIONS SHALL BE NEAT. ANY OVERCUT SHALL BE CONCEALED OR CAULKED.
7. ALL EXPOSED WALL PENETRATIONS SHALL BE COVERED BY ESCUTCHEONS OR SHEET METAL AS APPROPRIATE.
8. ALL CONCEALED AND EXPOSED PIPING AND DUCT WALL PENETRATIONS SHALL BE CAULKED TO PREVENT NOISE TRANSFER BETWEEN SPACES.
9. CONTRACTOR SHALL BE RESPONSIBLE TO CREATE NECESSARY OPENINGS TO THE BUILDING TO REMOVE EXISTING ITEMS AND TO BRING IN NEW EQUIPMENT. ALL OPENINGS CREATED SHALL BE PATCHED AND FINISHED WITH MATERIALS TO MATCH EXISTING CONDITIONS. NO ADDITIONAL COMPENSATION WILL BE ALLOWED FOR THIS WORK.
10. MECHANICAL CONTRACTOR SHALL WARRANT ALL EQUIPMENT AND INSTALLATION PER THE CONTRACT DOCUMENTS.

MECHANICAL – DEMOLITION NOTES

1. MECHANICAL DEMOLITION DRAWINGS SHOWING EXISTING CONDITIONS HAVE BEEN PREPARED BASED ON FIELD OBSERVATION AND ORIGINAL DRAWINGS. ADDITIONAL COMPONENTS MAY EXIST, WHICH MAY NOT BE SHOWN, AND SUCH ITEMS SHALL BE DEALT WITH IN A MANNER SIMILAR TO THOSE ITEMS WHICH DO SHOW. CONTRACTOR SHALL VISIT THE SITE AND BECOME FAMILIAR WITH EXISTING CONDITIONS.
2. CONTRACTOR SHALL THOROUGHLY FAMILIARIZE HIMSELF WITH EXISTING MECHANICAL SYSTEMS WHICH WILL BE AFFECTED BY THE DEMOLITION WORK. CONTRACTOR SHALL OBTAIN PERMISSION FROM OWNER'S REPRESENTATIVE TO SHUT OFF SERVICES OR SYSTEMS WHICH MAY AFFECT OTHER AREAS BEYOND THE LIMITS OF THE IMMEDIATE DEMOLITION AREA. SUCH PERMISSION WILL BE GRANTED ONLY AFTER OWNER'S REPRESENTATIVE IS INFORMED OF THE REASON FOR AND DURATION OF THE SHUTDOWN AND IS SATISFIED THAT THE SHUTDOWN CAN BE MADE WITH AS LITTLE INCONVENIENCE TO OTHER AREAS AS POSSIBLE.
3. PIPING, HANGERS, DUCTWORK, GRILLES, REGISTERS, DIFFUSERS, ETC., SHOWN ON PLANS SHALL BE REMOVED UNLESS NOTED OTHERWISE. REMOVAL SHALL BE DONE IN A TIMELY MANNER IN ACCORDANCE WITH THE GENERAL DEMOLITION WORK. COORDINATE WITH THE OWNER AND OTHER CONTRACTORS.
4. EQUIPMENT AND/OR MATERIALS SCHEDULED FOR ABANDONMENT AND REMOVAL ARE TO BECOME CONTRACTOR'S SALVAGE AND SHALL BE HAULED AWAY FROM THE SITE PROMPTLY. EXCEPTION SHALL BE THE EQUIPMENT LISTED FOR DISTRICT SALVAGE.
5. REMOVE ALL ABANDONED PIPING AND DUCTWORK. REFER TO ARCH PLANS FOR CEILINGS TO BE REMOVED.
6. CONTRACTOR SHALL BE RESPONSIBLE FOR ALL COSTS ASSOCIATED WITH REPAIR OR REPLACEMENT OF TELECOMMUNICATIONS FACILITIES OR EQUIPMENT FOUND TO BE DAMAGED OR NON-FUNCTIONAL AFTER SUBSTANTIAL COMPLETION.

HVAC - NOTES

1. CONTRACTOR TO COORDINATE INSTALLATION WITH ALL OTHER TRADES AS DESCRIBED IN MECHANICAL GENERAL NOTE #1.
2. MECHANICAL CONTRACTOR TO PROVIDE A COMPLETE HVAC SYSTEM, INCLUDING SUPPLY, RETURN, EXHAUST, AND VENTILATION DUCTWORK, MECHANICAL EQUIPMENT, SUPPORTS, HANGERS, DIFFUSERS, GRILLES, REGISTERS, AND ALL APPURTENANCES. INSTALL ALL EQUIPMENT PER MANUFACTURER'S RECOMMENDATIONS. INSTALL SYSTEM TO MEET ALL CITY AND STATE CODES AND REQUIREMENTS.
3. DRAWING PLANS, SCHEMATICS, AND DIAGRAMS INDICATE GENERAL LOCATION AND ARRANGEMENT OF DUCT SYSTEM. INDICATED DUCT LOCATIONS, CONFIGURATIONS, AND ARRANGEMENTS WERE USED TO SIZE DUCTS AND CALCULATE FRICTION LOSS FOR AIR-HANDLING EQUIPMENT SIZING AND FOR OTHER DESIGN CONSIDERATIONS. INSTALL DUCT SYSTEMS AS INDICATED UNLESS DEVIATIONS TO LAYOUT ARE APPROVED ON SHOP DRAWINGS AND COORDINATION DRAWINGS.
4. ALL DUCT DIMENSIONS LISTED ARE INTERIOR FREE AREA DUCT DIMENSIONS AND DO NOT INCLUDE INSULATION REQUIREMENTS.
5. CONTRACTOR TO SEAL ALL WALL DUCT PENETRATIONS. PROVIDE FIRE CAULKING ASSEMBLIES FOR PENETRATIONS OF RATED WALLS. REFER TO ARCHITECTURAL DRAWINGS FOR WALL RATINGS. DUCT INSULATION TO CONTINUE THRU WALL PENETRATIONS UNBROKEN, EXCEPT WHERE FIRE OR FIRE/SMOKE DAMPERS ARE INSTALLED. SEAL AROUND DUCT INSULATION AT WALL PENETRATIONS.

PLUMBING - NOTES

1. CONTRACTOR TO COORDINATE INSTALLATION WITH ALL OTHER TRADES AS DESCRIBED IN MECHANICAL GENERAL NOTE #1.
2. CONTRACTOR TO PROVIDE A COMPLETE PLUMBING SYSTEM, INCLUDING, PIPE, INSULATION, HANGERS, SUPPORTS, EQUIPMENT, WATER HEATERS, FIXTURES, MIXING VALVES, VALVES, AND ALL APPURTENANCES. INSTALL ALL EQUIPMENT PER MANUFACTURER'S RECOMMENDATIONS. SIZE AND INSTALL PLUMBING SYSTEM PER PLUMBING CODE. COMPLY WITH ALL LOCAL AND STATE CODES AND REQUIREMENTS.
3. DRAWING PLANS, SCHEMATICS, AND DIAGRAMS INDICATE GENERAL LOCATION AND ARRANGEMENT OF PLUMBING SYSTEM.
4. EXISTING PIPING AND EQUIPMENT LOCATIONS SHOWN ARE BASED ON ORIGINAL DRAWINGS. CONTRACTOR IS RESPONSIBLE FOR LOCATING PIPING UNDER GROUND OR IN WALLS/CHASES WHERE WORK IS REQUIRED.
5. CONTRACTOR TO SEAL ALL WALL PIPE PENETRATIONS. PROVIDE FIRE CAULKING ASSEMBLY FOR PENETRATIONS OF FIRE RATED WALLS. REFER TO ARCHITECTURAL DRAWINGS FOR WALL RATINGS. PIPE INSULATION TO CONTINUE THRU WALL PENETRATIONS UNBROKEN. SEAL AROUND PIPE INSULATION AT WALL PENETRATIONS.
6. CONTRACTOR TO VERIFY WITH ENGINEER FOR ANY FIXTURES NOT TAGGED OR PIPED PRIOR TO ANY WORK. CONTRACTOR IS RESPONSIBLE FOR ALL PLUMBING FIXTURES SHOWN ON ARCHITECTURAL DRAWINGS; TAGGED OR NOT TAGGED ON PLUMBING / MECHANICAL DRAWINGS UNLESS SPECIFICALLY NOTED AS EXCLUDED FROM SCOPE.

MECHANICAL ABBREVIATIONS

ABSOR	ABSORPTION	FS	FLOOR SINK
ACU	AIR CONDITIONING UNIT	FT	FINTUBE
AD	ACCESS DOOR OR AREA DRAIN	FTG	FOOTING
AFF	ABOVE FINISHED FLOOR	GA	GAGE
AFG	ABOVE FINISHED GRADE	GAL	GALLON
AHU	AIR HANDLING UNIT	GALV	GALVANIZED
AV	AIR VENT	GC	GENERAL CONTRACTOR
BOT	BOTTOM	GW	GREASE WASTE
BTU	BRITISH THERMAL UNIT	GPH	GALLONS PER HOUR
BTUH	BTU PER HOUR	GPM	GALLONS PER MINUTE
BV	BALL VALVE	HR	HOUR
CA	COMPRESSED AIR	HTG	HEATING
CB	CATCH BASIN	HB	HOSE BIBB
CENT	CENTRIFUGAL	ISP	INTERNAL STATIC PRESSURE
CFM	CUBIC FEET PER MINUTE	JR	JANITOR RECEPTOR
CI	CAST IRON	LAV	LAVATORY
CL	CENTER LINE	LDBT	LEAVING DRY BULB TEMPERATURE
COND	CONDENSATE		
CO	CLEAN OUT	LWT	LEAVING WATER TEMPERATURE
CONC	CONCRETE		
CONTR	CONTRACTOR	LWBT	LEAVING WET BULB TEMPERATURE
CP	CONDENSATE PUMP/CIRC. PUMP		
CU	COPPER	MB	MOP BASIN
CUH	CABINET UNIT HEATER	MBH	1000 BTUH
CWP	CIRCULATING WATER PUMP	MC	MECHANICAL CONTRACTOR
DDC	DIRECT DIGITAL CONTROLS	MECH	MECHANICAL
DN	DOWN	MH	MANHOLE
DR	DRAIN	NTS	NOT TO SCALE
DS	DOWNSPOUT	OA	OUTSIDE AIR
EA	EXHAUST AIR	OD	OVERFLOW ROOF DRAIN
EAT	EXHAUST AIR TEMPERATURE	PSI	POUNDS PER SQUARE INCH
EC	ELECTRICAL CONTRACTOR	PRV	POWER ROOF VENTILATOR
EDBT	ENTERING DRY BULB TEMPERATURE	PRV	PRESSURE REDUCING VALVE
		PV	PRESSURE VENT
EEW	EMERGENCY EYE WASH	PVC	POLYVINYL CHLORIDE
EF	EXHAUST FAN	RA	RETURN AIR
EJ	EXPANSION JOINT	RD	ROOF DRAIN
EQUIP	EQUIPMENT	RH	RELATIVE HUMIDITY
ESE	EMERGENCY SHOWER/EYEWASH	RTU	ROOF TOP UNIT
EST	EXTERNAL STATIC PRESSURE	RV	RELIEF VALVE
EWBT	ENTERING WET BULB TEMPERATURE	RVT	ROOF VENT TERMINATION
		SK	SINK
EWC	ELECTRIC WATER COOLER	SA	SUPPLY AIR
EWT	ENTERING WATER TEMPERATURE	SH	SHOWER
		SO	STORM OVERFLOW
EX	EXISTING	ST	STORM
EXH	EXHAUST	TCC	TEMPERATURE CONTROL CONTRACTOR
EXP	EXPANSION		
FAI	FRESH AIR INTAKE	TYP	TYPICAL
FCU	FAN COIL UNIT	UH	UNIT HEATER
FD	FLOOR DRAIN	UR	URINAL
FDC	FIRE DEPARTMENT CONNECTION	UV	UNIT VENTILATOR
FLEX	FLEXIBLE	VA	VENTILATION AIR
FLR	FLOOR	VTR	VENT THROUGH ROOF
FPM	FEET PER MINUTE	WB	WALL BOX – CONDENSATE
FPS	FEET PER SECOND	WC	WATER CLOSET
		WH	WATER HEATER

PIPING LEGEND - PLUMBING

CW	DOMESTIC COLD WATER
HW	DOMESTIC HOT WATER
LP	PROPANE
SAN	SANITARY
P	TRAP PRIMER
V	VENT

PLUMBING ACCESSORY LEGEND

CO	CLEAN OUT
FCO	FLOOR CLEAN OUT
FD	FLOOR DRAIN
VTR	VENT THRU ROOF (X DENOTES IDENTIFICATION)
	BACKFLOW PREVENTER

GENERAL SYMBOLS

	EXISTING = HALFTONE LINEWORK
	NEW = DARK LINEWORK
	DEMO = DASHED DARK LINEWORK
	BELOW GRADE = LONG DASHED DARK LINEWORK
	NEW CONNECTION POINT
	POINT OF DISCONNECT
#	KEYNOTE
XXX / X	EQUIPMENT IDENTIFICATION TAG
1 A101 SIM	DETAIL DRAWING REFERENCE TAG, SIM-SIMILAR, TYP-TYPICAL, OPP-OPPOSITE SHEET REFERENCE
1 A101 SIM	SECTION CUT REFERENCE TAG, SIM-SIMILAR, TYP-TYPICAL, OPP-OPPOSITE SHEET REFERENCE

H.V.A.C. / DUCTWORK SYMBOLS

RECT.	RND.	OVAL	
			SUPPLY (SA), OUTSIDE (OA), VENTILATION (VA) AIR DUCT (UP / DOWN / SECTION)
			RETURN (RA) AIR DUCT (UP / DOWN / SECTION)
			EXHAUST (EA) AIR DUCT (UP / DOWN / SECTION)
10/6 SA			RECTANGULAR DUCT (WIDTH / HEIGHT / SYSTEM)
	10 Ø SA		ROUND DUCT (DIAMETER / SYSTEM)
		10/6 Ø SA	FLAT OVAL DUCT (WIDTH / HEIGHT / SYSTEM)
			SUPPLY DIFFUSER
			SUPPLY REGISTER OR GRILLE
			LINEAR SLOT DIFFUSER
			RETURN REGISTER OR GRILLE
			EXHAUST REGISTER OR GRILLE
AD			DUCT ACCESS DOOR
			DUCT END CAP
			TURNING VANES
			VAV TERMINAL UNIT
			FLEXIBLE DUCTWORK
R			ELEVATION CHANGE (RISE OR DROP)
			HIGH EFF. TAKE OFF FITTING w/ VOLUME DAMPER
BD			BACKDRAFT DAMPER
			OPPOSED BLADE DAMPER
			PARALLEL BLADE DAMPER
			VOLUME CONTROL DAMPER
FD			FIRE DAMPER
SD			SMOKE DAMPER
FSD			FIRE/SMOKE DAMPER
M			MOTORIZED ACTUATOR
T			THERMOSTAT
C			CARBON MONOXIDE SENSOR
H			HUMIDISTAT
			SIDE WALL DIFFUSER
			ROUND DIFFUSER
			EXTERIOR LOUVER
X - #			FIXTURE IDENTIFICATION TAG
#x#/CFM			NECK SIZE / CFM

NOTE: ALL SYMBOLS MAY NOT APPLY TO THIS PROJECT

ZCS ENGINEERING ARCHITECTURE
127 NW D Street, Grants Pass, Oregon 97526 | 541-479-3865

REEDSPORT FIRE DISTRICT
124 N 4TH ST.
REEDSPORT, OR 97467

REEDSPORT FIRE STATION 7

KCL ENGINEERING
199 E 5th Ave, Suite 35
Eugene, OR
97401
503-212-4612

REGISTERED PROFESSIONAL ENGINEER 98664 OREGON MAR 8, 2022 CHARLES WHITE
EXPIRES: 6/30/2024

△	DATE:	Description

PROJECT NO.	G-1468-21
DRAWN:	JDH
CHECKED:	SKG
DATE:	01-26-23

MECHANICAL GENERAL NOTES & SYMBOLS

M0.1

100% CONSTRUCTION DOCUMENTS | BID / PERMIT SET

ONE INCH EQUALS FULL SCALE 4/26/2023 1:03:02 AM

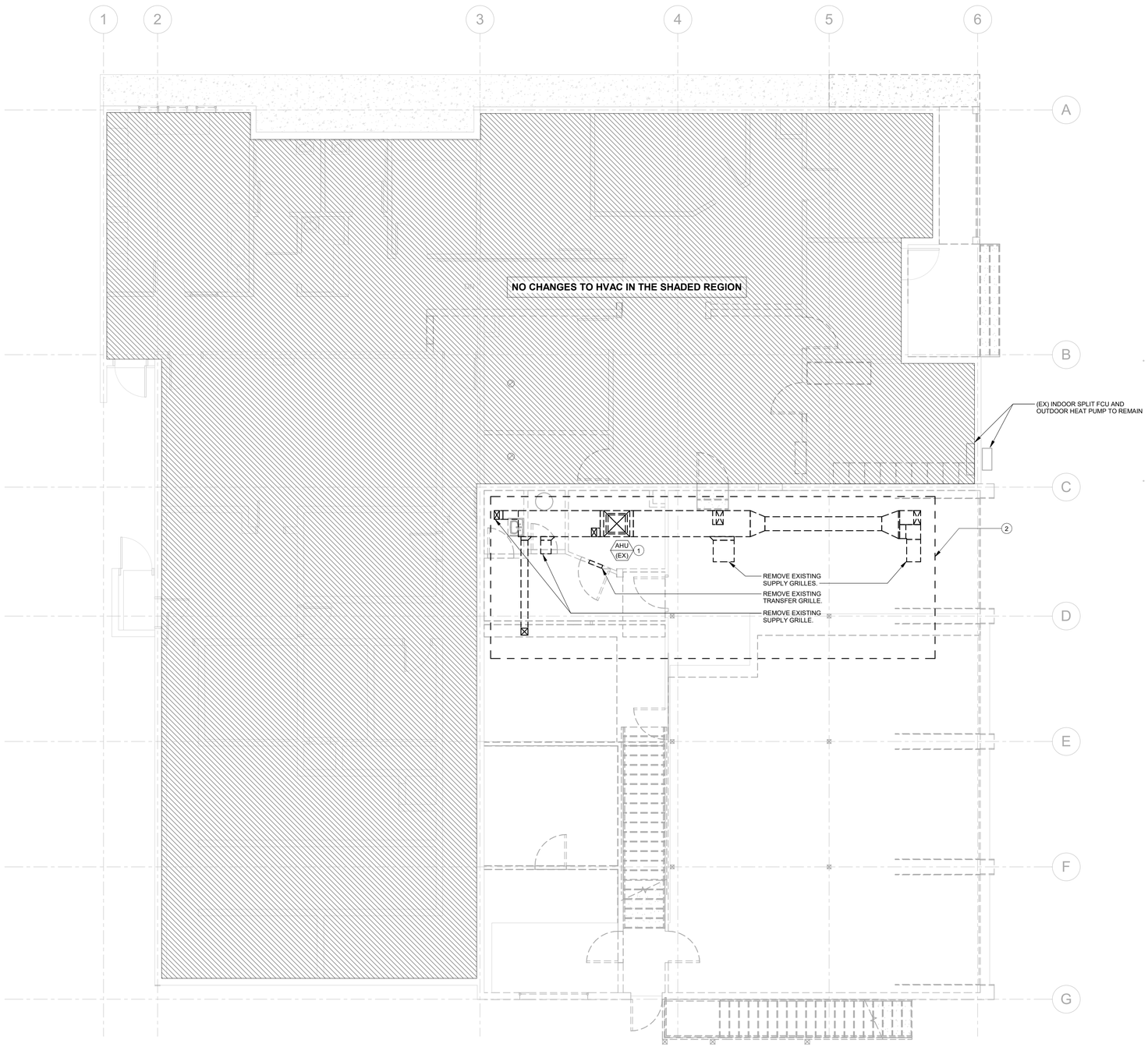

1 MD1.1 MECHANICAL HVAC DEMO - FIRST FLOOR
3/16" = 1'-0"

N

ONE INCH EQUALS FULL SCALE

4/26/2023 1:03:07 AM

GENERAL NOTES:

A. REFER TO M0.1 FOR GENERAL NOTES & SYMBOLS.

B. PATCH WALLS, ROOFS, AND/OR FLOOR WHERE DUCTS, GRILLES, PIPES, OR EQUIPMENT ARE REMOVED. PAINT OR FINISH TO MATCH ORIGINAL CONSTRUCTION.

C. WHERE DUCTWORK IS REMOVED, REMOVE ALL ASSOCIATED SUPPORTS.

D. WHERE EQUIPMENT IS REMOVED, REMOVE ALL ASSOCIATED SUPPORTS, DUCTWORK, PIPING, AND CONTROLS.

E. WHERE CONTROLS ARE REMOVED, REMOVE ALL ASSOCIATED WIRING AND/OR PNEUMATIC TUBING. PATCH WALL OPENINGS AND PAINT OR FINISH TO MATCH ORIGINAL CONSTRUCTION. IN WALLS THAT CANNOT BE PATCHED, INSTALL STAINLESS STEEL COVER PLATE. ABANDON PNEUMATIC TUBING IN WALLS. (DEMO OF CONTROLS IS OWNER'S SCOPE OF WORK.)

KEYNOTES (#)

1 REMOVE EXISTING AIR HANDLER AND ALL ASSOCIATED DUCTWORK.

2 ITEM(S) PART OF REMODEL SCOPE OF WORK AND NOT RELATED TO THE SEISMIC RETROFIT. ALL BIDS SHALL CONTAIN SEPARATE LINE ITEM PRICING WHICH DISTINGUISHES REMODEL SCOPE OF WORK FROM SEISMIC RETROFIT SCOPE OF WORK.

ZCS ENGINEERING ARCHITECTURE
127 NW D Street, Grants Pass, Oregon 97526 | 541-479-3865

REEDSPORT FIRE DISTRICT
124 N 4TH ST.
REEDSPORT, OR 97467

REEDSPORT FIRE STATION 7

KCL ENGINEERING
199 E 5th Ave, Suite 35
Eugene, OR
97401
503-212-4612

REGISTERED PROFESSIONAL ENGINEER
98664
Charles White
OREGON
MAR 8, 2022
CHARLES WHITE
EXPIRES: 6/30/2024

△	DATE:	Description

PROJECT NO.	G-1468-21
DRAWN:	JDH
CHECKED:	SKG
DATE:	01-26-23

MECHANICAL DEMOLITION - FIRST FLOOR

MD1.1

100% CONSTRUCTION DOCUMENTS | BID / PERMIT SET

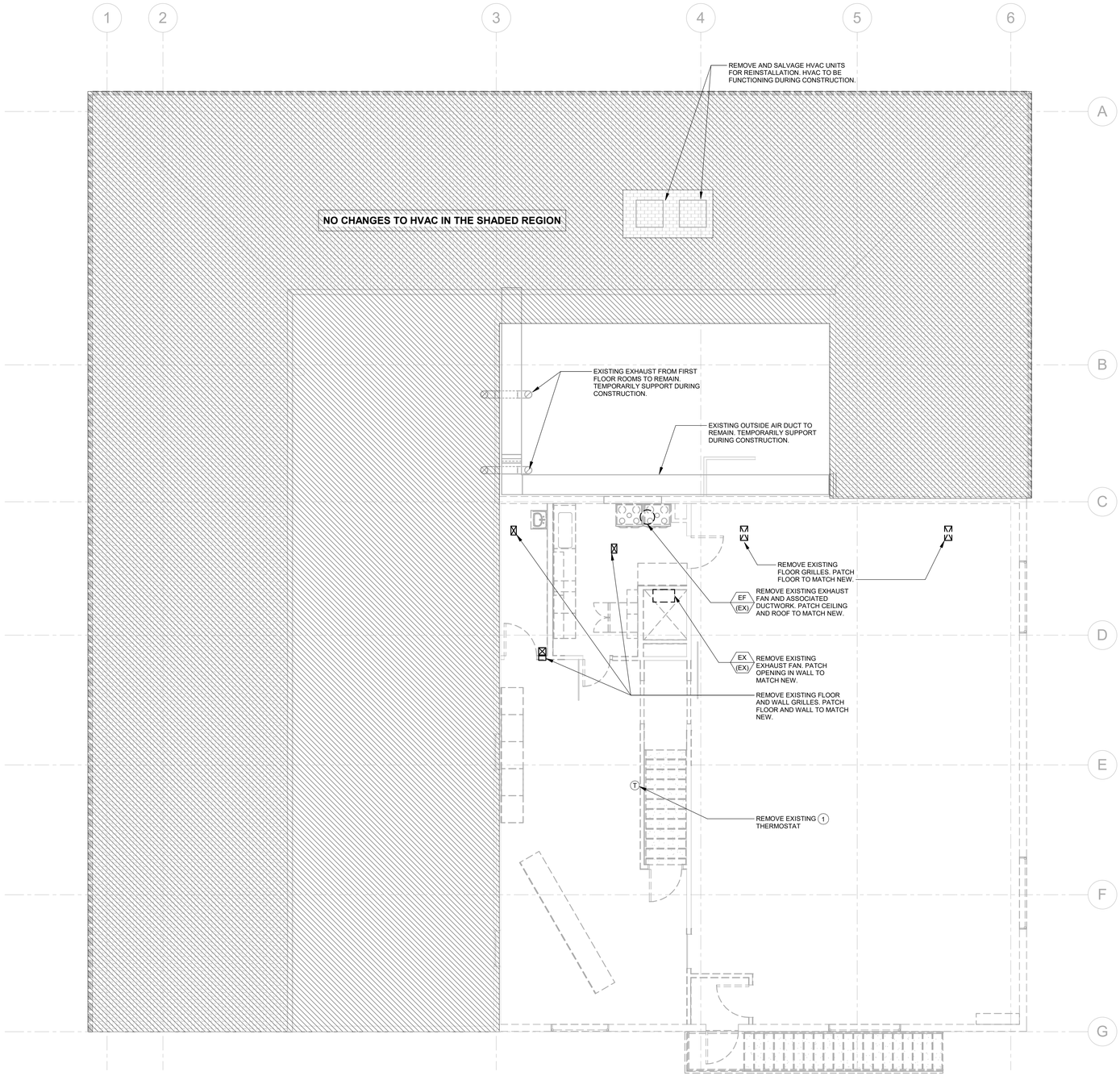

1 MD1.2 MECHANICAL HVAC DEMO - SECOND FLOOR
3/16" = 1'-0"

GENERAL NOTES:

A. REFER TO M0.1 FOR GENERAL NOTES & SYMBOLS.

B. PATCH WALLS, ROOFS, AND/OR FLOOR WHERE DUCTS, GRILLES, PIPES, OR EQUIPMENT ARE REMOVED. PAINT OR FINISH TO MATCH ORIGINAL CONSTRUCTION.

C. WHERE DUCTWORK IS REMOVED, REMOVE ALL ASSOCIATED SUPPORTS.

D. WHERE EQUIPMENT IS REMOVED, REMOVE ALL ASSOCIATED SUPPORTS, DUCTWORK, PIPING, AND CONTROLS.

E. WHERE CONTROLS ARE REMOVED, REMOVE ALL ASSOCIATED WIRING AND/OR PNEUMATIC TUBING. PATCH WALL OPENINGS AND PAINT OR FINISH TO MATCH ORIGINAL CONSTRUCTION. IN WALLS THAT CANNOT BE PATCHED, INSTALL STAINLESS STEEL COVER PLATE. ABANDON PNEUMATIC TUBING IN WALLS. (DEMO OF CONTROLS IS OWNER'S SCOPE OF WORK.)

KEYNOTES (#)

1 ITEM(S) PART OF REMODEL SCOPE OF WORK AND NOT RELATED TO THE SEISMIC RETROFIT. ALL BIDS SHALL CONTAIN SEPARATE LINE ITEM PRICING WHICH DISTINGUISHES REMODEL SCOPE OF WORK FROM SEISMIC RETROFIT SCOPE OF WORK.

ZCS ENGINEERING ARCHITECTURE
127 NW D Street, Grants Pass, Oregon 97526 | 541-479-3865

REEDSPORT FIRE DISTRICT
124 N 4TH ST.
REEDSPORT, OR 97467

REEDSPORT FIRE STATION 7

KCL ENGINEERING
199 E 5th Ave, Suite 35
Eugene, OR
97401
503-212-4612

REGISTERED PROFESSIONAL ENGINEER
86864
OREGON
MAR 8, 2021
CHARLES WHITE
EXPIRES: 6/30/2024

△	DATE:	Description

PROJECT NO.	G-1468-21
DRAWN:	JDH
CHECKED:	SKG
DATE:	01-26-23

MECHANICAL DEMOLITION - SECOND FLOOR

MD1.2

100% CONSTRUCTION DOCUMENTS | BID / PERMIT SET

ONE INCH EQUALS FULL SCALE 4/26/2023 1:03:07 AM

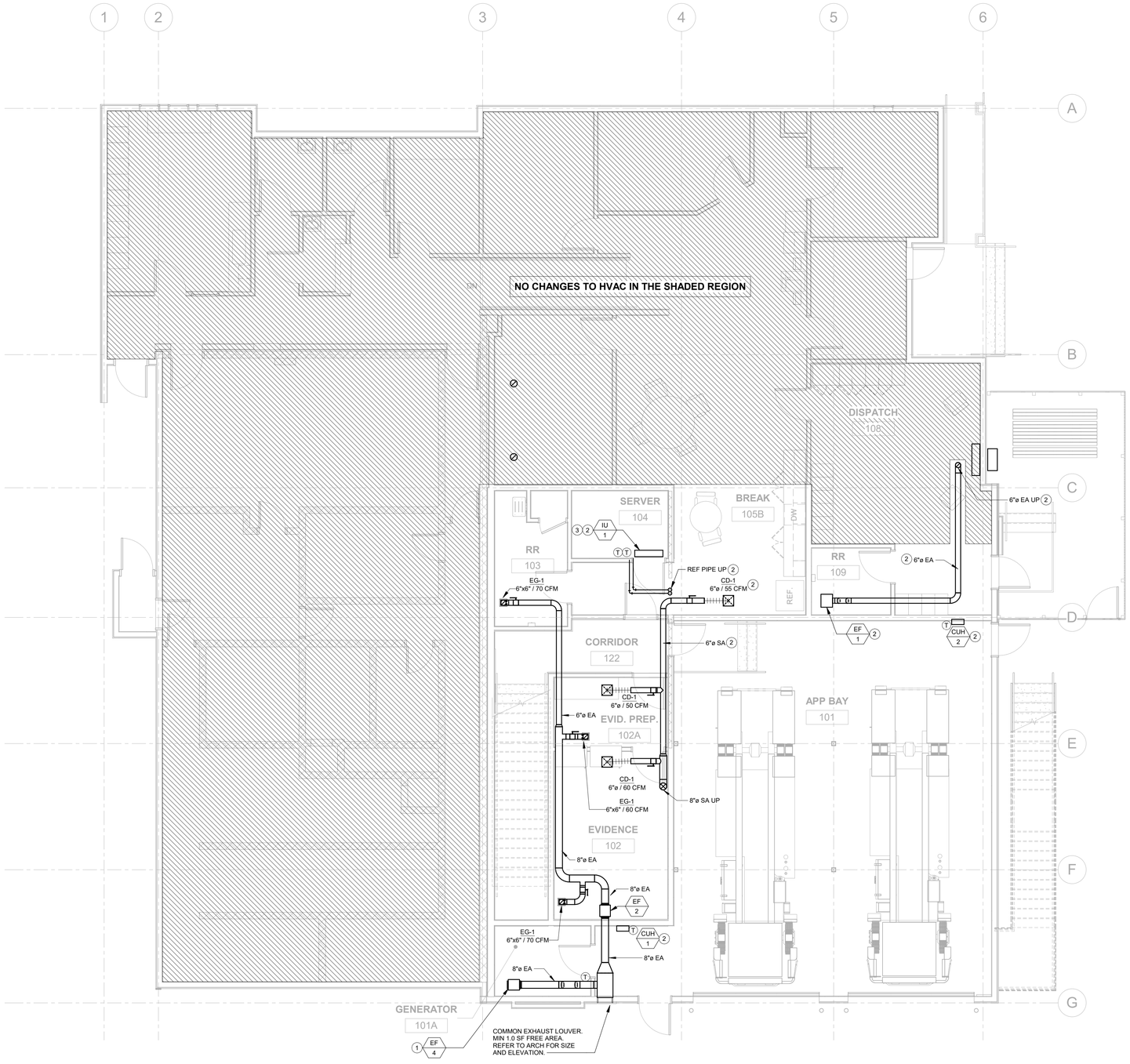

1 M1.1 MECHANICAL HVAC PLAN - FIRST FLOOR
3/16" = 1'-0"

ONE INCH EQUALS FULL SCALE

4/26/2023 1:03:02 AM

GENERAL NOTES

A. REFER TO M0.1 FOR GENERAL NOTES & SYMBOLS.

B. REFER TO M2.1 FOR MECHANICAL DETAILS.

C. REFER TO M3.1 FOR CONTROLS SEQUENCES AND DIAGRAMS.

D. REFER TO M4.1 AND M4.2 FOR MECHANICAL SCHEDULES.

E. BRANCH DUCT SIZES TO AIR TERMINALS SHALL MATCH NECK SIZE OF GRILLE, REGISTER, OR DIFFUSER UNLESS NOTED OTHERWISE.

F. MAXIMUM FLEXIBLE DUCT LENGTH TO DIFFUSERS SHALL BE 60", WITH MAXIMUM OF ONE 90 DEGREE ELBOW.

G. REFRIGERANT PIPING SHOWN IS TO ILLUSTRATE PREFERRED ROUTING. REFER TO MANUFACTURER'S INSTALLATION INSTRUCTIONS FOR PIPE SIZING.

KEYNOTES (#)

1 PROVIDE METAL MESH BUG SCREEN OVER EXHAUST FAN INLET.

2 ITEM(S) PART OF REMODEL SCOPE OF WORK AND NOT RELATED TO THE SEISMIC RETROFIT. ALL BIDS SHALL CONTAIN SEPARATE LINE ITEM PRICING WHICH DISTINGUISHES REMODEL SCOPE OF WORK FROM SEISMIC RETROFIT SCOPE OF WORK.

3 ROUTE IU-1 CONDENSATE DRAIN TO FLOOR DRAIN NEXT TO WATER HEATER OR CONNECT TO LAVATORY TAILPIECE. CONDENSATE PIPING NOT PERMITTED TO ROUTE THROUGH SERVER ROOM.

ZCS ENGINEERING ARCHITECTURE
127 NW D Street, Grants Pass, Oregon 97526 | 541-479-3865

REEDSPORT FIRE DISTRICT
124 N 4TH ST.
REEDSPORT, OR 97467

REEDSPORT FIRE STATION 7

KCL ENGINEERING
199 E 5th Ave, Suite 35
Eugene, OR
97401
503-212-4612

REGISTERED PROFESSIONAL ENGINEER 98864 OREGON MAR. 8, 2022 CHARLES WHITE
EXPIRES: 6/30/2024

△	DATE:	Description

PROJECT NO.	G-1468-21
DRAWN:	JDH
CHECKED:	SKG
DATE:	01-26-23

MECHANICAL HVAC PLAN - FIRST FLOOR

M1.1

100% CONSTRUCTION DOCUMENTS | BID / PERMIT SET

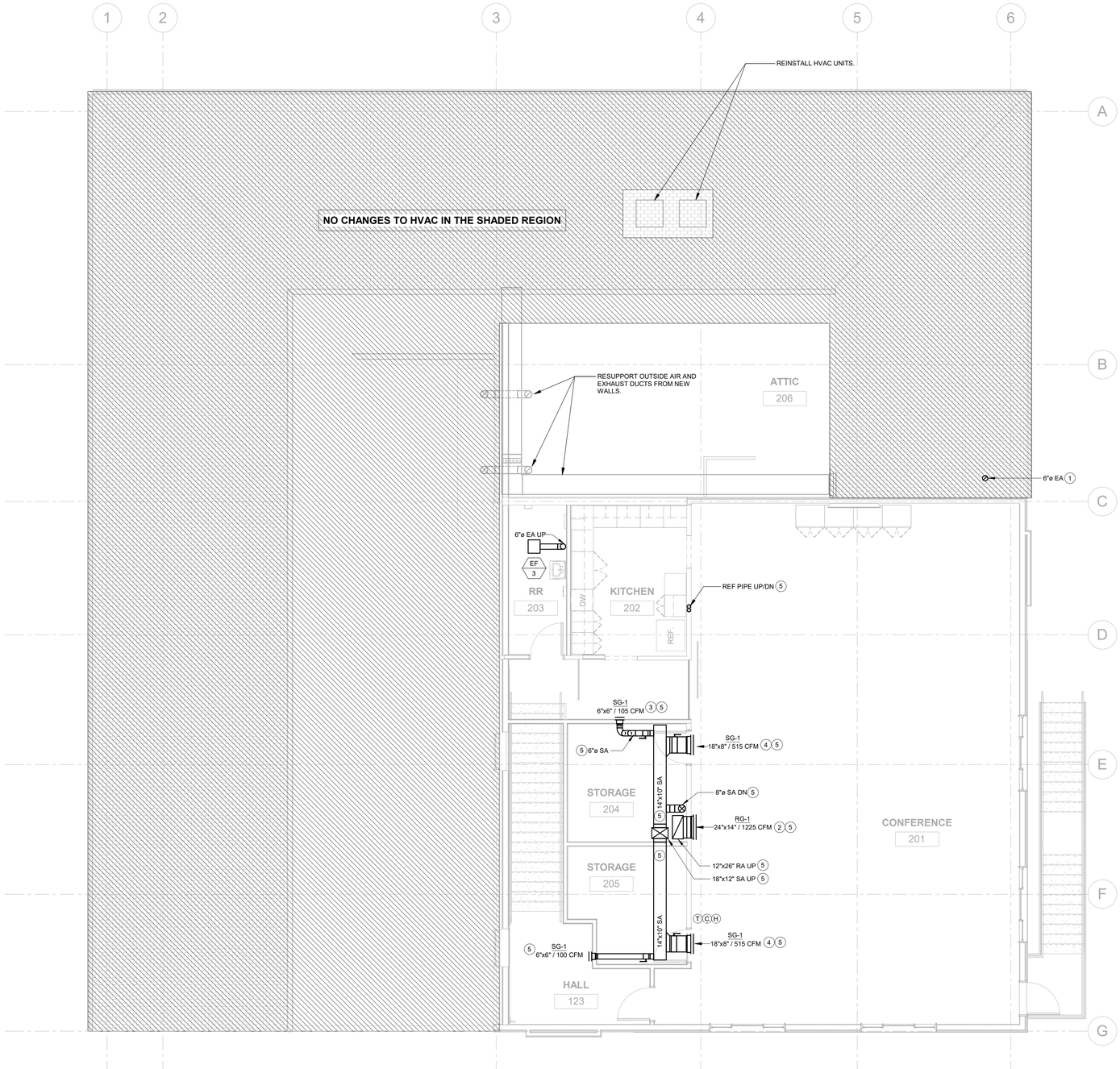

1 M1.2 MECHANICAL HVAC PLAN - SECOND FLOOR

3/16" = 1'-0"

N

ONE INCH EQUALS FULL SCALE

4/26/2023 1:03:03 AM

GENERAL NOTES

A. REFER TO M0.1 FOR GENERAL NOTES & SYMBOLS.

B. REFER TO M2.1 FOR MECHANICAL DETAILS.

C. REFER TO M3.1 FOR CONTROLS SEQUENCES AND DIAGRAMS.

D. REFER TO M4.1 AND M4.2 FOR MECHANICAL SCHEDULES.

E. BRANCH DUCT SIZES TO AIR TERMINALS SHALL MATCH NECK SIZE OF GRILLE, REGISTER, OR DIFFUSER UNLESS NOTED OTHERWISE.

F. MAXIMUM FLEXIBLE DUCT LENGTH TO DIFFUSERS SHALL BE 60", WITH MAXIMUM OF ONE 90 DEGREE ELBOW.

G. REFRIGERANT PIPING SHOWN IS TO ILLUSTRATE PREFERRED ROUTING. REFER TO MANUFACTURER'S INSTALLATION INSTRUCTIONS FOR PIPE SIZING.

KEYNOTES #

1 TERMINATE EXHAUST DUCT WITH ROOF CAP.
2 MOUNT RETURN GRILLE 16" AFF.
3 ALIGN TOP OF SUPPLY GRILLE WITH TOP OF OPENING INTO KITCHEN. ADJUST GRILLE BLADES TO THROW AIRFLOW INTO KITCHEN.
4 INSTALL SUPPLY GRILLE CENTERED ON DOOR AND CENTERED BETWEEN THE TOP OF THE DOOR FRAME AND BOTTOM OF CEILING.
5 ITEM(S) PART OF REMODEL SCOPE OF WORK AND NOT RELATED TO THE SEISMIC RETROFIT. ALL BIDS SHALL CONTAIN SEPARATE LINE ITEM PRICING WHICH DISTINGUISHES REMODEL SCOPE OF WORK FROM SEISMIC RETROFIT SCOPE OF WORK.

ZCS ENGINEERING ARCHITECTURE
127 NW D Street, Grants Pass, Oregon 97526 | 541-479-3865

REEDSPORT FIRE DISTRICT
124 N 4TH ST.
REEDSPORT, OR 97467

REEDSPORT FIRE STATION 7

KCL ENGINEERING
199 E 5th Ave, Suite 35
Eugene, OR
97401
503-212-4612

REGISTERED PROFESSIONAL ENGINEER
Charles White
OREGON
MAR. 8, 2022
CHARLES WHITE
EXPIRES: 6/30/2024

△	DATE:	Description

PROJECT NO.	G-1468-21
DRAWN:	JDH
CHECKED:	SKG
DATE:	01-26-23

MECHANICAL HVAC PLAN - SECOND FLOOR

M1.2

100% CONSTRUCTION DOCUMENTS | BID / PERMIT SET

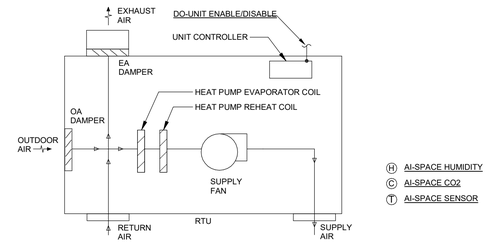

CONTROL SEQUENCE

ROOFTOP UNIT SHALL BE CONTROLLED BY THE LOCAL MICROPROCESSOR CONTROLLER. CONTROLLER SHALL MODULATE DEHUMIDIFICATION, REHEAT, HEATING, ECONOMIZER, AND COOLING AS REQUIRED TO MEET SPACE TEMPERATURE AND HUMIDITY SETPOINTS. UNIT SHALL OPERATE BASED ON 7-DAY PROGRAMMABLE THERMOSTAT.

SPACE TEMPERATURE AND HUMIDITY SETPOINTS SHALL BE RESET BASED ON OUTSIDE AIR TEMPERATURE. WHEN O.A. TEMPERATURE IS ABOVE 60°FTHEN TEMPERATURE AND HUMIDITY SETPOINTS SHALL BE 70°F/60% RH, WHEN O.A. TEMPERATURE IS BELOW 50°F THEN TEMPERATURE AND HUMIDITY SETPOINTS SHALL BE 74°F/50% RH. SETPOINTS BETWEEN SHALL BE A LINEAR VALUE BETWEEN 70°F AND 74°F, AND 50% RH AND 60% RH.

VENTILATION

UNIT SHALL INCLUDE SPACE CO2 SENSOR FOR MONITORING OF PPM OF CO2 IN THE SPACE.
OUTDOOR AIR DAMPER SHALL DEFAULT TO MINIMUM POSITION DURING OCCUPANCY AND SHALL MODULATE OPEN WHENEVER SPACE CO2 PPM EXCEEDS 700 PPM CO2.

INTERLOCKS
THE UNIT SHALL BE HARDWIRED TO SHUTDOWN ON ACTIVATION OF THE FIRE ALARM SYSTEM. WIRING SHALL BE BY EC.

OUTDOOR AIR AND EXHAUST DAMPERS SHALL CLOSE WHEN UNIT IS DISABLED/OFF.

UNIT SHALL SHUTDOWN IF ANY PORTION OF THE AUTO RESET LOW LEVEL TEMPERATURE FALLS BELOW 38°F. UPON RESET, UNIT SHALL ENABLE WITHOUT EXTERNAL INPUT.

1 / M3.1 ROOFTOP UNIT CONTROL

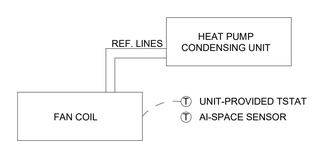

CONTROL SEQUENCE

SPLIT SYSTEM HEAT PUMP SHALL RUN TO MAINTAIN SETPOINT AT STANDALONE THERMOSTAT PROVIDED WITH UNIT. (NO DDC CONTROL).

SPACE TEMPERATURE WILL BE MONITORED AND ALARMED IF THE TEMPERATURE DROPS BELOW 65°F(ADJ.) OR ABOVE 80°F (ADJ.).

2 / M3.1 SPLIT SYSTEM HEAT PUMP CONTROL

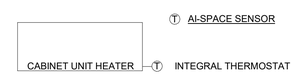

CONTROL SEQUENCE

CABINET UNIT HEATERS SHALL BE CONTROLLED BY INTEGRAL THERMOSTATS.
SPACE TEMPERATURE SHALL BE MONITORED.

3 / M3.1 CABINET UNIT HEATER (CUH) CONTROL

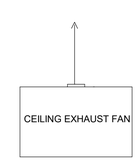

CONTROL SEQUENCE
EXHAUST FAN TO BE INTERLOCKED TO RUN WHEN THE LIGHTS ARE ON. INTERLOCK WIRING SHALL BE BY EC.

4 / M3.1 CEILING EXHAUST FAN CONTROL

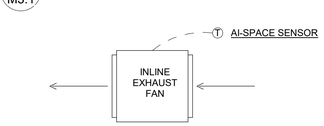

CONTROL SEQUENCE
PROVIDE EXHAUST FAN WITH LINE VOLTAGE THERMOSTAT. EXHAUST FAN SHALL RUN WHEN ROOM TEMPERATURE EXCEEDS 85°F (ADJ.)

5 / M3.1 INLINE EXHAUST FAN CONTROL

ZCS ENGINEERING ARCHITECTURE
127 NW D Street, Grants Pass,
Oregon 97526 | 541-479-3865

REEDSPORT FIRE DISTRICT
124 N 4TH ST.
REEDSPORT, OR 97467

REEDSPORT FIRE STATION 7

KCL ENGINEERING
199 E 5th Ave, Suite 35
Eugene, OR
97401
503-212-4612

REGISTERED PROFESSIONAL ENGINEER
#86864
OREGON
MAR. 8, 2022
CHARLES WHITE
EXPIRES: 6/30/2024

△	DATE:	Description

PROJECT NO.	G-1468-21
DRAWN:	JDH
CHECKED:	SKG
DATE:	01-26-23

MECHANICAL CONTROLS

M3.1

100% CONSTRUCTION DOCUMENTS | BID / PERMIT SET

ONE INCH EQUALS FULL SCALE 4/26/2023 1:03:05 AM

SPLIT SYSTEM INDOOR UNIT

REFERENCE	IU-1
MANUFACTURER	DAIKIN
MODEL #	FTK24AXVJU
TYPE (WALL / HORIZONTAL / VERTICAL / CASSETTE)	WALL MOUNT
SERVES	SERVER 104
WEIGHT (LBS)	31
DIMENSIONS (L x D x H)	40 x 12 x 12
NOMINAL TONS	2.00
MAX UNIT CFM	716
EXTERNAL STATIC PRESSURE (IN. W.G.)	-
COOLING CAPACITY - RATED (BTU/H)	24,000
REFRIGERANT	R410A
VOLTAGE/PH	230/1
MCA	SEE SSO SCHEDULE
MOCP	SEE SSO SCHEDULE
NOTES	1 THRU 5

NOTES:

1. PROVIDE WITH REMOTE WALL MOUNTED THERMOSTAT. WIRING BY M.C.
2. INDOOR UNIT RECEIVES POWER FROM OUTDOOR UNIT BY INTERCONNECTED WIRING PROVIDED WITH UNIT, WIRING INSTALLATION AND DISCONNECT BY E.C.
3. COOLING RATED CAPACITY IS BASED ON THE FOLLOWING CONDITIONS. INDOOR: 80°F/67°FF, OUTDOOR: 95°F/75°F
4. PROVIDE FILTER WITH UNIT.
5. UNIT IS COOLING ONLY.

SPLIT SYSTEM OUTDOOR UNIT

REFERENCE	OU-1
MANUFACTURER	DAIKIN
MODEL #	RK24AXVJU
SERVES	IU-1
WEIGHT (LBS)	106
DIMENSIONS (H x W x D)	28 x 37 x 14
NOMINAL TONS	2.00
COOLING CAPACITY - RATED (BTU/H)	24,000
REFRIGERANT	R410A
# COMPRESSORS	1
SEER	19.0
VOLTAGE - PH	230/1
SYSTEM MCA (A)	13.4
MOCP	20.0
NOTES	1, 2, 3

NOTES:

1. DISCONNECT SHALL BE PROVIDED / INSTALLED BY E.C.
2. UNIT TO BE MOUNTED ON PREFABRICATED ROOF CURB PER MFR RECOMMENDATIONS.
3. REFER TO SPLIT SYSTEM INDOOR UNIT SCHEDULE FOR CAPACITY RATING CONDITIONS.

RTU SCHEDULE

REFERENCE	RTU-1
MANUFACTURER	DAIKIN
MODEL #	DRH0481D
SERVES	FIRE STATION
APPROXIMATE WEIGHT W/ CURB & ACCESSORIES (LBS)	853
DIMENSIONS (H x W x L)	43 x 49 x 74
FAN PERFORMANCE	
SUPPLY FAN	
CFM	1,645
ESP (IN. W.C.)	0.5
MOTOR HP	1
COOLING PERFORMANCE	
TYPE (DX, CHILLED H2O)	HEAT PUMP
REFRIGERANT	R410A
EFFICIENCY (SEER)	17
AMBIENT AIR TEMP (DB) °F	95
EAT (DB/WB) °F	78/64
LAT (DB/WB) °F	55.6/54.4
NET TOTAL CAPACITY (MBH)	46.86
NET SENSIBLE CAPACITY (MBH)	40.492
NUMBER OF COMPRESSORS	2
1ST STAGE COMPRESSOR TYPE	COPELAND SCROLL
HEATING PERFORMANCE	
TYPE (HEAT PUMP, NAT GAS, HEATED WATER, ELECTRIC)	HEAT PUMP
CONTROL	MODULATING
EAT (DB) °F	55
LAT (DB) °F	74.2
OUTPUT @47°F(MBH)	47.5
OUTPUT @17°F(MBH)	29
ELECTRIC COIL (KW)	10
OUTDOOR AIR (CFM)	650
ELECTRICAL DATA	
VOLTAGE - PH	230 - 1
MCA	88.9
MOCP	90
DISCONNECT	INTEGRAL
NOTES	1, 2, 3, 4, 5, 6, 7

NOTES:

1. PROVIDE UNIT WITH SINGLE POINT POWER CONNECTION, POWERED CONVENIENCE OUTLET, AND NON-FUSED DISCONNECT.
2. UNIT TO OPERATE AS VARIABLE SPEED, SINGLE ZONE, AIR HANDLING UNIT. REFER TO CONTROL DRAWINGS FOR DETAILS.
3. REFER TO SPECIFICATIONS FOR FILTER TYPES AND SIZE.
4. PROVIDE UNIT WITH OUTDOOR AND EXHAUST LOW-LEAK DAMPERS; DAMPERS TO BE HARDWIRED TO CLOSE WHEN UNIT IS OFF.
5. PROVIDE UNIT WITH PREMANUFACTURERED ROOF CURB, BOTTOM OF UNIT TO MINIMUM 14-INCHES ABOVE TOP OF ROOFING.
6. PROVIDE UNIT WITH FULL ECONOMIZER POWER EXHAUST.
7. PROVIDE UNIT OUTDOOR CONDENSER COIL, CABINET, AND INDOOR EVAPORATOR COIL WITH 3RD PARTY MARINE GRADE COATING.

CABINET UNIT HEATER SCHEDULE

REFERENCE	CUH-1	CUH-2
MANUFACTURER	INDEECO	INDEECO
MODEL #	933U01500B	933U01500B
WEIGHT (LBS)	28	28
DIMENSIONS (L x D x H)	16 x 5 x 23	16 x 5 x 23
TYPE (WALL (SURFACE, RECESSED)/ CEILING)	RECESSED	RECESSED
HEATING (ELECTRIC / HEATED WATER)	ELECTRIC	ELECTRIC
SERVES	APP BAY 101	APP BAY 101
AIRFLOW (CFM)	160	160
HEATER CAPACITY (KW)	1.5	1.5
FLA (A)	12.9	12.9
VOLTAGE - PH	120 - 1	120 - 1
NOTES	1, 2, 3, 4	1, 2, 3, 4

NOTES:

1. PROVIDE UNIT WITH INTEGRAL THERMOSTAT AND DISCONNECT.

EXHAUST FAN SCHEDULE

REFERENCE	EF-1	EF-2	EF-3	EF-4
MANUFACTURER	GREENHECK	GREENHECK	GREENHECK	GREENHECK
MODEL #	SP-A90	SQ-70-VG	SP-A90	SQ-70-VG
TYPE	IN-CEILING	INLINE	IN-CEILING	INLINE
SERVES	BATHROOM	EVIDENCE + RR	BATHROOM	GENERATOR ROOM
WEIGHT (LBS)	12	30	12	30
DIMENSIONS (L x W x H)	13 x 11 x 9	12 x 13 x 12	13 x 11 x 9	12 x 13 x 12
AIRFLOW (CFM)	70	200	70	110
ESP (IN. W.C.)	0.30	0.30	0.30	0.30
FAN RPM	900	1,673	900	1,465
BELT/DIRECT	DIRECT	DIRECT	DIRECT	DIRECT
SPEED CONTROL (YES/NO)	NO	NO	NO	NO
SONES	0.5	5.7	0.5	3.6
DAMPER TYPE	GRAV. BACKDRAFT	GRAV. BACKDRAFT	GRAV. BACKDRAFT	GRAV. BACKDRAFT
MOTOR HP	-	1/15	-	1/15
WATTS	15.0	-	15.0	-
VOLTAGE - PHASE	120-1	120-1	120-1	120-1
FLA	0.17	1.3	0.17	1.3
NOTES	1, 2	1, 2	1, 2	1, 2

NOTES:

1. REFER TO CONTROL DRAWINGS FOR ADDITIONAL DETAILS.
2. PROVIDE UNIT WITH SINGLE POINT POWER CONNECTION AND DISCONNECT.

ZCS ENGINEERING ARCHITECTURE
127 NW D Street, Grants Pass,
Oregon 97526 | 541-479-3865

REEDSPORT FIRE DISTRICT
124 N 4TH ST.
REEDSPORT, OR 97467

REEDSPORT FIRE STATION 7

KCL ENGINEERING
199 E 5th Ave, Suite 35
Eugene, OR
97401
503-212-4612

REGISTERED PROFESSIONAL ENGINEER
98664
OREGON
MAR. 8, 2022
CHARLES WHITE
EXPIRES: 6/30/2024

△	DATE:	Description

PROJECT NO.	G-1468-21
DRAWN:	JDH
CHECKED:	SKG
DATE:	01-26-23

MECHANICAL SCHEDULES

M4.1

100% CONSTRUCTION DOCUMENTS | BID / PERMIT SET

ONE INCH EQUALS FULL SCALE 4/26/2023 1:03:06 AM

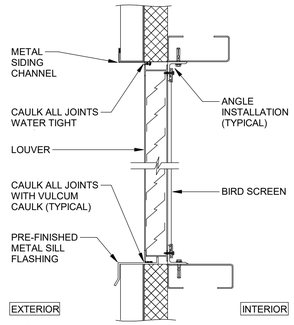

7 / M2.1 EXHAUST LOUVER DETAIL
NTS

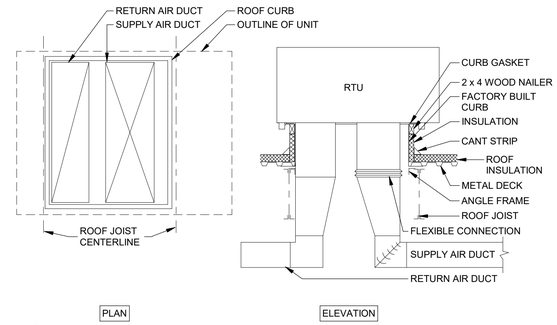

3 / M2.1 RTU ROOFTOP UNITS DETAIL
NTS

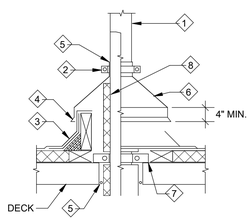

1. PIPE: REFER TO MFR FOR SIZE & TERMINATION.
2. CLAMP FLASHING TO PIPE.
3. CURB, CANT, AND ROOFING BY MECHANICAL CONTRACTOR.
4. COUNTER FLASHING BY MECHANICAL CONTRACTOR.
5. SEAL ALL OPENINGS WITH NON-HARDENING CAULK; IF OPERATING SURFACE TEMPERATURE WILL EXCEED 180 DEGREES F. USE METALBESTOS P-600 OR P-2000E JOINT SEALANT.
6. TRANSITION FROM CURB TO OUTSIDE OF PIPE.
7. RISER CLAMP: SUPPORT ON ROOF DECK.
8. IF PIPE IS INSULATED, CARRY INSULATION UP INTO CURB.

8 / M2.1 REF. PIPE THRU ROOF
NTS

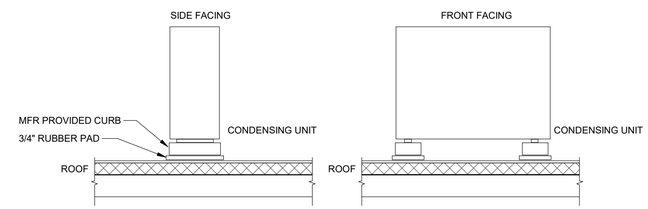

4 / M2.1 CONDENSING UNIT ON ROOF DETAIL
NTS

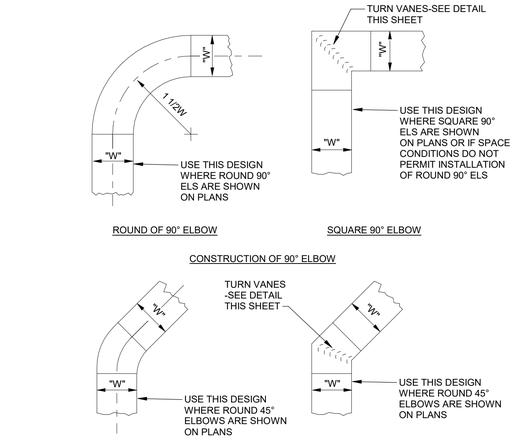

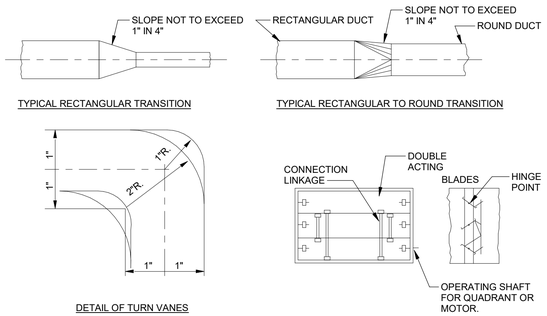

INSTALLATION NOTES

1. ALL DUCTS SHALL BE CONSTRUCTED AND ERECTED IN A NEAT AND WORKMAN LIKE MANNER.
2. DUCTS SHALL BE CONSTRUCTED OF THE WEIGHTS, GAGES AND MATERIAL AS SPECIFIED.
3. THE DIMENSION SHOWN FOR ALL DUCTS SHOWN IN PLAN GIVE THE WIDTH FIRST AND THEN THE HEIGHT.
4. DUCT RISERS SHOULD BE SUPPORTED BY ANGLES AT EVERY FLOOR.
5. TURNING VANES SHALL BE INSTALLED IN ALL ABRUPT ELBOWS TO PREVENT TURBULANCE.
6. DUCTS SHALL BE SECURELY ATTACHED TO THE BUILDING CONSTRUCTION IN AN APPROVED MANNER.
7. DIVERGING TRANSITION PIECES SHALL BE MADE AS GRADUAL AS POSSIBLE.
8. INSTALL FIRE DAMPERS IN ACCORDANCE TO ALL APPLICABLE REQUIREMENTS INCLUDING UL 555.
9. ACCESS PANELS SHALL BE PLACED BEFORE AND/OR AFTER EQUIMENT INSTALLED IN THE DUCT.
10. DUCT AREA SHALL NOT BE DECREASED MORE THAN 10 PERCENT WHEN OBSTRUCTIONS CANNOT BE AVOIDED, AND THEN A STREAMLINED FITTING SHALL BE USED.
11. FLEXIBLE FABRIC CONNECTIONS (OR EQUAL) SHALL BE USED ON BOTH INLETS AND OUTLETS OF ALL FANS.
12. JOINTS AND SEAMS OF SUPPLY DUCTS SHALL BE FASTENED SECURELY AND MADE AIR TIGHT.

1 / M2.1 DETAILS OF THE LOW VELOCITY DUCT LAYOUT
NTS

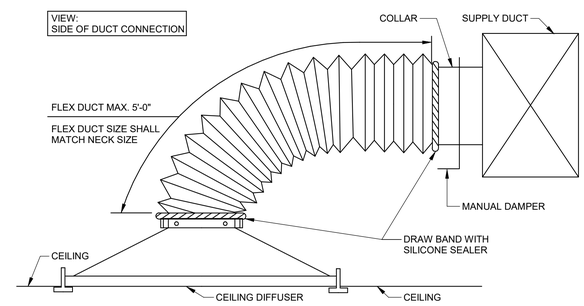

5 / M2.1 TYPICAL DIFFUSER CONNECTION
NTS

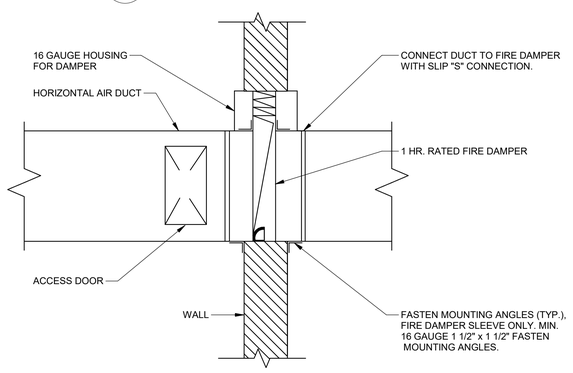

NOTES:
1. DAMPER ASSEMBLY INSTALLED IN AND FASTENED TO THE SLEEVE.
2. MAINTAIN FULL DUCT SIZE. DAMPER HOUSING SHALL NOT OBSTRUCT AIR FLOW (TYPE "B").

9 / M2.1 TYPICAL FIRE DAMPER INSTALLATION DETAIL
NTS

ALL WORK RELATED TO ROOF REPAIR OR PATCHING TO BE COMPLETED BY A AUTHORIZED REPRESENTATIVE FOR ROOFING INSTALLATIONS.

DETAIL IS FOR REFERENCE ONLY INSTALL PER MFR RECOMMENDATIONS VERIFY INSTALLATIONS WITH ROOF MFR TO ENSURE WARRANTY COMPLIANCE.

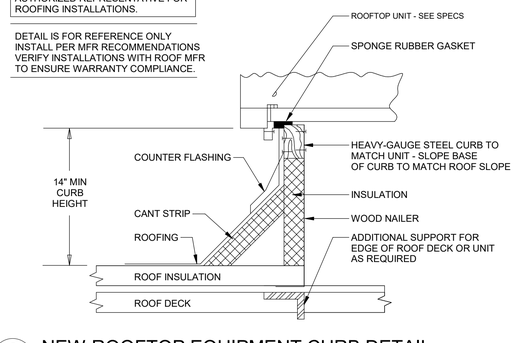

6 / M2.1 NEW ROOFTOP EQUIPMENT CURB DETAIL
NTS

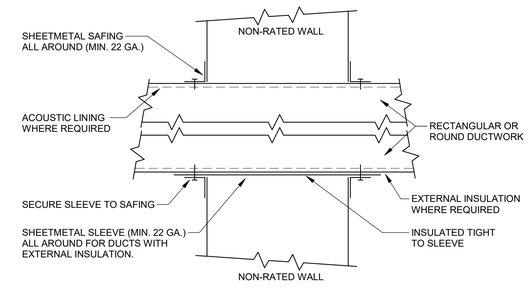

2 / M2.1 DUCT PENETRATION THROUGH NON-FIRE RATED WALL DETAIL
NTS

ZCS ENGINEERING ARCHITECTURE
127 NW D Street, Grants Pass, Oregon 97526 | 541-479-3865

REEDSPORT FIRE DISTRICT
124 N 4TH ST.
REEDSPORT, OR 97467

REEDSPORT FIRE STATION 7

KCL ENGINEERING
199 E 5th Ave, Suite 35
Eugene, OR
97401
503-212-4612

REGISTERED PROFESSIONAL ENGINEER 86864 OREGON MAR. 8, 2022 CHARLES WHITE
EXPIRES: 6/30/2024

△	DATE:	Description

PROJECT NO.	G-1468-21
DRAWN:	JDH
CHECKED:	SKG
DATE:	01-26-23

MECHANICAL DETAILS

M2.1

100% CONSTRUCTION DOCUMENTS | BID / PERMIT SET

ONE INCH EQUALS FULL SCALE 4/26/2023 1:03:04 AM

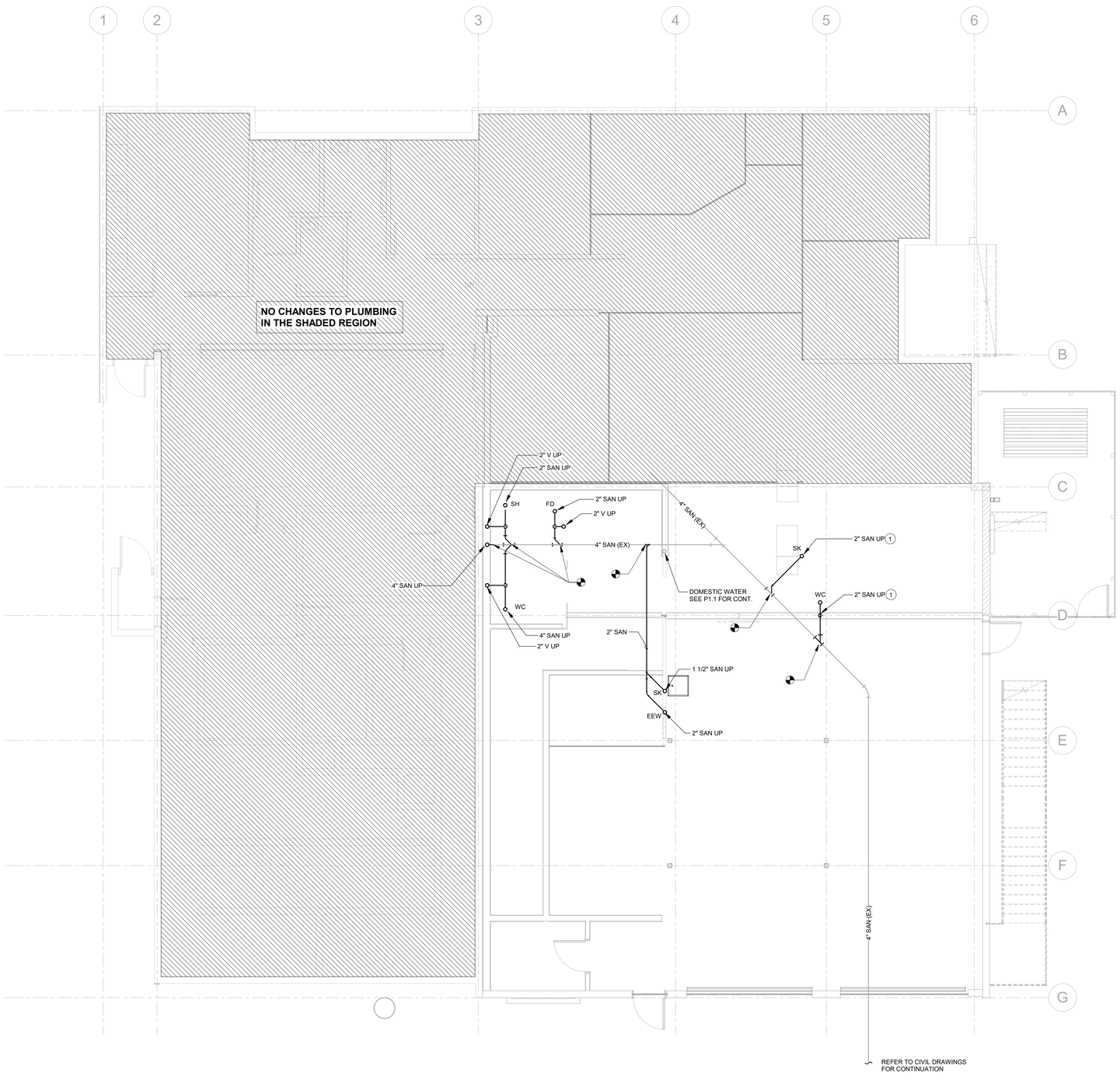

1 P1.0 PLUMBING PLAN - FOUNDATION
3/16" = 1'-0"

ONE INCH EQUALS FULL SCALE 4/26/2023 1:03:08 AM

GENERAL NOTES:

A. REFER TO M0.1 FOR GENERAL NOTES & SYMBOLS.

B. REFER TO P2.1 FOR PLUMBING DETAILS.

C. REFER TO P3.1 FOR PLUMBING SCHEDULES.

D. REFER TO PLUMBING FIXTURE ROUGH-IN SCHEDULE FOR BRANCH PIPE SIZING TO INDIVIDUAL PLUMBING FIXTURES.

E. COORDINATE PIPE ROUTING WITH DUCTWORK. DUCTWORK HAS PRIORITY OVER PRESSURE PIPING.

F. BRANCH PIPING SHALL BE TAKEN OFF THE TOP OF MAIN PIPING.

KEYNOTES #

1 ITEM(S) PART OF REMODEL SCOPE OF WORK AND NOT RELATED TO THE SEISMIC RETROFIT. ALL BIDS SHALL CONTAIN SEPARATE LINE ITEM PRICING WHICH DISTINGUISHES REMODEL SCOPE OF WORK FROM SEISMIC RETROFIT SCOPE OF WORK.

ZCS ENGINEERING ARCHITECTURE
127 NW D Street, Grants Pass, Oregon 97526 | 541-479-3865

REEDSPORT FIRE DISTRICT
124 N 4TH ST.
REEDSPORT, OR 97467

REEDSPORT FIRE STATION 7

KCL ENGINEERING
199 E 5th Ave, Suite 35
Eugene, OR
97401
503-212-4612

REGISTERED PROFESSIONAL ENGINEER
#86664
OREGON
MAR. 8, 2022
CHARLES WHITE
EXPIRES: 6/30/2024

△	DATE:	Description

PROJECT NO.	G-1468-21
DRAWN:	JDH
CHECKED:	SKG
DATE:	01-26-23

PLUMBING PLAN - FOUNDATION

P1.0

100% CONSTRUCTION DOCUMENTS | BID / PERMIT SET

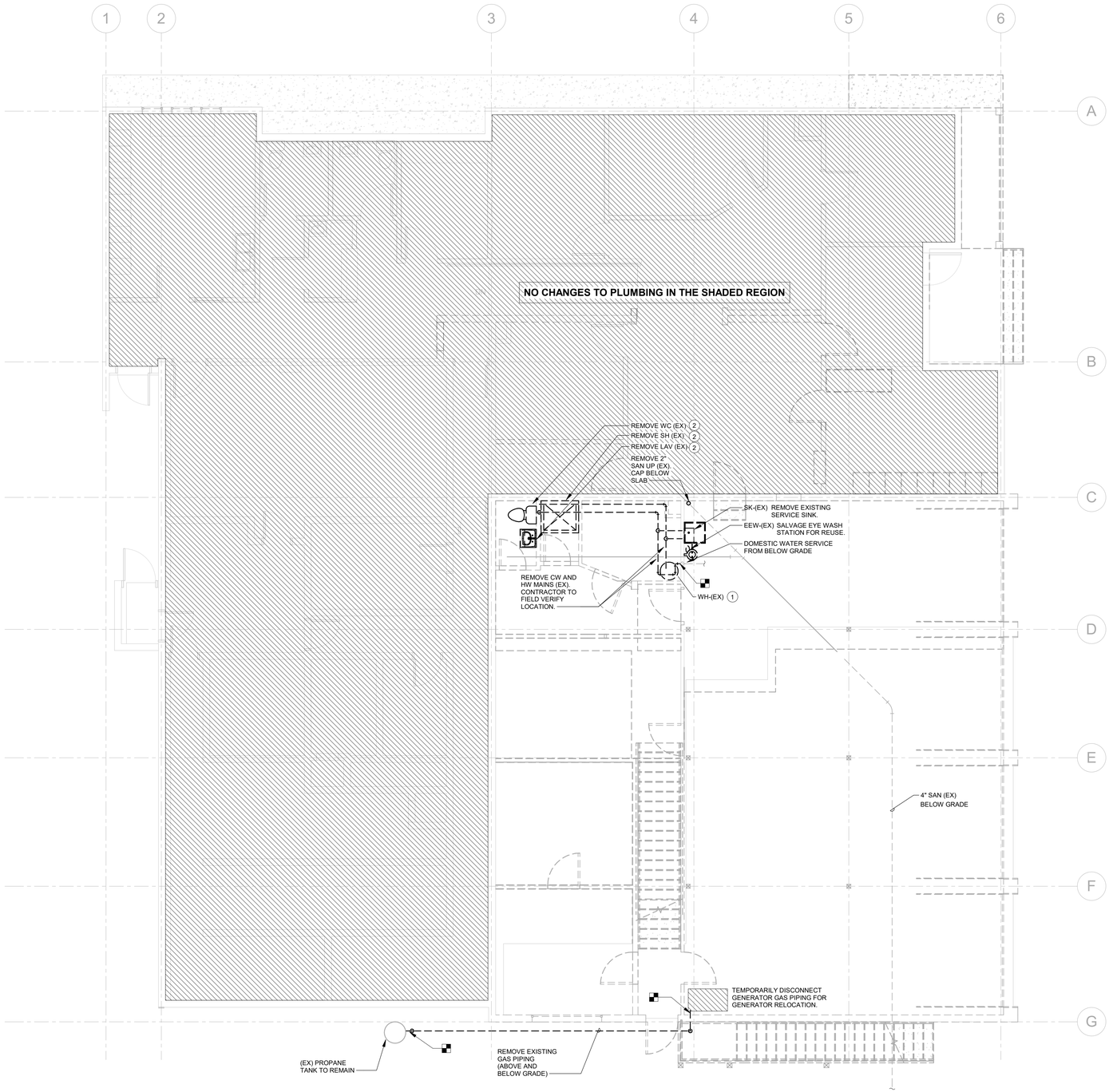

1 PD1.1 PLUMBING DEMO - FIRST FLOOR
3/16" = 1'-0"

N

ONE INCH EQUALS FULL SCALE 4/26/2023 1:03:12 AM

GENERAL NOTES:

1. REFER TO M0.1 FOR GENERAL NOTES & SYMBOLS.
2. PATCH WALLS, ROOFS, AND/OR FLOOR WHERE PIPES OR EQUIPMENT ARE REMOVED. PAINT OR FINISH TO MATCH ORIGINAL CONSTRUCTION.
3. WHERE PIPING, EQUIPMENT, AND PLUMBING FIXTURES ARE REMOVED, REMOVE ALL VALVES, SUPPORTS, INSULATION, AND APPURTENANCES. REMOVE PIPING BACK TO MAINS AND CAP. DO NOT LEAVE DEAD LEGS LONGER THAN 1.5 TIMES THE DIAMETER OF THE PIPE.

KEYNOTES #

1 DISCONNECT AND TEMPORARILY STORE EXISTING WATER HEATER. WATER HEATER TO BE REINSTALLED IN NEW LOCATION.

2 REMOVE ALL ASSOCIATED PLUMBING INCLUDING CW, HW, V AND SAN. CONTRACTOR TO FIELD VERIFY EXACT LOCATION OF PLUMBING PIPING.

ZCS ENGINEERING ARCHITECTURE
127 NW D Street, Grants Pass, Oregon 97526 | 541-479-3865

REEDSPORT FIRE DISTRICT
124 N 4TH ST.
REEDSPORT, OR 97467

REEDSPORT FIRE STATION 7

KCL ENGINEERING
199 E 5th Ave, Suite 35
Eugene, OR
97401
503-212-4612

REGISTERED PROFESSIONAL ENGINEER 88664 OREGON MAR. 8, 2022 CHARLES WHITE
EXPIRES: 6/30/2024

△	DATE:	Description

PROJECT NO.	G-1468-21
DRAWN:	JDH
CHECKED:	SKG
DATE:	01-26-23

PLUMBING DEMOLITION

PD1.1

100% CONSTRUCTION DOCUMENTS | BID / PERMIT SET

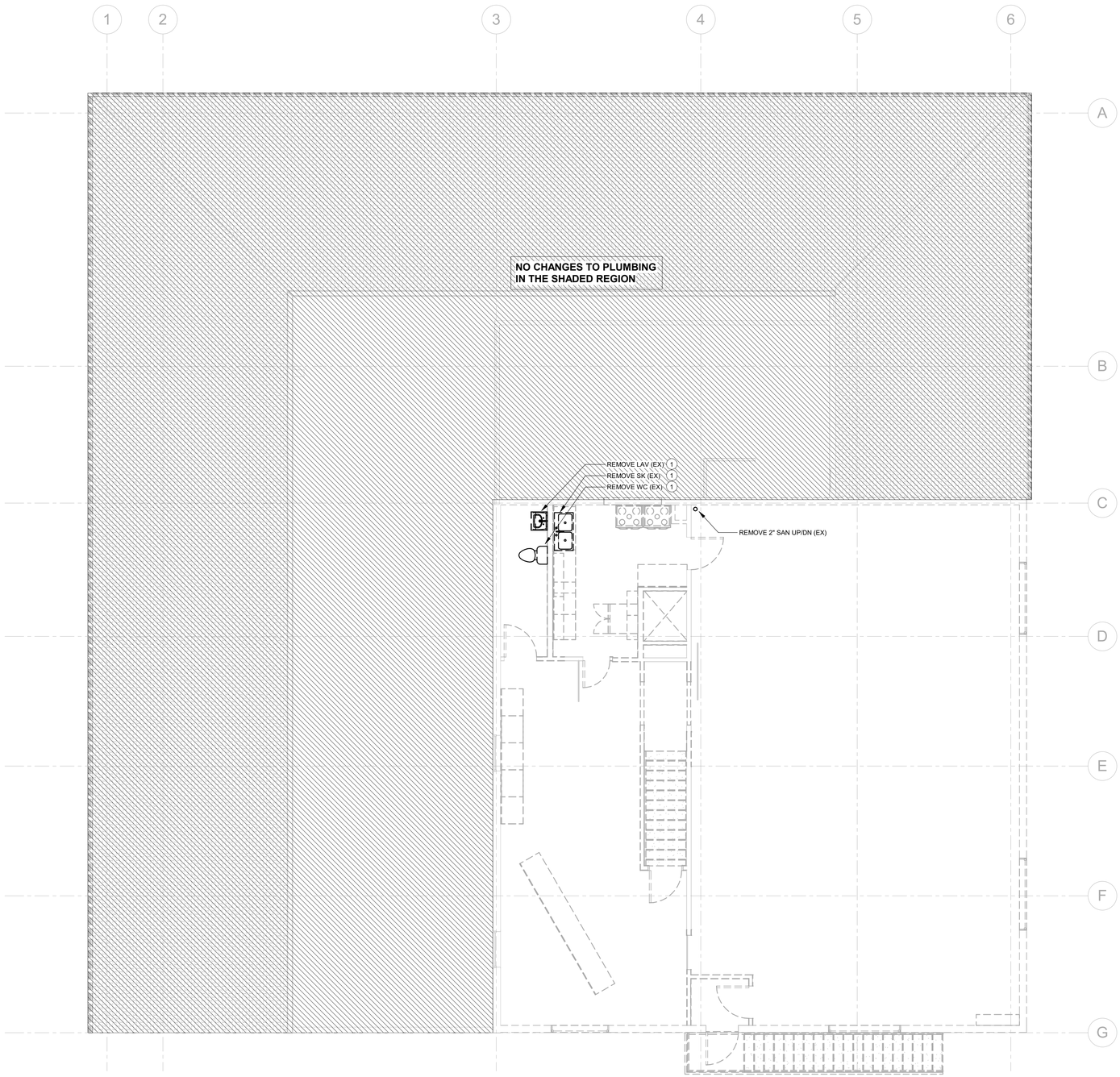

1 PD1.2 PLUMBING DEMO - SECOND FLOOR
3/16" = 1'-0"

GENERAL NOTES:

1. REFER TO M0.1 FOR GENERAL NOTES & SYMBOLS.
2. PATCH WALLS, ROOFS, AND/OR FLOOR WHERE PIPES OR EQUIPMENT ARE REMOVED. PAINT OR FINISH TO MATCH ORIGINAL CONSTRUCTION.
3. WHERE PIPING, EQUIPMENT, AND PLUMBING FIXTURES ARE REMOVED, REMOVE ALL VALVES, SUPPORTS, INSULATION, AND APPURTENANCES. REMOVE PIPING BACK TO MAINS AND CAP. DO NOT LEAVE DEAD LEGS LONGER THAN 1.5 TIMES THE DIAMETER OF THE PIPE.

KEYNOTES (#)

1 REMOVE ALL ASSOCIATED PLUMBING INCLUDING CW, HW, V AND SAN. CONTRACTOR TO FIELD VERIFY EXACT LOCATION OF PLUMBING PIPING.

ZCS ENGINEERING ARCHITECTURE
127 NW D Street, Grants Pass, Oregon 97526 | 541-479-3865

REEDSPORT FIRE DISTRICT
124 N 4TH ST.
REEDSPORT, OR 97467

REEDSPORT FIRE STATION 7

KCL ENGINEERING
199 E 5th Ave, Suite 35
Eugene, OR
97401
503-212-4612

REGISTERED PROFESSIONAL ENGINEER
CHARLES WHITE
OREGON
MAR. 8, 2022
EXPIRES: 6/30/2024

△	DATE:	Description

PROJECT NO.	G-1468-21
DRAWN:	JDH
CHECKED:	SKG
DATE:	01-26-23

PLUMBING DEMOLITION - SECOND FLOOR

PD1.2

100% CONSTRUCTION DOCUMENTS | BID / PERMIT SET

ONE INCH EQUALS FULL SCALE 4/26/2023 1:03:13 AM

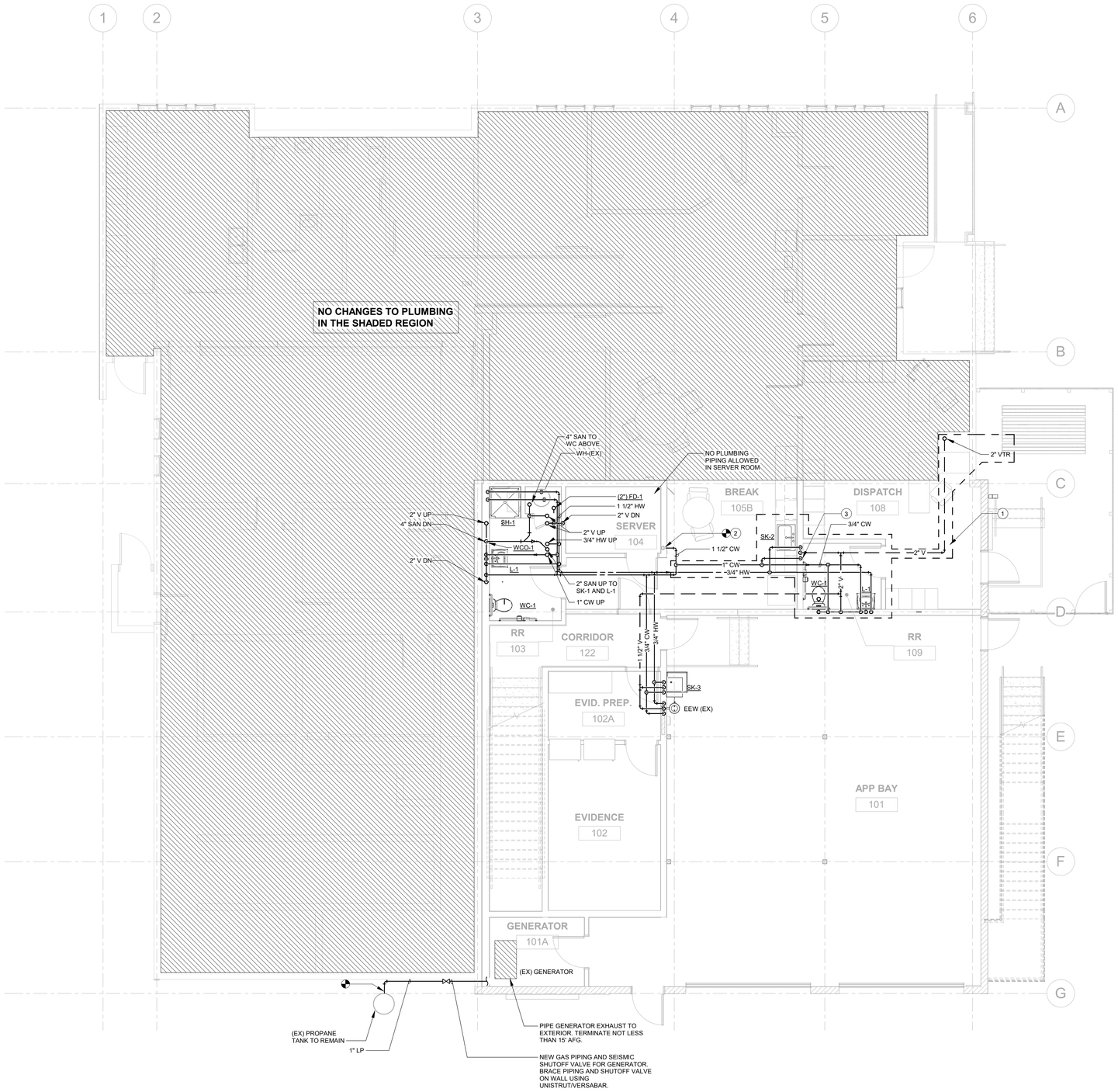

1 / P1.1 PLUMBING PLAN - FIRST FLOOR
3/16" = 1'-0"

N

ONE INCH EQUALS FULL SCALE 4/26/2023 1:03:10 AM

GENERAL NOTES:

A. REFER TO M0.1 FOR GENERAL NOTES & SYMBOLS.

B. REFER TO P2.1 FOR PLUMBING DETAILS.

C. REFER TO P3.1 FOR PLUMBING SCHEDULES.

D. REFER TO PLUMBING FIXTURE ROUGH-IN SCHEDULE FOR BRANCH PIPE SIZING TO INDIVIDUAL PLUMBING FIXTURES.

E. COORDINATE PIPE ROUTING WITH DUCTWORK. DUCTWORK HAS PRIORITY OVER PRESSURE PIPING.

F. BRANCH PIPING SHALL BE TAKEN OFF THE TOP OF MAIN PIPING.

KEYNOTES (#)

1 ITEM(S) PART OF REMODEL SCOPE OF WORK AND NOT RELATED TO THE SEISMIC RETROFIT. ALL BIDS SHALL CONTAIN SEPARATE LINE ITEM PRICING WHICH DISTINGUISHES REMODEL SCOPE OF WORK FROM SEISMIC RETROFIT SCOPE OF WORK.

2 CONNECT TO EXISTING DOMESTIC WATER SERVICE. PROVIDE SHUT OFF VALVE AND ACCESS PANEL ON BREAKROOM SIDE OF WALL.

3 EXTEND CW TO NEARBY REFRIGERATOR AND DISHWASHER. REFER TO MANUFACTURER'S INSTALLATION INSTRUCTIONS.

ZCS ENGINEERING ARCHITECTURE
127 NW D Street, Grants Pass, Oregon 97526 | 541-479-3865

REEDSPORT FIRE DISTRICT
124 N 4TH ST.
REEDSPORT, OR 97467

REEDSPORT FIRE STATION 7

KCL ENGINEERING
199 E 5th Ave, Suite 35
Eugene, OR
97401
503-212-4612

REGISTERED PROFESSIONAL ENGINEER
#98664
Charles White
OREGON
MAR 8, 2022
CHARLES WHITE
EXPIRES: 6/30/2024

△	DATE:	Description

PROJECT NO.	G-1468-21
DRAWN:	JDH
CHECKED:	SKG
DATE:	01-26-23

PLUMBING PLAN - FIRST FLOOR

P1.1

100% CONSTRUCTION DOCUMENTS | BID / PERMIT SET

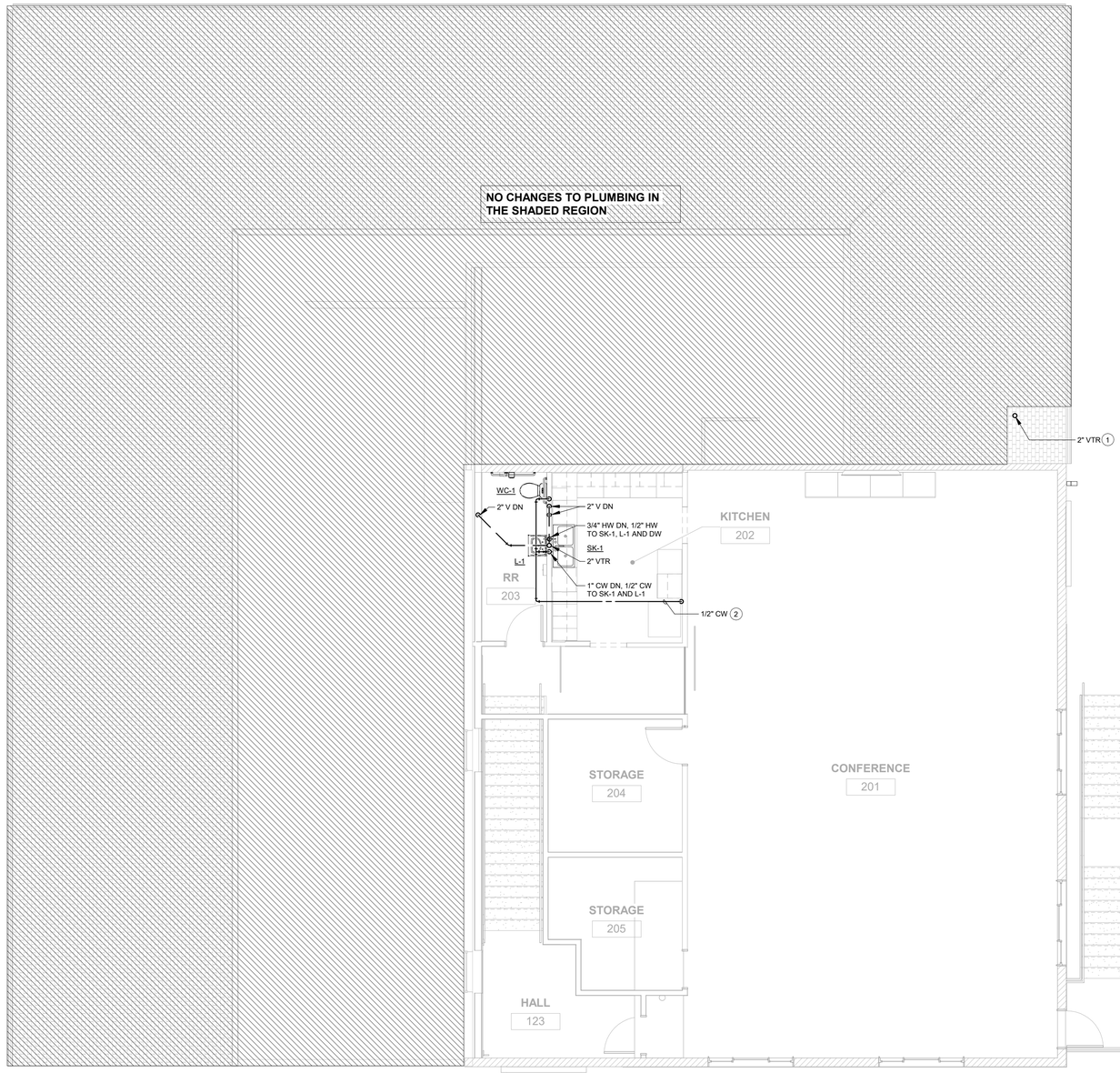

1 P1.2 PLUMBING PLAN - SECOND FLOOR
3/16" = 1'-0"

N

ONE INCH EQUALS FULL SCALE 4/26/2023 1:03:11 AM

GENERAL NOTES:

A. REFER TO M0.1 FOR GENERAL NOTES & SYMBOLS.

B. REFER TO P2.1 FOR PLUMBING DETAILS.

C. REFER TO P3.1 FOR PLUMBING SCHEDULES.

D. REFER TO PLUMBING FIXTURE ROUGH-IN SCHEDULE FOR BRANCH PIPE SIZING TO INDIVIDUAL PLUMBING FIXTURES.

E. COORDINATE PIPE ROUTING WITH DUCTWORK. DUCTWORK HAS PRIORITY OVER PRESSURE PIPING.

F. BRANCH PIPING SHALL BE TAKEN OFF THE TOP OF MAIN PIPING.

KEYNOTES (#)

1 ITEM(S) PART OF REMODEL SCOPE OF WORK AND NOT RELATED TO THE SEISMIC RETROFIT. ALL BIDS SHALL CONTAIN SEPARATE LINE ITEM PRICING WHICH DISTINGUISHES REMODEL SCOPE OF WORK FROM SEISMIC RETROFIT SCOPE OF WORK.

2 CONNECT TO NEW REFRIGERATOR. REFER TO MANUFACTURER'S INSTALLATION INSTRUCTIONS.

ZCS ENGINEERING ARCHITECTURE
127 NW D Street, Grants Pass, Oregon 97526 | 541-479-3865

REEDSPORT FIRE DISTRICT
124 N 4TH ST.
REEDSPORT, OR 97467

REEDSPORT FIRE STATION 7

KCL ENGINEERING
199 E 5th Ave, Suite 35
Eugene, OR
97401
503-212-4612

REGISTERED PROFESSIONAL ENGINEER
88664
OREGON
MAR 8, 2022
CHARLES WHITE
EXPIRES: 6/30/2024

△	DATE:	Description

PROJECT NO.	G-1468-21
DRAWN:	JDH
CHECKED:	SKG
DATE:	01-26-23

PLUMBING PLAN - SECOND FLOOR

P1.2

100% CONSTRUCTION DOCUMENTS | BID / PERMIT SET

PLUMBING FIXTURE SCHEDULE

REFERENCE	MFR	MODEL	DESCRIPTION	TRIM
FCO-1	ZURN	Z1400	ADJUSTABLE FLOOR CLEANOUT, CAST IRON BODY, TAPERED THREAD PLUG AND ROUND NICKEL BRONZE SCORIATED CAST IRON HEAVY-DUTY SECURED TOP, ADJUSTABLE TO FINISHED FLOOR. OUTLET SIZE AS NOTED ON DRAWINGS.	NA
FD-1	ZURN	Z415B	CAST IRON BODY FLOOR DRAIN, TYPE "B" 6" ROUND POLISHED NICKEL BRONZE STRAINER. OUTLET SIZE AS NOTED ON DRAWINGS.	PROVIDE WITH TRAP GUARD; PROSET "TRAP GUARD", SURE SEAL "MODEL SS", OR APPROVED EQUAL.
L-1 (ADA) [WALL HUNG WITH BACKSPLASH]	KOHLER	K-2005	WALL HUNG, VITREOUS CHINA LAVATORY, OVERALL DIMENSIONS 21" x 18", 4" CENTER HOLES, BACKSPLASH, OVERFLOW. WALL MOUNT / PROVIDE WITH CONCEALED ARM CARRIER. ADA COMPLIANT.	DELTA "591-T1250", ADA COMPLIANT, BATTERY POWERED SENSOR TYPE FAUCET, WITH OFFSET GRID STRAINER AND TRAP, [TRUEBRO "102W, 105" CW, HW, AND WASTE PIPE GUARDS AND] ESCUTCHEONS. MAXIMUM FIXTURE FLOW TO BE 0.5 GPM. PROVIDE POWERS "LFE480" POINT OF USE MIXING VALVE UNDER FIXTURE. MIXING VALVE MUST MEET ASSE 1070 AND UPC 2009 REQUIREMENTS. PROVIDE WITH 1/4 TURN, 3/8" BRASS STOPS.
SH-1 (ADA)	AQUARIUS [TRIM SPRAY HAND HELD SHOWER HEAD TRIM]	G6233BF	ONE PIECE SHOWER, FIBERGLASS CONSTRUCTION, WHITE GELCOAT FINISH, 62"x33" NOMINAL, RIGHT OR LEFT HAND AS SHOWN ON DRAWINGS, INTEGRAL SOAP DISH, 2" FLOOR DRAIN. 4" NICKEL BRONZE STRAINER. ASTM F-462, ANSI A117.1-1992, AND ADA COMPLIANT. 27"x37"x1.5" STAINLESS STEEL L-BAR, 26"x21" FOLD UP SEAT, 1" DIAMETER STAINLESS STEEL CURTAIN ROD. MOUNT WITH STAINLESS STEEL NUTS AND BOLTS. SHOWER CURTAIN BY OWNER. UNIT SHALL BE RECESSED IN SUB-FLOOR TO ALLOW FOR A MAXIMUM CURB HEIGHT OF 1/2" OR LESS ABOVE THE FINISHED FLOOR. MOUNT SHOWER CURTAIN ROD AS HIGH AS POSSIBLE.	DELTA "T13H152", SINGLE HANDLE PRESSURE BALANCED MIXING FAUCET, BRASS OR BRONZE CONSTRUCTION, ON/OFF-COLD-HOT TEMPERATURE RANGE INDICATOR DIAL, POLISHED CHROME CAST METAL LEVER HANDLE, INTEGRAL CHECK STOPS, ADJUSTABLE TEMPERATURE LIMIT STOP, ADJUSTABLE SPRAY HAND HELD SHOWER, CHROME-PLATED 24" MOUNTING RAIL, CHROME-PLATED BRASS SWIVEL CONNECTOR, 92" SS HOSE, CHROME-PLATED BRASS SUPPLY ELBOW WITH FLANGE, CHROME-PLATED IN-LINE VACUUM BREAKER WITH CHROME-PLATED PIPING AND FLANGES, ASSE 1016 LISTED. INSTALL CONTROLS BETWEEN 38" AND 48".
SK-1 [2-BOWL COUNTER TOP]	ELKAY	ELUHAD421855	DOUBLE BOWL, UNDERMOUNT, 18-GAUGE STAINLESS STEEL, COMPLETELY UNDERCOATED, 42" SIDE TO SIDE x 18" FRONT TO BACK, EACH BOWL 19" x 16" x 5 3/8" DEEP. VERIFY FINAL DIMENSIONS FROM ARCH ELEVATION AND MILWORK DRAWINGS. COORDINATE ALL REQUIRED HOLES FOR TRIM AND INDICATE IN SUBMITTAL. REMOVABLE STAINLESS STEEL BASKET STRAINERS AND TAILPIECE.	DELTA "9182" ["RP47274"], BRASS CONSTRUCTION, CHROME-PLATED FINISH, SINGLE HANDLE GOOSENECK FAUCET, SWIVEL SPOUT, 9 3/8" REACH, 1.8 GPM AERATOR, TWO FUNCTION WAND OPERATION, 20" BRAIDED HOSE, ONE HOLE FAUCET [THREE HOLE FAUCET WITH DECK PLATE]. PROVIDE WITH 1/4 TURN, 3/8" BRASS [LOOSE KEY] STOPS.
SK-2 [LARGE SINGLE BOWL FOR BREAK ROOM]	ELKAY	ECTSR33229	SINGLE BOWL, UNDERMOUNT, 18-GAUGE STAINLESS STEEL, COMPLETELY UNDERCOATED, 33" SIDE TO SIDE x 22" FRONT TO BACK, 30-1/2" x 16-3/4" x 9" DEEP BOWL. VERIFY FINAL DIMENSIONS FROM ARCH ELEVATION AND MILWORK DRAWINGS. COORDINATE ALL REQUIRED HOLES FOR TRIM AND INDICATE IN SUBMITTAL. REMOVABLE STAINLESS STEEL BASKET STRAINER AND TAILPIECE.	ELKAY "LK3000CR" ["LK3001CR"], ADA, BRASS CONSTRUCTION, CHROME-PLATED FINISH, HIGH RISE SWIVEL FAUCET, 8" REACH, 2.2 GPM AERATOR, REMOTE SINGLE LEVER HANDLE, [CHROME PLATED SIDE SPRAY]. [TRUEBRO "102W, 105" CW, HW, AND WASTE PIPE GUARDS AND ESCUTCHEONS.] PROVIDE WITH 1/4 TURN, 3/8" BRASS [LOOSE KEY] STOPS.
SK-3 [MOLDED STONE]	FIAT	(FL-1)L-1(DL-1)	LAUNDRY TUB - SINGLE BOWL FLOOR(FL) MOLDED UNIT, DRAIN AND STOPPER, 20-1/4"x17-1/4"x13", WITH LEGS AND INTEGRAL LEVELING DEVICES.	FIAT "A1000" OR EQUIVALENT, 4" CENTERSET FAUCET, CHROME PLATED, METAL CONSTRUCTION, WITH 4" BLADE HANDLES, 6-3/4" SWING SPOUT, AERATOR AND HOSE ADAPTOR. PROVIDE WITH SCUTCHEONS, 1/4 TURN BRASS STOPS.
TP-1	SIOUX CHIEF	695 SERIES	MECHANICAL TRAP PRIMER. BRASS-PLATED CAP AND BODY. UPC/IAPMO LISTED. ACTIVATION WITH 10PSIG PRESSURE DOP WITH FACTORY SET WATER RELEASE. 1/2" FIP INLET AND 1/2" MIP OUTLET.	NA
WC-1 (TANK)	KOHLER	K-3978	FLOOR MOUNTED 1.6 GPF, WHITE VITREOUS CHINA, ELONGATED BOWL, SIPHON JET TOILET, BOLT CAPS, FLOAT VALVE WITH VACUUM BREAKER, CHROME-PLATED TRIP LEVER, [VANDAL RESISTANT LOCKING TANK COVER]. STANDARD BOWL HEIGHT. TRIP LEVER SHALL BE ON WIDE SIDE OF TOILET. REFER TO PLANS FOR RIGHT HAND / LEFT HAND. INDICATE QUANTITIES OF RIGHT HAND / LEFT HAND TRIP LEVERS ON SUBMITTAL.	CHURCH 295SSCT WHITE OPEN FRONT SELF-SUSTAINING HEAVY SEAT, INJECTION MOLDED PLASTIC, STAINLESS STEEL POSTS, ESCUTCHEON & WAX RING. PROVIDE WITH 1/4 TURN, 3/8" BRASS LOOSE-KEY STOP.
WCO-1	ZURN	Z1446	WALL CLEANOUT TEE, GAS AND WATERTIGHT ABS TAPERED THREAD PLUG, AND ROUND, SMOOTH STAINLESS STEEL WALL ACCESS COVER WITH SECURING SCREW.	NA

NOTES:

1. REFER TO PLUMBING FIXTURE ROUGH-IN SCHEDULE FOR MINIMUM CONNECTION SIZES.

PLUMBING FIXTURE ROUGH-IN SCHEDULE

FIXTURE	CW	HW	VENT	WASTE	NOTES
EMERGENCY EYEWASH	1/2"	1/2"	1 1/2"	1 1/2"	1,2,3
FLOOR DRAIN	-	-	1 1/2"	2"	1
LAVATORY	1/2"	1/2"	1 1/4"	1 1/4"	1,2
SINK	1/2"	1/2"	1 1/2"	1 1/2"	1,2
SHOWER	1/2"	1/2"	1 1/2"	2"	1,5
WATER CLOSET (TANK TYPE)	1/2"	-	2"	4"	1

NOTES:

1. ALL SIZES SHOWN ARE MINIMUM CONNECITON SIZES, REFER TO DRAWINGS FOR FINAL SIZES.
2. ALL VERTICAL WASTE RISERS TO FIXTURES AND ALL BELOW FLOOR WASTE SIZES SHALL BE A MINIMUM OF 2".
3. CW/HW TO MIXING VALVE. TEPID WATER FROM MIXING VALVE.
4. FOR TEMPERED WATER SHOWER, EXTEND 3/4" TW TO ASSEMBLY.

PLUMBING PIPING AND INSULATION SCHEDULE

SYSTEM	SIZE RANGE (INCHES)	LOCATION	PIPE MATERIAL (NOTE 1)	JOINT TYPE (NOTE 1)	VALVE TYPES (NOTE 3)	INSULATION TYPE (NOTE 2)	INSULATION THICKNESS (INCHES)	JACKET (NOTE 4)	NOTES
COIL CONDENSATE DRAIN	1/2 - 3	INSIDE BLDG	TYPE M COPPER	SOLDER/PRESSURE SEAL	N/A	MINERAL FIBER / ELASTOMERIC	1/2	--	
COIL CONDENSATE DRAIN	1/2 - 3	ROOF	SCH 40 PVC DWV	SOLVENT WELD	N/A	MINERAL FIBER / ELASTOMERIC	1/2	--	
DOMESTIC COLD WATER	3/4 - 1 1/4	ABOVE GROUND	TYPE L COPPER	SOLDER/PRESSURE SEAL	BRONZE BALL W/ SS TRIM	MINERAL FIBER / ELASTOMERIC	1/2	PVC	5
DOMESTIC COLD WATER	3/4 - 1 1/4	IN WALL CAVITY	PEX	METAL INSERT		MINERAL FIBER / ELASTOMERIC	1/2	--	
DOMESTIC COLD WATER	1 1/2 - 2	ABOVE GROUND	TYPE L COPPER	SOLDER/PRESSURE SEAL	BRONZE BALL W/ SS TRIM	MINERAL FIBER / ELASTOMERIC	1	PVC	5
DOMESTIC HOT WATER	3/4 - 1 1/4	ABOVE GROUND	TYPE L COPPER	SOLDER/PRESSURE SEAL	BRONZE BALL W/ SS TRIM	MINERAL FIBER / ELASTOMERIC	1	PVC	5
DOMESTIC HOT WATER	3/4 - 1 1/4	IN WALL CAVITY	PEX	METAL INSERT		MINERAL FIBER / ELASTOMERIC	1	--	
DOMESTIC HOT WATER	1 1/2 - 2	ABOVE GROUND	TYPE L COPPER	SOLDER/PRESSURE SEAL	BRONZE BALL W/ SS TRIM	MINERAL FIBER	1 1/2	--	5
DOMESTIC HOT WATER CIRC	3/4 - 1 1/4	ABOVE GROUND	TYPE L COPPER	SOLDER/PRESSURE SEAL	BRONZE BALL W/ SS TRIM	MINERAL FIBER / ELASTOMERIC	1	PVC	5
DOMESTIC HOT WATER CIRC	3/4 - 1 1/4	IN WALL CAVITY	PEX	METAL INSERT		MINERAL FIBER / ELASTOMERIC	1	--	
DOMESTIC WATER	2 - 8	BELOW GROUND	DUCTILE IRON	MECHANICAL / PUSH ON	GATE / BUTTERFLY	--	--	--	
LIQUID PROPANE	3/4 - 2	ABOVE GROUND	SCH 40 STEEL	THREADED	BRONZE BALL / PLUG	--	--	--	
SANITARY DRAIN (GRAVITY)	1 1/2 - 8	BELOW GROUND	SCH 40 PVC DWV / CI	SOLVENT / HUB & SPIGOT	N/A	--	--	--	
SANITARY VENT PIPING	1 1/4 - 4	BELOW GROUND	SCH 40 PVC DWV / CI	SOLVENT / HUB & SPIGOT	N/A	--	--	--	
SANITARY DRAIN (GRAVITY)	1 1/2 - 8	ABOVE GROUND	SCH 40 PVC DWV / CI	SOLVENT / NO HUB	N/A	--	--	--	
SANITARY VENT PIPING	1 1/4 - 6	ABOVE GROUND	SCH 40 PVC DWV / CI	SOLVENT / NO HUB	N/A	MINERAL FIBER	1	--	5,6

NOTES:

1. ALL PIPING UTILIZED FOR POTABLE WATER SHALL MEET NSF 14, 61 AND 372. PUSH TO CONNECT / PUSH ON TYPE JOINTS ARE NOT ALLOWED. REFER TO SPECIFICATIONS FOR FURTHER JOINT AND MATERIAL REQUIREMENTS.
2. REFER TO SPECIFICATIONS FOR FURTHER INSULATION REQUIREMENTS. INSULATION R-VALUE SHALL MEET 2019 ASHRAE 90.1 REQUIREMENTS.
3. ALL VALVES UTILIZED IN POTABLE WATER SYSTEMS SHALL MEET NSF 61 AND 372. REFER TO SPECIFICATIONS FOR FURTHER VALVE REQUIREMENTS.
4. EXPOSED PIPING MOUNTED BELOW 6'-0" ABOVE FLOOR SHALL HAVE A PVC JACKET.
5. INSULATION APPLIED TO PIPING THAT IS LOCATED IN RETURN AIR PLENUMS SHALL MEET ASTM E 84 25/50 FLAME AND SMOKE SPREAD RATING AND COMPLY WITH NFPA STANDARD 90A.
6. VENT PIPING SHALL BE INSULATED A MINIMUM OF 5'-0" FROM EXTERIOR WALL OR ROOF PENETRATION.

ZCS ENGINEERING ARCHITECTURE
127 NW D Street, Grants Pass, Oregon 97526 | 541-479-3865

REEDSPORT FIRE DISTRICT
124 N 4TH ST.
REEDSPORT, OR 97467

REEDSPORT FIRE STATION 7

KCL ENGINEERING
199 E 5th Ave, Suite 35
Eugene, OR
97401
503-212-4612

REGISTERED PROFESSIONAL ENGINEER
98664
OREGON
MAR. 8, 2022
CHARLES WHITE
EXPIRES: 6/30/2024

△	DATE:	Description

PROJECT NO.	G-1468-21
DRAWN:	JDH
CHECKED:	SKG
DATE:	01-26-23

PLUMBING SCHEDULES

P3.1

100% CONSTRUCTION DOCUMENTS | BID / PERMIT SET

ONE INCH EQUALS FULL SCALE 4/26/2023 1:03:12 AM

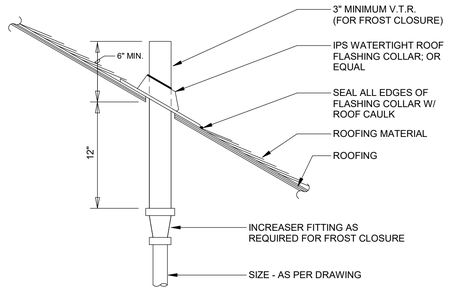

10 / P2.1 PLUMBING VENT THRU PITCHED ROOF DETAIL
NTS

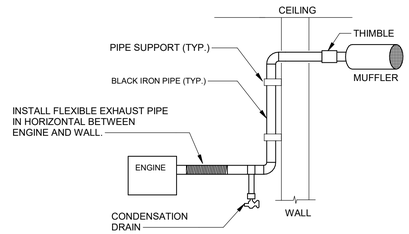

EXHAUST PIPE SIZING TABLE:	
ENGINE EXHAUST HOLE SIZE:	EXHAUST PIPE SIZE:
1/2"	1"
3/4"	1-1/4"
1"	1-1/2"
1-1/4"	2"

7 / P2.1 ELECTRIC WATER HEATER DETAIL
NTS

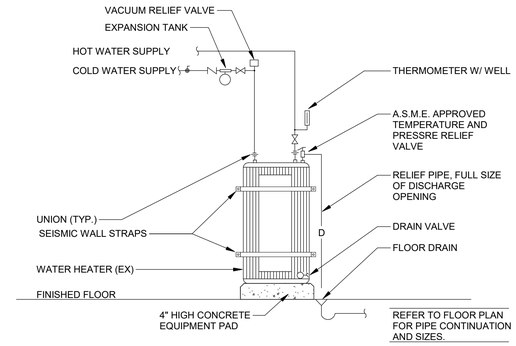

4 / P2.1 ELECTRIC WATER HEATER DETAIL
NTS

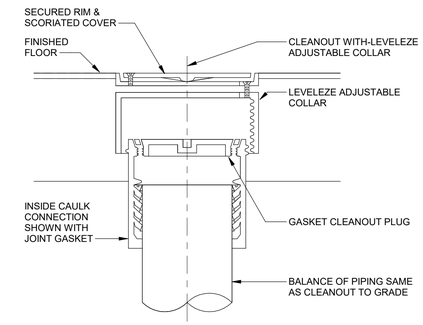

1 / P2.1 FLOOR CLEANOUT DETAIL
NTS

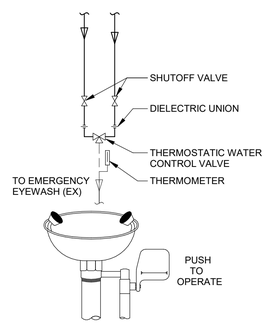

8 / P2.1 EMERGENCY EYEWASH DETAIL
NTS

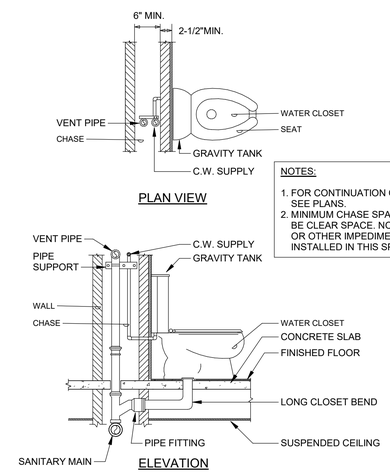

NOTES:

1. FOR CONTINUATION OF PIPING SEE PLANS.
2. MINIMUM CHASE SPACE SHOWN MUST BE CLEAR SPACE. NO STEEL STUDS OR OTHER IMPEDIMENTS CAN BE INSTALLED IN THIS SPACE.

5 / P2.1 FLOOR MOUNTED SINGLE WATER CLOSET DETAIL
NTS

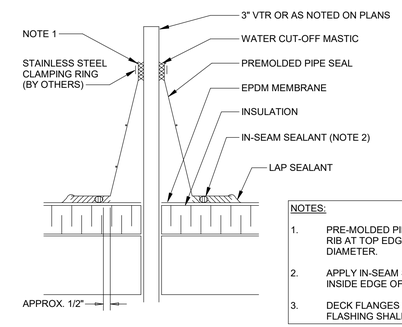

NOTES:

1. PRE-MOLDED PIPE SEAL MUST HAVE INTACT RIB AT TOP EDGE, REGARDLESS OF PIPE DIAMETER.
2. APPLY IN-SEAM SEALANT 1/2 INCH FROM INSIDE EDGE OF PIPE SEAL FLANGE.
3. DECK FLANGES OF THE PRE-MOLDED PIPE FLASHING SHALL NOT BE OVERLAPPED.

2 / P2.1 PLUMBING VENT THROUGH EPDM ROOF DETAIL
NTS

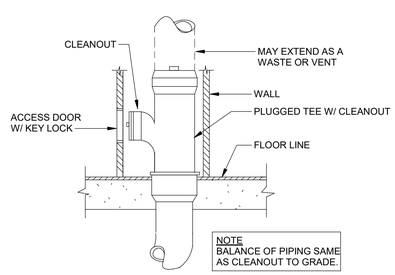

NOTE
BALANCE OF PIPING SAME AS CLEANOUT TO GRADE.

9 / P2.1 WALL CLEANOUT DETAIL
NTS

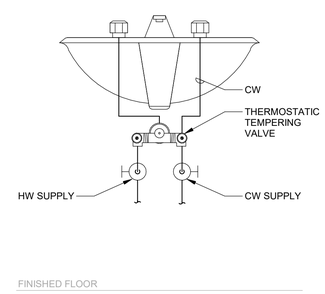

6 / P2.1 POINT-OF-USE MIXING VALVE DETAIL
NTS

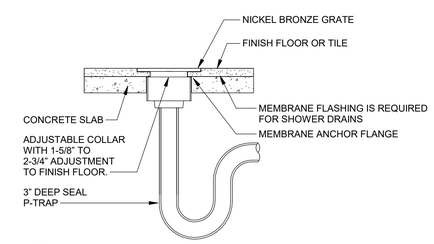

3 / P2.1 FLOOR DRAIN DETAIL
NTS

ZCS ENGINEERING ARCHITECTURE
127 NW D Street, Grants Pass,
Oregon 97526 | 541-479-3865

REEDSPORT FIRE DISTRICT
124 N 4TH ST.
REEDSPORT, OR 97467

REEDSPORT FIRE STATION 7

KCL ENGINEERING
199 E 5th Ave, Suite 35
Eugene, OR
97401
503-212-4612

REGISTERED PROFESSIONAL ENGINEER
#98664
OREGON
MAR 8, 2022
CHARLES WHITE
EXPIRES: 6/30/2024

△	DATE:	Description

PROJECT NO.	G-1468-21
DRAWN:	JDH
CHECKED:	SKG
DATE:	01-26-23

PLUMBING DETAILS

P2.1

100% CONSTRUCTION DOCUMENTS | BID / PERMIT SET

ONE INCH EQUALS FULL SCALE 4/26/2023 1:03:11 AM

GENERAL NOTES - ELECTRICAL

A. COORDINATE LOCATION/INSTALLATION OF MECHANICAL AND ELECTRICAL WORK WITH ALL OTHER TRADES. DO NOT PROCEED WITH SYSTEM INSTALLATION OR ROUGH-IN UNTIL PROPER AND TIMELY COORDINATION HAS OCCURRED WITH ALL TRADES ASSOCIATED WITH THE INSTALLATION. COORDINATION ITEMS INCLUDE BUT ARE NOT LIMITED TO THE FOLLOWING: BUILDING STRUCTURE, SHEET METAL, PIPING SYSTEMS, LIGHT FIXTURES, CONDUITS, CABLE TRAYS. REFER TO ALL GENERAL, MECHANICAL, AND ELECTRICAL DRAWINGS AND SPECIFICATIONS FOR THIS PROJECT. CONCTRACTOR IS RESPONSIBLE FOR EXPENSES ASSOCIATED WITH REWORK OF INSTALLED EQUIPMENT OR SYSTEMS NOT COORDINATED IN THE FIELD.

B. ELECTRICAL DRAWINGS ARE ONLY A PORTION OF THE COMPLETE SET OF PLANS AND CONTRACT DOCUMENTS. THE ELECTRICAL SCOPE OF WORK IS DEFINED BY THE COMPLETE SET OF CONTRACT DOCUMENTS. THIS INCLUDES BUT IS NOT LIMITED TO REFERENCING; ARCHITECTURAL PLANS FOR DIMENSIONS AND DETAILS; EQUIPMENT PLANS FOR ROUGH-IN REQUIREMENTS, MECHANICAL PLANS FOR EQUIPMENT SIZES AND LOCATIONS.

CODE NOTES - ELECTRICAL

A. PROVIDE ELECTRICAL INSTALLATION IN ACCORDANCE WITH ALL LOCAL, STATE, AND NATIONAL CODES.

B. THE CURRENT ADOPTED EDITION OF THE ELECTRICAL CODE SHALL BE THE STANDARD FOR THE ELECTRICAL INSTALLATION. VERIFY WITH LOCAL OFFICIALS WHEN PERMITS ARE OBTAINED. NOTIFY DESIGN TEAM OF ANY DESCREPANCIES BETWEEN THE PROJECT MANUAL OR DRAWINGS AND THE GOVERNING CODE.

C. INSTALLATION SHALL FOLLOW REQUIREMENTS OF THE ADAAG – AMERICANS WITH DISABILITIES ACT.

D. REFER TO PROJECT MANUAL AND PROJECT CODE REVIEW SHEET FOR LIST OF APPLICABLE CODES.

DEMOLITION AND RENOVATION NOTES - ELECTRICAL

A. ELECTRICAL DEMOLITION DRAWINGS SHOWING EXISTING CONDITIONS HAVE BEEN PREPARED BASED ON FIELD OBSERVATION AND ORIGINAL DRAWINGS. ADDITIONAL COMPONENTS MAY EXIST WHICH ARE NOT SHOWN. HANDLE SUCH ITEMS IN A SIMILAR MANNER TO THOSE ITEMS WHICH ARE SHOWN.

B. BECOME FAMILIAR WITH EXISTING ELECTRICAL SYSTEM WHICH WILL BE AFFECTED BY THE DEMOLITION WORK.

C. PROVIDE EQUIPMENT, LABOR, AND MATERIALS TO REMOVE ELECTRICAL FACILITIES AND CLEAR THE AREA TO RECEIVE THE NEW WORK PROVIDED UNDER THIS CONTRACT.

D. IN OCCUPIED AREAS BEYOND THE DEMOLITION SCOPE, KEEP EXISTING SYSTEMS NOT AFFECTED BY PROJECT SCOPE OPERATIONAL THROUGH THE DURATION OF THE PROJECT. OBTAIN PERMISSION FROM OWNER'S REPRESENTATIVE TO SHUT OFF SERVICES OR SYSTEMS WHICH MAY AFFECT OTHER AREAS BEYOND THE LIMITS OF THE DEMOLITION AREA. INFORM OWNER'S REPRESENTATIVE OF THE REASON FOR AND DURATION OF THE SHUTDOWN AND ENSURE THAT THE SHUTDOWN IS MADE WITH AS LITTLE INCONVENIENCE TO OTHER AREAS AS POSSIBLE.

E. REMOVE CONDUITS, BOXES, ETC. AS REQUIRED BY WALL, CEILING, AND ADJACENT COMPONENTS DEMOLITION. REMOVE EXISTING WIRE UNLESS OTHERWISE NOTED.

F. INSTALL NEW CONDUCTORS FOR NEW CIRCUITS IN REMODELED AREAS UNLESS SPECIFICALLY NOTED OTHERWISE. RETAIN EXISTING CONDUITS IN GOOD CONDITION WHERE APPROVED BY ENGINEER OR AS INDICATED.

G. IDENTIFY DISCONNECTED BRANCH CIRCUIT LOCATION OR ITEM SERVED BEFORE DISCONNECTION. UPDATE PANEL/EQUIPMENT DIRECTORY ACCORDINGLY.

H. MAINTAIN CIRCUITS SERVING AREAS BEYOND THE DEMOLITION AREA. EXTEND NEW WIRING AND BYPASS DEMOLISHED DEVICES TO MAINTAIN EXISTING CIRCUITS.

I. KEEP EXISTING SYSTEMS OPERATIONAL DURING ALL PHASES OF CONSTRUCTION. DO NOT CUT EXISTING TELECOMMUNICATION WIRING, CABLES OR CONDUIT. CONTRACTORS WHO CUT IN-SERVICE CABLES ARE RESPONSIBLE FOR ALL DOWNTIME AND COSTS TO REPAIR.

J. INSTALL BLANK COVER PLATES OVER OPENING AT REMOVED DEVICE LOCATIONS. THIS INCLUDES BUT IS NOT LIMITED TO, CLOCKS, RECEPTACLES, SWITCHES, JUNCTION BOXES, ETC.

K. PROVIDE CUTTING AND PATCHING OF EXISTING MATERIALS AS REQUIRED FOR THE PROPER COMPLETION OF THE DEMOLITION WORK AND THE INSTALLATION OF THE NEW WORK.

L. MAINTAIN FULL FUNCTIONAL AND AESTHETIC INTEGRITY OF DEVICES IDENTIFIED AS REMOVE/RELOCATE AND HANDLE WITH APPROPRIATE CARE TO ALLOW FOR REINSTALLATION. REPLACE DEVICES DAMAGED DURING DEMOLITION WITH NEW AT CONTRACTOR'S EXPENSE.

M. REMOVED EQUIPMENT AND SYSTEMS REMAINS THE PROPERTY OF THE OWNER UNLESS OTHERWISE NOTED. DISPOSE OF ALL MATERIALS NOT SALVAGED BY THE OWNER.

N. REMOVE AND REINSTALL CEILING TILES REQUIRED FOR THE WORK BEING DONE UNDER THIS CONTRACT. REPLACE CEILING TILES DAMAGED DURING CONSTRUCTION TO MATCH EXISTING.

DEVICE INSTALLATION AND MATERIALS - ELECTRICAL

A. PROVIDE NORMAL WIRING DEVICES AS GRAY UNLESS OTHERWISE NOTED.

B. PROVIDE EMERGENCY WIRING DEVICES AS RED UNLESS OTHERWISE NOTED.

C. PROVIDE DEVICES COVER PLATES AS STAINLESS STEEL. MATCH WIRING DEVICES COLOR.

D. PROVIDE GFCI TYPE RECEPTACLES AT ALL LOCATIONS REQUIRED BY THE NEC.

E. INSTALL WALL MOUNTED RECEPTACLES AT +18" ABOVE FINISHED FLOOR UNLESS OTHERWISE NOTED.

F. INSTALL WALL MOUNTED LIGHT SWITCHES AT +46" ABOVE FINISHED FLOOR UNLESS OTHERWISE NOTED. EXCEPTION; INSTALL DEVICES ABOVE AN OBSTRUCTED HIGH FORWARD REACH OBSTACLE GREATER THEN 20 INCHES IN DEPTH AT +42".

G. INSTALL ABOVE COUNTERTOP RECEPTACLES +8" ABOVE COUNTERTOP OR AS OTHERWISE INDICATED.

H. AT A COMMON COUNTERTOP, INSTALL ALL RECEPTACLES AND SWITCHES AT THE SAME HEIGHT UNLESS OTHERWISE SPECIFICALLY INDICATED.

ELECTRICAL ABBREVIATIONS

A	DEVICE MOUNTED +8" ABOVE COUNTER TOP (VERIFY LOCATION)	NIC	NOT IN CONTRACT
AFF	ABOVE FINISHED FLOOR	NM	NONMETALLIC
ATS	AUTOMATIC TRANSFER SWITCH	NTS	NOT TO SCALE
C	CEILING	OC	ON CENTER
CB	CIRCUIT BREAKER	OFCI	OWNER FURNISHED CONTRACTOR INSTALLED
CT	CURRENT TRANSFORMER	OFOI	OWNER FURNISHED, OWNER INSTALLED
E	EXISTING ITEM TO REMAIN	R	EXISTING ITEM TO BE REMOVED
EC	ELECTRICAL CONTRACTOR	RR	EXISTING ITEM TO BE REMOVED AND RELOCATED
EM	EMERGENCY LIGHT FIXTURE	RN	EXISTING ITEM TO BE REMOVED AND REPLACED WITH NEW
ER	NEW LOCATION OF EXISTING ITEM	SCCR	SHORT CIRCUIT CURRENT RATING
F	ROUGH IN FOR FUTURE DEVICE	T	TAMPER PROOF DEVICE
FAAP	FIRE ALARM ANNUNCIATOR PANEL	TCC	TEMPERATURE CONTROL CONTRACTOR
FACP	FIRE ALARM CONTROL PANEL	TV	TELEVISION
FSD	FIRE SMOKE DAMPER	TYP	TYPICAL
G	GROUND FAULT CIRCUIT INTERRUPTER	UPS	UNINTERRUPTIBLE POWER SUPPLY
GND	GROUND	V	VOLTS
KVA	KILO-VOLT-AMPERES	VA	VOLT-AMPERES
KW	KILOWATTS	WG	WIREGUARD COVER
MC	MECHANICAL CONTRACTOR	WP	WEATHERPROOF DEVICE
MCB	MAIN CIRCUIT BREAKER	WR	WEATHER RESISTANT DEVICE
MDP	MAIN DISTRIBUTION PANEL	+24"	INDICATES MOUNTING HEIGHT CENTER LINE OF DEVICE TO FINISHED FLOOR
MLO	MAIN LUGS ONLY		
N	NEW DEVICE IN EXISTING LOCATION		

INSTALLATION NOTES - ELECTRICAL

A. BECOME FAMILIAR WITH EXISTING CONDITIONS PRIOR TO BID.

B. INCREASE CONDUCTOR SIZES ON 20A 120V-1 PHASE CIRCUITS EXCEEDING 100 FEET TO CENTER OF LOAD TO ACCOUNT FOR VOLTAGE DROP.

C. RACEWAYS AND BOXES ARE SHOWN DIAGRAMMATICALLY ONLY AND INDICATE GENERAL AND APPROXIMATE LOCATIONS. LAYOUTS DO NOT ALWAYS SHOW THE TOTAL NUMBER OF RACEWAYS OR BOXES FOR THE CIRCUITS REQUIRED, NOR ARE THE LOCATIONS OF INDICATED RUNS INTENDED TO SHOW THE ACTUAL ROUTING OF THE RACEWAYS.

D. LIGHT FIXTURES, SWITCHES, DEVICES, ETC. ARE SHOWN IN PREFERRED LOCATION. E.C. IS RESPONSIBLE FOR MODIFYING CONDUIT, HANGERS, CIRCUITING, ETC. TO PROVIDE A COMPLETE AND OPERATIONAL SYSTEM.

E. PROVIDE A DEDICATED GREEN INSULATED GROUND CONDUCTOR TO ALL DEVICES. DO NOT UTILIZE CONDUIT SYSTEM AS THE ONLY EQUIPMENT GROUNDING METHOD.

F. DO NOT INSTALL BOXES BACK TO BACK ON OPPOSITE SIDES OF THE SAME WALL. MAINTAIN MINIMUM OF 8" DISTANCE BETWEEN BOXES WHEREVER APPLICABLE.

G. BALANCE PANEL LOADS DURING INSTALLATION. CIRCUIT NUMBERING SHOWN ON PLANS MAY BE ADJUSTED TO ACCOMODATE.

H. PROVIDE TYPED PANEL DIRECTORY AT PROJECT COMPLETION FOR NEW PANELS AND EXISTING PANELS WITH CIRCUITS MODIFIED AS A RESULT OF THIS PROJECT. UTLIZE OWNER'S CURRENT ROOM NUMBERS AND EQUIPMENT NAMES AND RECEIVE APPROVAL PRIOR TO FINAL PLACEMENT.

I. CONTRACTOR IS RESPONSIBLE FOR OPENINGS IN WALLS CREATED BY THEIR WORK. PENETRATIONS SHALL BE SEALED IN ACCORDANCE WITH THE RATINGS OF THE AFFECTED WALL. REFER TO ARCHITECTURAL CODE PLAN FOR RATED WALLS.

INSTALLATION NOTES - LIGHTING

A. UNLESS NOTED OTHERWISE, CONNECT ALL EMERGENCY BATTERY FIXTURES WITH AN UNSWITCHED LEG OF THE LIGHTING CIRCUIT THAT SERVES THE FIXTURES SPACE. MAINTAIN NORMAL SWITCHING SCHEME OF EMERGENCY FIXTURES UNDER NORMAL OPERATION. INSTALL PER EMERGENCY FIXTURE OR TRANSFER DEVICE INSTRUCTIONS.

B. VERIFY CEILING TYPE (IE. GRID, GYP) WITH ARCHITECTURAL REFLECTED CEILING PLANS PRIOR TO RELEASE OF LIGHTING FIXTURE EQUIPMENT PACKAGE. ADJUST FIXTURE TYPE, CONSTRUCTION, FLANGE, OR OTHER COORDINATION DETAILS AS REQUIRED FOR CEILING TYPE.

C. LIGHTING CONTROLS SENSORS ARE SHOWN ON PLANS AT SUGGESTED LOCATIONS ONLY. VERIFY LOCATIONS WITH MANUFACTURER GUIDELINES AND INSTALLATION RECOMMENDATIONS. ADJUST LOCATIONS AS REQURIED TO MEET MANUFACTURER GUIDELINES.

D. PROVIDE LIGHTING CONTROLS AS A COMPLETE SYSTEM AND INCLUDE MATERIAL AND INSTALLATION FOR ALL POWER PACKS, ACCESSORIES, CONTROLLERS, AND WIRING REQUIRED FOR OPERATION.

PROJECT DELIVERY NOTES - ELECTRICAL

A. THE DELIVERY METHOD FOR THIS PROJECT IS INDIVIDUAL BID PACKAGES COORDINATED AND ADMINISTERED BY A GENERAL CONTRACTOR. THIS CONTRACTOR IS RESPONSIBLE FOR MEETING WITH ALL BID PACKAGE CONTRACTORS TO COORDINATE LOCATIONS AND INSTALLATION OF MECHANICAL AND ELECTRICAL WORK WITH ALL OTHER TRADES. ANY REWORK OF INSTALLED EQUIPMENT WILL BE AT CONTRACTOR'S EXPENSE.

INSTALLATION NOTES - SYSTEMS

A. REFER TO TECHNOLOGY SERIES SHEETS FOR ROUGH-IN REQUIREMENTS.

B. REFER TO ELECTRICAL/TECHNOLOGY SCOPE OF RESPONSIBILITY MATRIX.

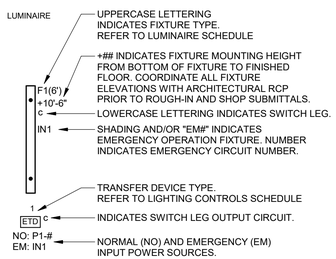

POWER SYMBOLS

- SINGLE RECEPTACLE, WALL MOUNT +18", OR AS NOTED
- DUPLEX RECEPTACLE, CEILING MOUNT
- DUPLEX RECEPTACLE, TAMPER-RESISTANT, WALL MOUNT +18", OR AS NOTED
- SR — DUPLEX RECEPTACLE, SURFACE RACEWAY, WALL MOUNT +18", OR AS NOTED
- G — DUPLEX GFCI RECEPTACLE, TAMPER-RESISTANT, WALL MOUNT +18", OR AS NOTED
- EWC — DUPLEX RECEPTACLE, MOUNTED WITHIN WATER COOLER HOUSING, VERIFY HEIGHT. CONNECT TO GFCI, CIRCUIT BREAKER OR REMOTE WALL DEVICE.
- W — DUPLEX GFCI WEATHER RESISTANT RECEPTACLE WITH WEATHER-PROOF IN-USE COVER, TAMPER-RESISTANT, WALL MOUNT +24", OR AS NOTED
- QUADRAPLEX RECEPTACLE, TAMPER-RESISTANT, WALL MOUNT +18", OR AS NOTED
- QUADRAPLEX GFCI RECEPTACLE, TAMPER-RESISTANT, WALL MOUNT +18", OR AS NOTED
- SPECIAL RECEPTACLE, WALL MOUNT +18", OR AS NOTED, REFER TO ELECTRICAL EQUIPMENT CONNECTION SCHEDULE FOR RECEPTACLE TYPE
- SPECIAL RECEPTACLE, CEILING MOUNT, REFER TO ELECTRICAL EQUIPMENT CONNECTION SCHEDULE FOR RECEPTACLE TYPE
- EQUIPMENT CONNECTION, REFER TO ELECTRICAL EQUIPMENT CONNECTION SCHEDULE FOR CONNECTION TYPE
- EQUIPMENT CONNECTION, WALL MOUNT +18", OR AS NOTED, REFER TO ELECTRICAL EQUIPMENT CONNECTION SCHEDULE FOR CONNECTION TYPE
- J — JUNCTION BOX, WITH PULL STRING, WALL MOUNT, REFER TO PLAN OR DETAIL FOR MOUNTING HEIGHT
- D — HAND DRYER, WALL MOUNT, REFER TO ARCHITECTURAL ELEVATIONS FOR MOUNTING HEIGHT.
- GROUND BAR
- SAFETY DISCONNECT SWITCH
- PLUG STRIP, SURFACE MOUNTED. ELEVATION AS NOTED.
- PANELBOARD - SURFACE MOUNTED
- PANELBOARD - RECESSED IN WALL
- DISTRIBUTION PANELBOARD/SWITCHBOARD - SURFACE MOUNTED AS NOTED.
- CORD REEL, CEILING MOUNTED - REFER TO DETAIL
- GEN — GENERATOR

GENERAL SYMBOLS

- CONDUIT SLEEVE
- CONDUIT UP, REFER TO TAG ON DRAWING FOR SIZE
- CONDUIT DOWN, REFER TO TAG ON DRAWING FOR SIZE
- J — JUNCTION BOX, CEILING OR FLOOR MOUNTED.
- J — JUNCTION BOX, WALL MOUNTED, ELEVATION AS NOTED.
- CIRCUIT HOMERUN, CONCEALED CONDUIT OR CABLE
- CIRCUIT HOMERUN, UNDER FLOOR CONDUIT OR CABLE
- # — KITCHEN EQUIPMENT TAG NUMBER. REFER TO KITCHEN EQUIPMENT CONNECTION SCHEDULE
- # — KEYNOTE
- XXX X — EQUIPMENT IDENTIFICATION TAG. REFER TO EQUIPMENT CONNECTION SCHEDULE
- 1 A101 SIM — DETAIL DRAWING REFERENCE TAG, SIM-SIMILAR, TYP-TYPICAL, OPP-OPPOSITE; SHEET REFERENCE
- 1 A101 SIM — SECTION CUT REFERENCE TAG, SIM-SIMILAR, TYP-TYPICAL, OPP-OPPOSITE; SHEET REFERENCE
- A101 1 Ref — INTERIOR ELEVATION DRAWING REFERENCE TAG

LIGHTING SYMBOLS

- ROUND LIGHT FIXTURE - SURFACE MOUNTED
- SQUARE LIGHT FIXTURE - SURFACE MOUNTED
- PENDANT MOUNTED LIGHT FIXTURE
- ROUND APERTURE RECESSED DOWNLIGHT FIXTURE, ARROW INDICATES WALLWASH
- SQUARE APERTURE RECESSED DOWNLIGHT FIXTURE, ARROW INDICATES WALLWASH
- SURFACE MOUNTED STRIP FIXTURE
- EMERGENCY LIGHT FIXTURE, WALL MOUNT, +96" OR AS NOTED
- EMERGENCY LIGHT FIXTURE, CEILING MOUNT
- EXIT SIGN, WALL MOUNT +96", SHADED AREAS INDICATE NUMBER OF FACES, ARROWS INDICATE SIGN ARROWS
- EXIT SIGN, CEILING MOUNT, SHADED AREAS INDICATE NUMBER OF FACES, ARROWS INDICATE SIGN ARROWS
- COMBINATION EXIT SIGN & EMERGENCY LIGHT, WALL MOUNT +96", SHADED AREAS INDICATE NUMBER OF FACES, ARROWS INDICATE SIGN ARROWS
- COMBINATION EXIT SIGN & EMERGENCY LIGHT, CEILING MOUNT, SHADED AREAS INDICATE NUMBER OF FACES, ARROWS INDICATE SIGN ARROWS
- EXTERIOR LIGHT FIXTURE, WALL MOUNT +10', OR AS NOTED
- INTERIOR LIGHT FIXTURE, WALL MOUNT
- EXTERIOR POLE MOUNTED LIGHT FIXTURE, REFER TO LIGHT FIXTURE SCHEDULE
- $ a — SINGLE POLE SWITCH, WALL MOUNT +48", OR AS NOTED, LETTER INDICATES SWITCH LEG
- 3 $ b — THREE WAY SWITCH, WALL MOUNT +48", OR AS NOTED, LETTER INDICATES SWITCH LEG
- P $ c — PILOT LIGHT SWITCH, WALL MOUNT +48", OR AS NOTED, LETTER INDICATES SWITCH LEG
- D $ d — DIMMER SWITCH, WALL MOUNT +48", OR AS NOTED, LETTER INDICATES SWITCH LEG
- S1 e — LIGHTING CONTROLS LOW VOLTAGE SWITCH, WALL MOUNT +48", OR AS NOTED, LETTER INDICATES SWITCH LEG, REFER TO LIGHTING CONTROLS SCHEDULE
- 1 c — OCCUPANCY SENSOR, WALL MOUNT +48" OR AS NOTED, NUMBER INDICATES TYPE, LETTER INDICATES SWITCH LEG, REFER TO LIGHTING CONTROLS SCHEDULE
- 2 a — OCCUPANCY SENSOR, CEILING MOUNT, NUMBER INDICATES TYPE, LETTER INDICATES SWITCH LEG, REFER TO LIGHTING CONTROLS SCHEDULE
- 2 — DAYLIGHTING SENSOR, CEILING MOUNT, NUMBER INDICATES TYPE, LETTER INDICATES SWITCH LEG, REFER TO LIGHTING CONTROLS SCHEDULE
- LIGHTING CONNECTION, REFER TO LIGHTING FIXTURE SCHEDULE FOR FIXTURE DESCRIPTION
- ETD — EMERGENCY TRANSFER DEVICE

NOT ALL SYMBOLS ARE USED

ZCS ENGINEERING ARCHITECTURE
127 NW D Street, Grants Pass, Oregon 97526 | 541-479-3865

REEDSPORT FIRE DISTRICT
124 N 4TH ST.
REEDSPORT, OR 97467

REEDSPORT FIRE STATION 7

KCL ENGINEERING
199 E 5th Ave, Suite 35
Eugene, OR
97401
503-212-4612

REGISTERED PROFESSIONAL ENGINEER 97568 OREGON SEP 14, 2021 SHYLA KEAYS-GOODMAN

EXPIRES: 6/30/2023

△	DATE:	Description

PROJECT NO.	G-1468-21
DRAWN:	JDH
CHECKED:	SKG
DATE:	01-26-23

ELECTRICAL GENERAL NOTES & SYMBOLS

E0.1

100% CONSTRUCTION DOCUMENTS | BID / PERMIT SET

ONE INCH EQUALS FULL SCALE

4/26/2023 1:02:57 AM

GENERAL SYMBOLS

- CONDUIT SLEEVE
- CONDUIT UP, REFER TO TAG ON DRAWING FOR SIZE
- CONDUIT DOWN, REFER TO TAG ON DRAWING FOR SIZE
- JUNCTION BOX, CEILING OR FLOOR MOUNTED.
- JUNCTION BOX, WALL MOUNTED, ELEVATION AS NOTED.
- CIRCUIT HOMERUN, CONCEALED CONDUIT OR CABLE
- CIRCUIT HOMERUN, UNDER FLOOR CONDUIT OR CABLE
- # — KITCHEN EQUIPMENT TAG NUMBER, REFER TO KITCHEN EQUIPMENT CONNECTION SCHEDULE
- # — KEYNOTE
- XXX / X — EQUIPMENT IDENTIFICATION TAG. REFER TO EQUIPMENT CONNECTION SCHEDULE
- 1 / A101 SIM — DETAIL DRAWING REFERENCE TAG, SIM-SIMILAR, TYP-TYPICAL, OPP-OPPOSITE; SHEET REFERENCE
- 1 / A101 SIM — SECTION CUT REFERENCE TAG, SIM-SIMILAR, TYP-TYPICAL, OPP-OPPOSITE; SHEET REFERENCE
- A101 / 1 Ref — INTERIOR ELEVATION DRAWING REFERENCE TAG

POWER SYMBOLS

- SINGLE RECEPTACLE, WALL MOUNT +18", OR AS NOTED
- DUPLEX RECEPTACLE, CEILING MOUNT
- DUPLEX RECEPTACLE, TAMPER-RESISTANT, WALL MOUNT +18", OR AS NOTED
- SR — DUPLEX RECEPTACLE, SURFACE RACEWAY, WALL MOUNT +18", OR AS NOTED
- G — DUPLEX GFCI RECEPTACLE, TAMPER-RESISTANT, WALL MOUNT +18", OR AS NOTED
- EWC — DUPLEX RECEPTACLE, MOUNTED WITHIN WATER COOLER HOUSING, VERIFY HEIGHT. CONNECT TO GFCI, CIRCUIT BREAKER OR REMOTE WALL DEVICE.
- W — DUPLEX GFCI WEATHER RESISTANT RECEPTACLE WITH WEATHER-PROOF IN-USE COVER, TAMPER-RESISTANT, WALL MOUNT +24", OR AS NOTED
- QUADRAPLEX RECEPTACLE, TAMPER-RESISTANT, WALL MOUNT +18", OR AS NOTED
- QUADRAPLEX GFCI RECEPTACLE, TAMPER-RESISTANT, WALL MOUNT +18", OR AS NOTED
- SPECIAL RECEPTACLE, WALL MOUNT +18", OR AS NOTED, REFER TO ELECTRICAL EQUIPMENT CONNECTION SCHEDULE FOR RECEPTACLE TYPE
- SPECIAL RECEPTACLE, CEILING MOUNT, REFER TO ELECTRICAL EQUIPMENT CONNECTION SCHEDULE FOR RECEPTACLE TYPE
- EQUIPMENT CONNECTION, REFER TO ELECTRICAL EQUIPMENT CONNECTION SCHEDULE FOR CONNECTION TYPE
- EQUIPMENT CONNECTION, WALL MOUNT +18", OR AS NOTED, REFER TO ELECTRICAL EQUIPMENT CONNECTION SCHEDULE FOR CONNECTION TYPE
- JUNCTION BOX, WITH PULL STRING, WALL MOUNT, REFER TO PLAN OR DETAIL FOR MOUNTING HEIGHT
- HAND DRYER, WALL MOUNT, REFER TO ARCHITECTURAL ELEVATIONS FOR MOUNTING HEIGHT.
- GROUND BAR
- SAFETY DISCONNECT SWITCH
- PLUG STRIP, SURFACE MOUNTED. ELEVATION AS NOTED.
- PANELBOARD - SURFACE MOUNTED
- PANELBOARD - RECESSED IN WALL
- DISTRIBUTION PANELBOARD/SWITCHBOARD - SURFACE MOUNTED AS NOTED.
- CORD REEL, CEILING MOUNTED - REFER TO DETAIL
- GEN — GENERATOR

LIGHTING SYMBOLS

- ROUND LIGHT FIXTURE - SURFACE MOUNTED
- SQUARE LIGHT FIXTURE - SURFACE MOUNTED
- PENDANT MOUNTED LIGHT FIXTURE
- ROUND APERTURE RECESSED DOWNLIGHT FIXTURE, ARROW INDICATES WALLWASH
- SQUARE APERTURE RECESSED DOWNLIGHT FIXTURE, ARROW INDICATES WALLWASH
- SURFACE MOUNTED STRIP FIXTURE
- EMERGENCY LIGHT FIXTURE, WALL MOUNT, +96" OR AS NOTED
- EMERGENCY LIGHT FIXTURE, CEILING MOUNT
- EXIT SIGN, WALL MOUNT +96", SHADED AREAS INDICATE NUMBER OF FACES, ARROWS INDICATE SIGN ARROWS
- EXIT SIGN, CEILING MOUNT, SHADED AREAS INDICATE NUMBER OF FACES, ARROWS INDICATE SIGN ARROWS
- COMBINATION EXIT SIGN & EMERGENCY LIGHT, WALL MOUNT +96", SHADED AREAS INDICATE NUMBER OF FACES, ARROWS INDICATE SIGN ARROWS
- COMBINATION EXIT SIGN & EMERGENCY LIGHT, CEILING MOUNT, SHADED AREAS INDICATE NUMBER OF FACES, ARROWS INDICATE SIGN ARROWS
- EXTERIOR LIGHT FIXTURE, WALL MOUNT +10', OR AS NOTED
- INTERIOR LIGHT FIXTURE, WALL MOUNT
- EXTERIOR POLE MOUNTED LIGHT FIXTURE, REFER TO LIGHT FIXTURE SCHEDULE
- $ a — SINGLE POLE SWITCH, WALL MOUNT +48", OR AS NOTED, LETTER INDICATES SWITCH LEG
- 3 $ b — THREE WAY SWITCH, WALL MOUNT +48", OR AS NOTED, LETTER INDICATES SWITCH LEG
- P $ c — PILOT LIGHT SWITCH, WALL MOUNT +48", OR AS NOTED, LETTER INDICATES SWITCH LEG
- D $ d — DIMMER SWITCH, WALL MOUNT +48", OR AS NOTED, LETTER INDICATES SWITCH LEG
- S1 e — LIGHTING CONTROLS LOW VOLTAGE SWITCH, WALL MOUNT +48", OR AS NOTED, LETTER INDICATES SWITCH LEG, REFER TO LIGHTING CONTROLS SCHEDULE
- 1 c — OCCUPANCY SENSOR, WALL MOUNT +48" OR AS NOTED, NUMBER INDICATES TYPE, LETTER INDICATES SWITCH LEG, REFER TO LIGHTING CONTROLS SCHEDULE
- 2 a — OCCUPANCY SENSOR, CEILING MOUNT, NUMBER INDICATES TYPE, LETTER INDICATES SWITCH LEG, REFER TO LIGHTING CONTROLS SCHEDULE
- 2 — DAYLIGHTING SENSOR, CEILING MOUNT, NUMBER INDICATES TYPE, LETTER INDICATES SWITCH LEG, REFER TO LIGHTING CONTROLS SCHEDULE
- LIGHTING CONNECTION, REFER TO LIGHTING FIXTURE SCHEDULE FOR FIXTURE DESCRIPTION
- ETD — EMERGENCY TRANSFER DEVICE

ZCS ENGINEERING ARCHITECTURE
127 NW D Street, Grants Pass,
Oregon 97526 | 541-479-3865

REEDSPORT FIRE DISTRICT
124 N 4TH ST.
REEDSPORT, OR 97467

REEDSPORT FIRE STATION 7

KCL ENGINEERING
199 E 5th Ave, Suite 35
Eugene, OR
97401
503-212-4612

REGISTERED PROFESSIONAL ENGINEER 97568 OREGON SEP. 14, 2021 SHYLA KEAYS-GOODMAN
EXPIRES: 6/30/2023

△	DATE:	Description

PROJECT NO.	G-1468-21
DRAWN:	JDH
CHECKED:	SKG
DATE:	01-26-23

ELECTRICAL GENERAL NOTES & SYMBOLS

E0.2

100% CONSTRUCTION DOCUMENTS | BID / PERMIT SET

ONE INCH EQUALS FULL SCALE 4/26/2023 1:02:57 AM

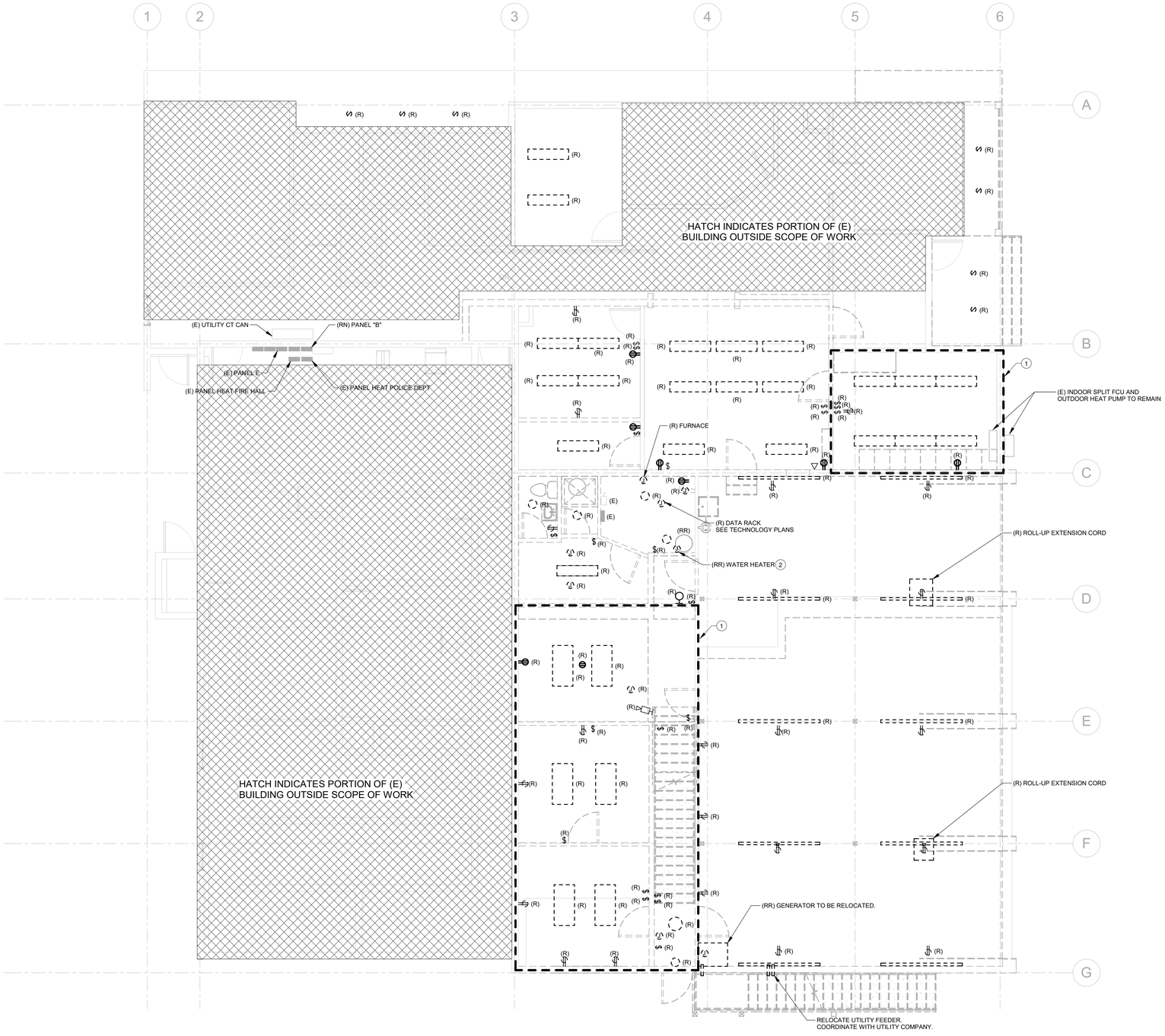

1 ELECTRICAL - FIRST FLOOR PLAN DEMO
ED1.1 3/16" = 1'-0"

ELECTRICAL DEMOLITION NOTES

A. DEMOLITION DRAWINGS PRESENT LAYOUT OF EXISTING CONDITIONS AND MAJOR MECHANICAL/ELECTRICAL ITEMS. THEY ARE NOT TO BE CONSTRUED AS COMPLETE IN REPRESENTATION OF ACCESSORIES AND INCIDENTALS TO BE REMOVED, REPLACED, OR REWORKED. NOR SHOULD ACCESSIBILITY BE INFERRED. THE CONTRACTOR IS RESPONSIBLE TO FAMILIARIZE THEMSELVES WITH THE BUILDING AND EXISTING CONDITIONS, PRIOR TO THE SUBMITTING OF A BID FOR THIS PROJECT.

B. REMOVE ELECTRICAL FACILITIES AND CLEAR THE AREA TO RECEIVE THE NEW WORK TO BE PROVIDED UNDER THIS CONTRACT.

C. THIS ELECTRICAL DEMOLITION DRAWING SHOWING EXISTING CONDITIONS HAS BEEN PREPARED BASED ON FIELD OBSERVATION AND ORIGINAL DRAWINGS. ADDITIONAL COMPONENTS MAY EXIST WHICH DO NOT SHOW, AND SUCH ITEMS SHALL BE DEALT WITH IN A MANNER SIMILAR TO THOSE ITEMS WHICH DO SHOW. CONTRACTOR SHALL VISIT THE SITE AND BECOME FAMILIAR WITH EXISTING CONDITIONS.

D. CONDUITS, BOXES, ETC., SHALL BE REMOVED AS REQUIRED BY WALL AND CEILING DEMOLITION AND REMOVALS. WIRING SHALL BE REMOVED. ALL WIRING FOR THE REMODELED AREAS SHALL BE NEW UNLESS SPECIFICALLY NOTED OTHERWISE. ALL BRANCH CIRCUITS TO BE DISCONNECTED SHALL BE IDENTIFIED AS TO LOCATION OR ITEM SERVED BEFORE DISCONNECTING. CIRCUITS SERVING AREAS BEYOND THE IMMEDIATE DEMOLITION AREA SHALL BE MAINTAINED.

E. CONTRACTOR SHALL THOROUGHLY FAMILIARIZE HIMSELF WITH EXISTING ELECTRICAL SYSTEM WHICH WILL BE AFFECTED BY THE DEMOLITION WORK. CONTRACTOR SHALL OBTAIN PERMISSION FROM OWNER'S REPRESENTATIVE TO SHUT OFF SERVICES OR SYSTEMS WHICH MAY AFFECT OTHER AREAS BEYOND THE LIMITS OF THE IMMEDIATE DEMOLITION AREA. SUCH PERMISSION WILL BE GRANTED ONLY AFTER OWNER'S REPRESENTATIVE IS INFORMED OF THE REASON FOR AND DURATION OF THE SHUTDOWN AND IS SATISFIED THAT THE SHUTDOWN CAN BE MADE WITH AS LITTLE INCONVENIENCE TO OTHER AREAS AS POSSIBLE.

F. PANELBOARDS, DISCONNECTS, FIXTURES, WIRING DEVICES, SIGNAL DEVICES, ETC., SHOWN ON PLANS SHALL BE REMOVED UNLESS NOTED OTHERWISE. REMOVAL SHALL BE DONE IN A TIMELY MANNER IN ACCORDANCE WITH THE GENERAL DEMOLITION WORK. COORDINATE WITH THE OWNER AND OTHER CONTRACTORS.

G. ABBREVIATIONS:
- (E) - EXISTING ITEM TO REMAIN
- (R) - DEMOLISHED ITEM
- (ER) - NEW LOCATION OF EXISTING ITEM
- (N) - NEW ITEM IN EXISTING LOCATION
- (R) - EXISTING ITEM TO BE REMOVED, PATCH AND/OR COVER
- (RN) - REPLACE EXISTING WITH NEW
- (RR) - EXISTING ITEM TO BE REMOVED AND RELOCATED

KEYNOTES (#)

1 ITEM(S) PART OF REMODEL SCOPE OF WORK AND NOT RELATED TO THE SEISMIC RETROFIT. ALL BIDS SHALL CONTAIN SEPARATE LINE ITEM PRICING WHICH DISTINGUISHES REMODEL SCOPE OF WORK FROM SEISMIC RETROFIT SCOPE OF WORK.

2 MAINTAIN AND PROTECT EXISTING BRANCH CIRCUIT FOR RECONNECTION TO RELOCATED EQUIPMENT. REFER TO NEW WORK PLANS FOR NEW EQUIPMENT LOCATION.

ZCS ENGINEERING ARCHITECTURE
127 NW D Street, Grants Pass, Oregon 97526 | 541-479-3865

REEDSPORT FIRE DISTRICT
124 N 4TH ST.
REEDSPORT, OR 97467

REEDSPORT FIRE STATION 7

KCL ENGINEERING
199 E 5th Ave, Suite 35
Eugene, OR
97401
503-212-4612

REGISTERED PROFESSIONAL ENGINEER 97568 OREGON SEP 14, 2021 SHYLA KEAYS-GOODMAN
EXPIRES: 6/30/2023

△	DATE:	Description

PROJECT NO.	G-1468-21
DRAWN:	JDH
CHECKED:	SKG
DATE:	01-26-23

DEMO FIRST FLOOR PLAN - ELECTRICAL

ED1.1

100% CONSTRUCTION DOCUMENTS | BID / PERMIT SET

ONE INCH EQUALS FULL SCALE 4/26/2023 1:03:01 AM

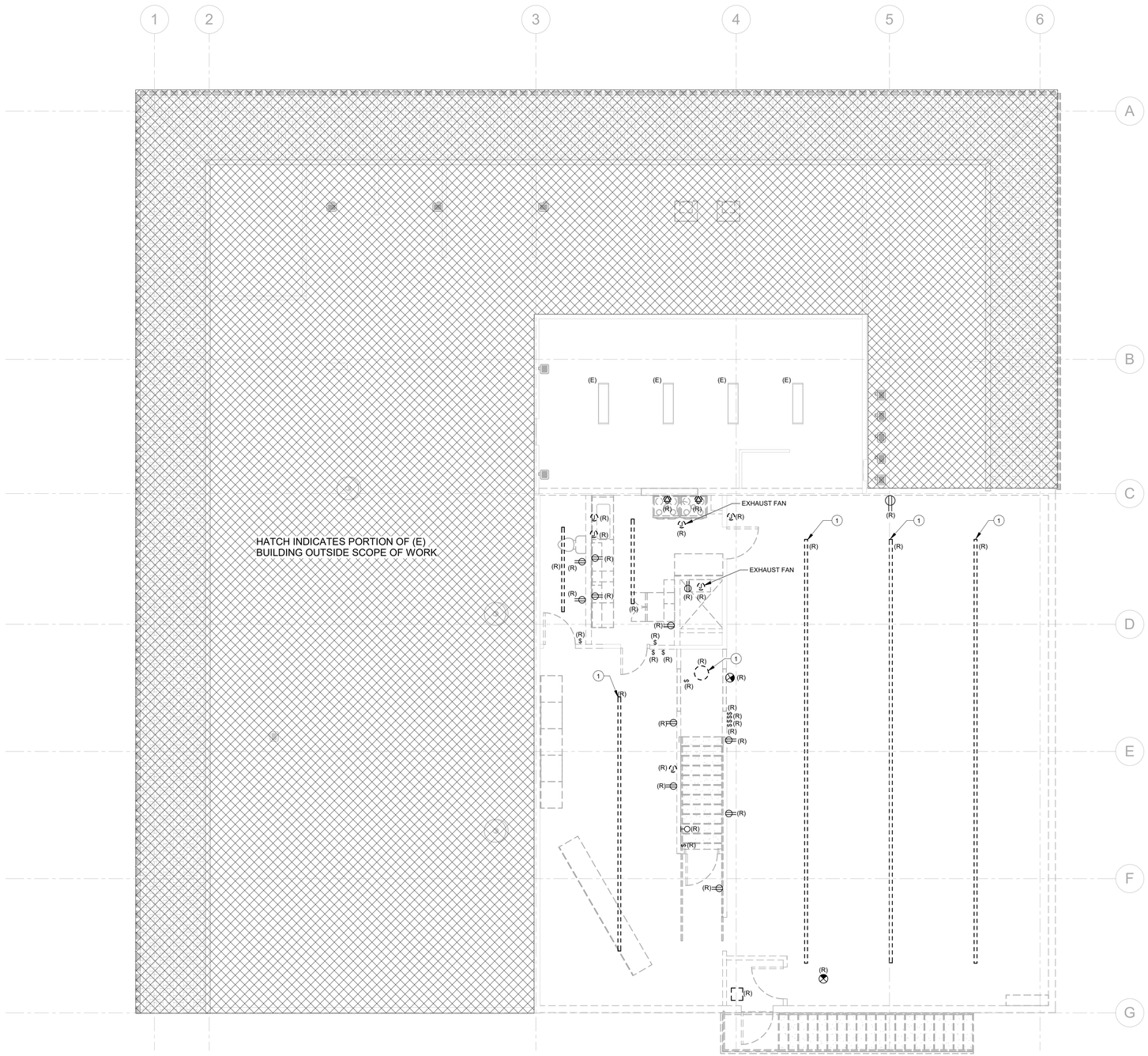

1 ED1.2 ELECTRICAL - SECOND FLOOR PLAN DEMO

3/16" = 1'-0"

ELECTRICAL DEMOLITION NOTES

A. DEMOLITION DRAWINGS PRESENT LAYOUT OF EXISTING CONDITIONS AND MAJOR MECHANICAL/ELECTRICAL ITEMS. THEY ARE NOT TO BE CONSTRUED AS COMPLETE IN REPRESENTATION OF ACCESSORIES AND INCIDENTALS TO BE REMOVED, REPLACED, OR REWORKED. NOR SHOULD ACCESSIBILITY BE INFERRED. THE CONTRACTOR IS RESPONSIBLE TO FAMILIARIZE THEMSELVES WITH THE BUILDING AND EXISTING CONDITIONS, PRIOR TO THE SUBMITTING OF A BID FOR THIS PROJECT.

B. REMOVE ELECTRICAL FACILITIES AND CLEAR THE AREA TO RECEIVE THE NEW WORK TO BE PROVIDED UNDER THIS CONTRACT.

C. THIS ELECTRICAL DEMOLITION DRAWING SHOWING EXISTING CONDITIONS HAS BEEN PREPARED BASED ON FIELD OBSERVATION AND ORIGINAL DRAWINGS. ADDITIONAL COMPONENTS MAY EXIST WHICH DO NOT SHOW, AND SUCH ITEMS SHALL BE DEALT WITH IN A MANNER SIMILAR TO THOSE ITEMS WHICH DO SHOW. CONTRACTOR SHALL VISIT THE SITE AND BECOME FAMILIAR WITH EXISTING CONDITIONS.

D. CONDUITS, BOXES, ETC., SHALL BE REMOVED AS REQUIRED BY WALL AND CEILING DEMOLITION AND REMOVALS. WIRING SHALL BE REMOVED. ALL WIRING FOR THE REMODELED AREAS SHALL BE NEW UNLESS SPECIFICALLY NOTED OTHERWISE. ALL BRANCH CIRCUITS TO BE DISCONNECTED SHALL BE IDENTIFIED AS TO LOCATION OR ITEM SERVED BEFORE DISCONNECTING. CIRCUITS SERVING AREAS BEYOND THE IMMEDIATE DEMOLITION AREA SHALL BE MAINTAINED.

E. CONTRACTOR SHALL THOROUGHLY FAMILIARIZE HIMSELF WITH EXISTING ELECTRICAL SYSTEM WHICH WILL BE AFFECTED BY THE DEMOLITION WORK. CONTRACTOR SHALL OBTAIN PERMISSION FROM OWNER'S REPRESENTATIVE TO SHUT OFF SERVICES OR SYSTEMS WHICH MAY AFFECT OTHER AREAS BEYOND THE LIMITS OF THE IMMEDIATE DEMOLITION AREA. SUCH PERMISSION WILL BE GRANTED ONLY AFTER OWNER'S REPRESENTATIVE IS INFORMED OF THE REASON FOR AND DURATION OF THE SHUTDOWN AND IS SATISFIED THAT THE SHUTDOWN CAN BE MADE WITH AS LITTLE INCONVENIENCE TO OTHER AREAS AS POSSIBLE.

F. PANELBOARDS, DISCONNECTS, FIXTURES, WIRING DEVICES, SIGNAL DEVICES, ETC., SHOWN ON PLANS SHALL BE REMOVED UNLESS NOTED OTHERWISE. REMOVAL SHALL BE DONE IN A TIMELY MANNER IN ACCORDANCE WITH THE GENERAL DEMOLITION WORK. COORDINATE WITH THE OWNER AND OTHER CONTRACTORS.

G. ABBREVIATIONS:
- (E) - EXISTING ITEM TO REMAIN
- (R) - DEMOLISHED ITEM
- (ER) - NEW LOCATION OF EXISTING ITEM
- (N) - NEW ITEM IN EXISTING LOCATION
- (R) - EXISTING ITEM TO BE REMOVED, PATCH AND/OR COVER
- (RN) - REPLACE EXISTING WITH NEW
- (RR) - EXISTING ITEM TO BE REMOVED AND RELOCATED

KEYNOTES (#)

1 ITEM(S) PART OF REMODEL SCOPE OF WORK AND NOT RELATED TO THE SEISMIC RETROFIT. ALL BIDS SHALL CONTAIN SEPARATE LINE ITEM PRICING WHICH DISTINGUISHES REMODEL SCOPE OF WORK FROM SEISMIC RETROFIT SCOPE OF WORK.

ZCS ENGINEERING ARCHITECTURE
127 NW D Street, Grants Pass, Oregon 97526 | 541-479-3865

REEDSPORT FIRE DISTRICT
124 N 4TH ST.
REEDSPORT, OR 97467

REEDSPORT FIRE STATION 7

KCL ENGINEERING
199 E 5th Ave, Suite 35
Eugene, OR
97401
503-212-4612

REGISTERED PROFESSIONAL ENGINEER 97568 OREGON SEP 14, 2021 SHYLA KEAYS-GOODMAN
EXPIRES: 6/30/2023

△	DATE:	Description

PROJECT NO.	G-1468-21
DRAWN:	JDH
CHECKED:	SKG
DATE:	01-26-23

DEMO SECOND FLOOR PLAN - ELECTRICAL

ED1.2

100% CONSTRUCTION DOCUMENTS | BID / PERMIT SET

ONE INCH EQUALS FULL SCALE

4/26/2023 1:03:01 AM

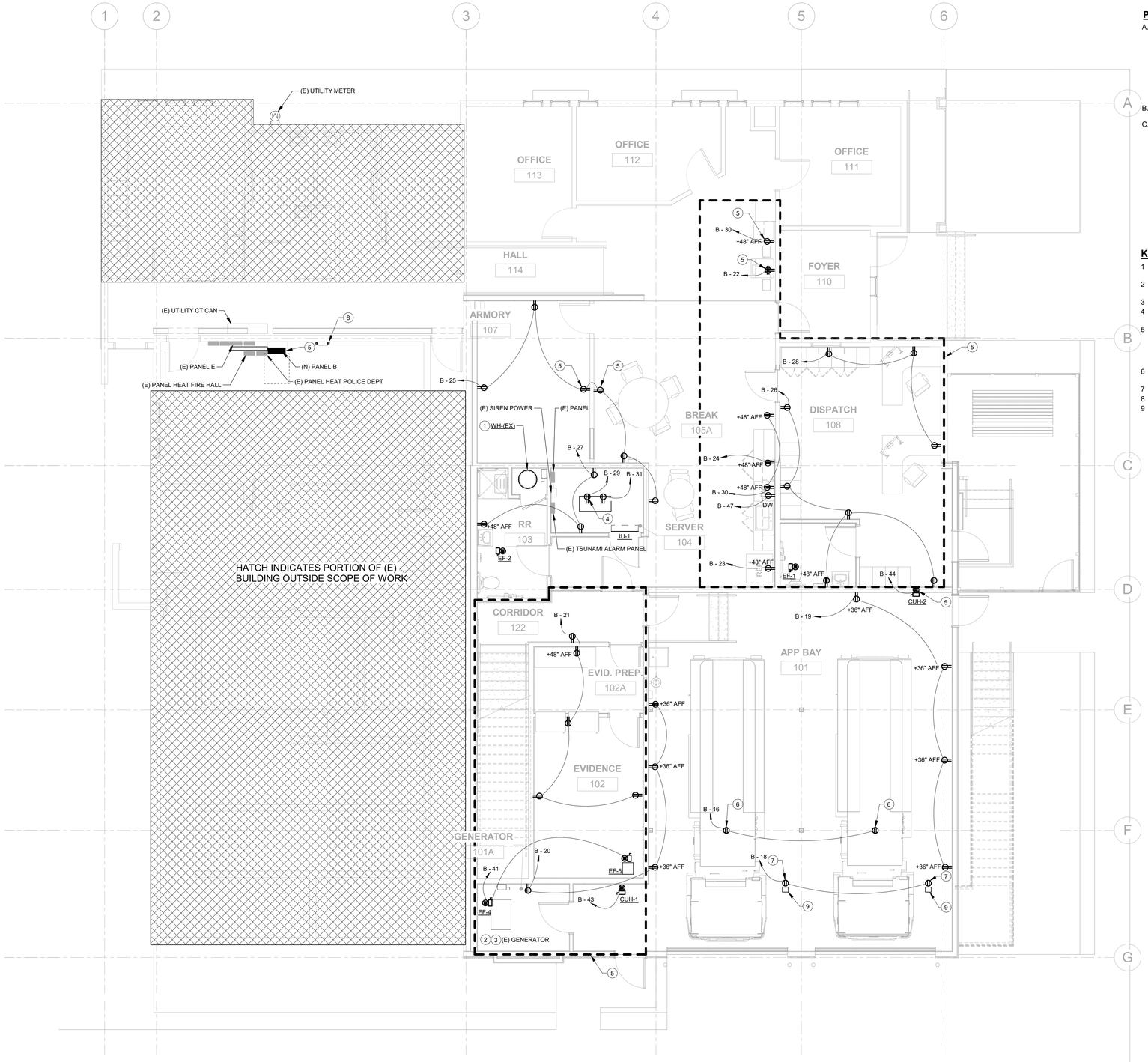

1 E1.1 ELECTRICAL - FIRST FLOOR PLAN
3/16" = 1'-0"

POWER GENERAL NOTES

A. COORDINATE LOCATION/INSTALLATION OF MECHANICAL AND ELECTRICAL WORK WITH ALL OTHER TRADES. NO ASPECT OF A SYSTEM INSTALLATION OR ITS ROUGH-IN SHALL COMMENCE UNTIL PROPER AND TIMELY COORDINATION WITH ALL TRADES ASSOCIATED WITH THE INSTALLATION HAS TRANSPIRED. ITEMS TO BE COORDINATED SHALL INCLUDE BUT NOT BE LIMITED TO: BUILDING STRUCTURE, SHEET METAL, PIPING SYSTEMS, LIGHT FIXTURES, CONDUITS, CABLE TRAYS, ETC. REFER TO ALL GENERAL, MECHANICAL, AND ELECTRICAL DRAWINGS AND SPECIFICATIONS FOR THIS PROJECT.

B. COORDINATE ELECTRICAL REQUIREMENTS FOR MECHANICAL UNITS WITH M.C. AND FINAL MECHANICAL SHOP DRAWINGS.

C. PROVIDE PENETRATIONS REQUIRED FOR ROUTING RACEWAYS THROUGH THE BUILDING. COORDINATE FIRE RATED WALL PENETRATIONS AND PROVIDE CONDUIT SLEEVES AND FIRE STOPPING TO MAINTAIN RATING.

KEYNOTES (#)

1 INTERCEPT AND EXTEND EXISTING WATER HEATER BRANCH CIRCUIT TO SERVE RELOCATED EQUIPMENT.

2 PROVIDE NEW GENERATOR FEEDER A 3/4"C - (2) #10 & (1) #12 GND TO SERVE RELOCATED EQUIPMENT.

3 COORDINATE FUEL PIPING REQUIREMENTS WITH PLUMBING.

4 PROVIDE (2) L5-20R RECEPTACLE RIGID MOUNTED TO THE PLANNED CABLE TRAY INSIDE THE ROOM.

5 ITEM(S) PART OF REMODEL SCOPE OF WORK AND NOT RELATED TO THE SEISMIC RETROFIT. ALL BIDS SHALL CONTAIN SEPARATE LINE ITEM PRICING WHICH DISTINGUISHES REMODEL SCOPE OF WORK FROM SEISMIC RETROFIT SCOPE OF WORK.

6 PROVIDE A CEILING RECEPTACLE FOR ROLLUP DOOR MOTOR.

7 PROVIDE A CEILING RECEPTACLE FOR POWER CORD REEL.

8 CONNECT GROUND BAR WITH SERVICE GROUNDING.

9 PROVIDE A CORD REEL. BASIS OF DESIGN: HUBBELL WHITE INDUSTRIAL CORD REEL WITH HBL2313, UL TYPE 1, 45 FT, #12/3 SJO, 20A, 125V CATALOG NUMBER HBLI45123TL20.

ZCS ENGINEERING ARCHITECTURE
127 NW D Street, Grants Pass, Oregon 97526 | 541-479-3865

REEDSPORT FIRE DISTRICT
124 N 4TH ST.
REEDSPORT, OR 97467

REEDSPORT FIRE STATION 7

KCL ENGINEERING
199 E 5th Ave, Suite 35
Eugene, OR
97401
503-212-4612

REGISTERED PROFESSIONAL ENGINEER 97568 OREGON SEP 14, 2021 SHYLA KEAYS-GOODMAN
EXPIRES: 6/30/2023

△	DATE:	Description

PROJECT NO.	G-1468-21
DRAWN:	JDH
CHECKED:	SKG
DATE:	01-26-23

FIRST FLOOR PLAN - POWER

E1.1

100% CONSTRUCTION DOCUMENTS | BID / PERMIT SET

ONE INCH EQUALS FULL SCALE 4/26/2023 1:02:58 AM

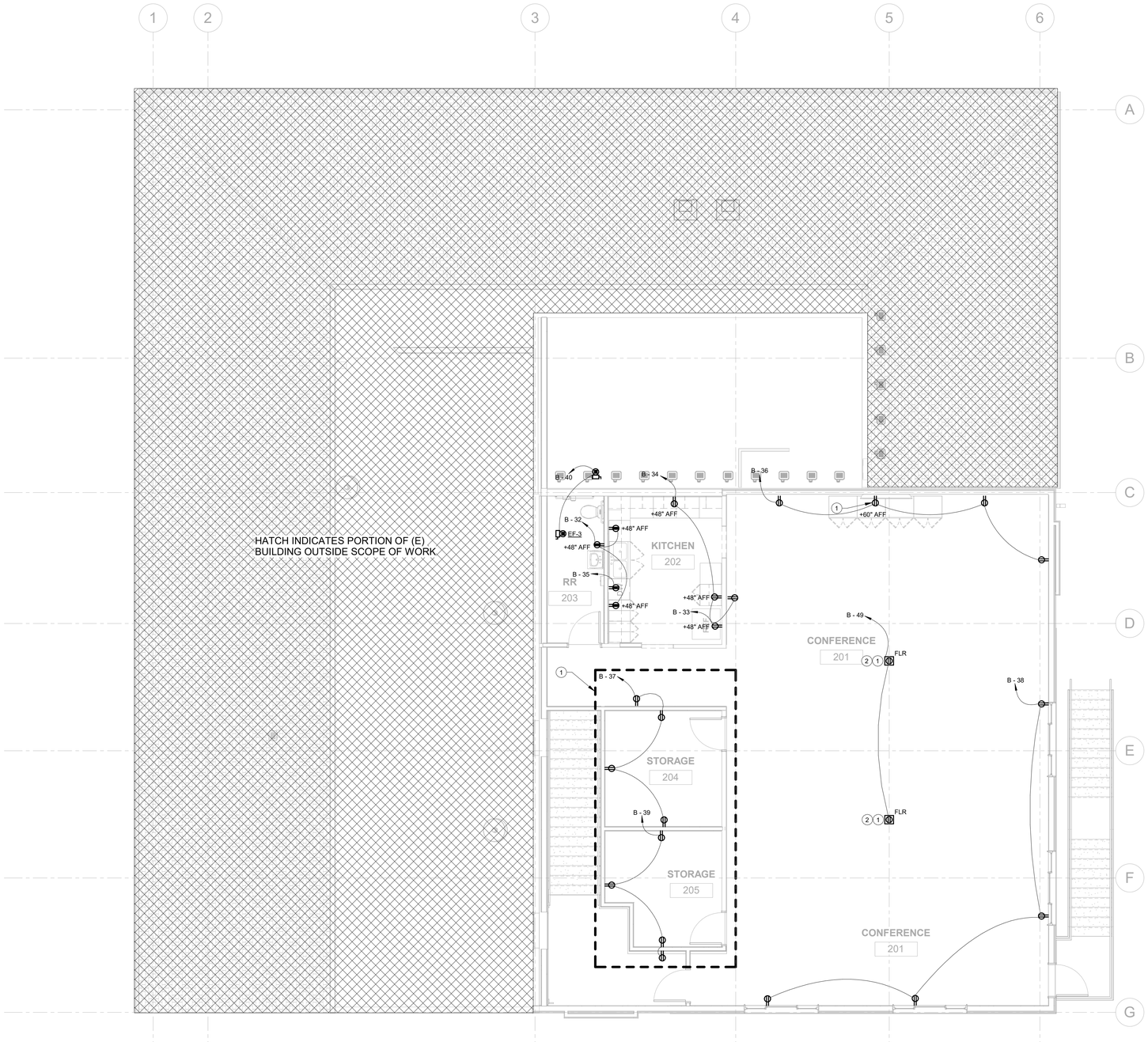

2 ELECTRICAL - SECOND FLOOR PLAN WITH WALLS
E1.2 3/16" = 1'-0"

POWER GENERAL NOTES

A. COORDINATE LOCATION/INSTALLATION OF MECHANICAL AND ELECTRICAL WORK WITH ALL OTHER TRADES. NO ASPECT OF A SYSTEM INSTALLATION OR ITS ROUGH-IN SHALL COMMENCE UNTIL PROPER AND TIMELY COORDINATION WITH ALL TRADES ASSOCIATED WITH THE INSTALLATION HAS TRANSPIRED. ITEMS TO BE COORDINATED SHALL INCLUDE BUT NOT BE LIMITED TO: BUILDING STRUCTURE, SHEET METAL, PIPING SYSTEMS, LIGHT FIXTURES, CONDUITS, CABLE TRAYS, ETC. REFER TO ALL GENERAL, MECHANICAL, AND ELECTRICAL DRAWINGS AND SPECIFICATIONS FOR THIS PROJECT.

B. COORDINATE ELECTRICAL REQUIREMENTS FOR MECHANICAL UNITS WITH M.C. AND FINAL MECHANICAL SHOP DRAWINGS.

C. PROVIDE PENETRATIONS REQUIRED FOR ROUTING RACEWAYS THROUGH THE BUILDING. COORDINATE FIRE RATED WALL PENETRATIONS AND PROVIDE CONDUIT SLEEVES AND FIRE STOPPING TO MAINTAIN RATING.

KEYNOTES (#)

1 ITEM(S) PART OF REMODEL SCOPE OF WORK AND NOT RELATED TO THE SEISMIC RETROFIT. ALL BIDS SHALL CONTAIN SEPARATE LINE ITEM PRICING WHICH DISTINGUISHES REMODEL SCOPE OF WORK FROM SEISMIC RETROFIT SCOPE OF WORK.

2 PROVIDE COMBINED POWER/DATA FLOOR BOX WITH DUPLEX RECEPTACLE, 2-PORT DATA OUTLET, 1-GANG RESERVED FOR HDMI CABLEPASS-THRU (OR CAPPED AS SPARE IF UNUSED). REFER TO TECHNOLOGY DRAWINGS FOR ADDITIONAL INFORMATION. BASIS OF DESIGN IS LEGRAND EVOLUTION SERIES 6" POKE-THRU FLOOR BOX WITH SURFACE-STYLE DIE-CAST ALUMINUM COVER ASSEMBLY. CONFIRM FINISHES WITH ARCHITECT PRIOR TO PROCUREMENT.

ZCS ENGINEERING ARCHITECTURE
127 NW D Street, Grants Pass, Oregon 97526 | 541-479-3865

REEDSPORT FIRE DISTRICT
124 N 4TH ST.
REEDSPORT, OR 97467

REEDSPORT FIRE STATION 7

KCL ENGINEERING
199 E 5th Ave, Suite 35
Eugene, OR
97401
503-212-4612

REGISTERED PROFESSIONAL ENGINEER
97568
OREGON
SEP. 14, 2021
SHYLA KEAYS-GOODMAN
EXPIRES: 6/30/2023

△	DATE:	Description

PROJECT NO.	G-1468-21
DRAWN:	JDH
CHECKED:	SKG
DATE:	01-26-23

SECOND FLOOR PLAN - POWER

E1.2

100% CONSTRUCTION DOCUMENTS | BID / PERMIT SET

ONE INCH EQUALS FULL SCALE 4/26/2023 1:02:58 AM

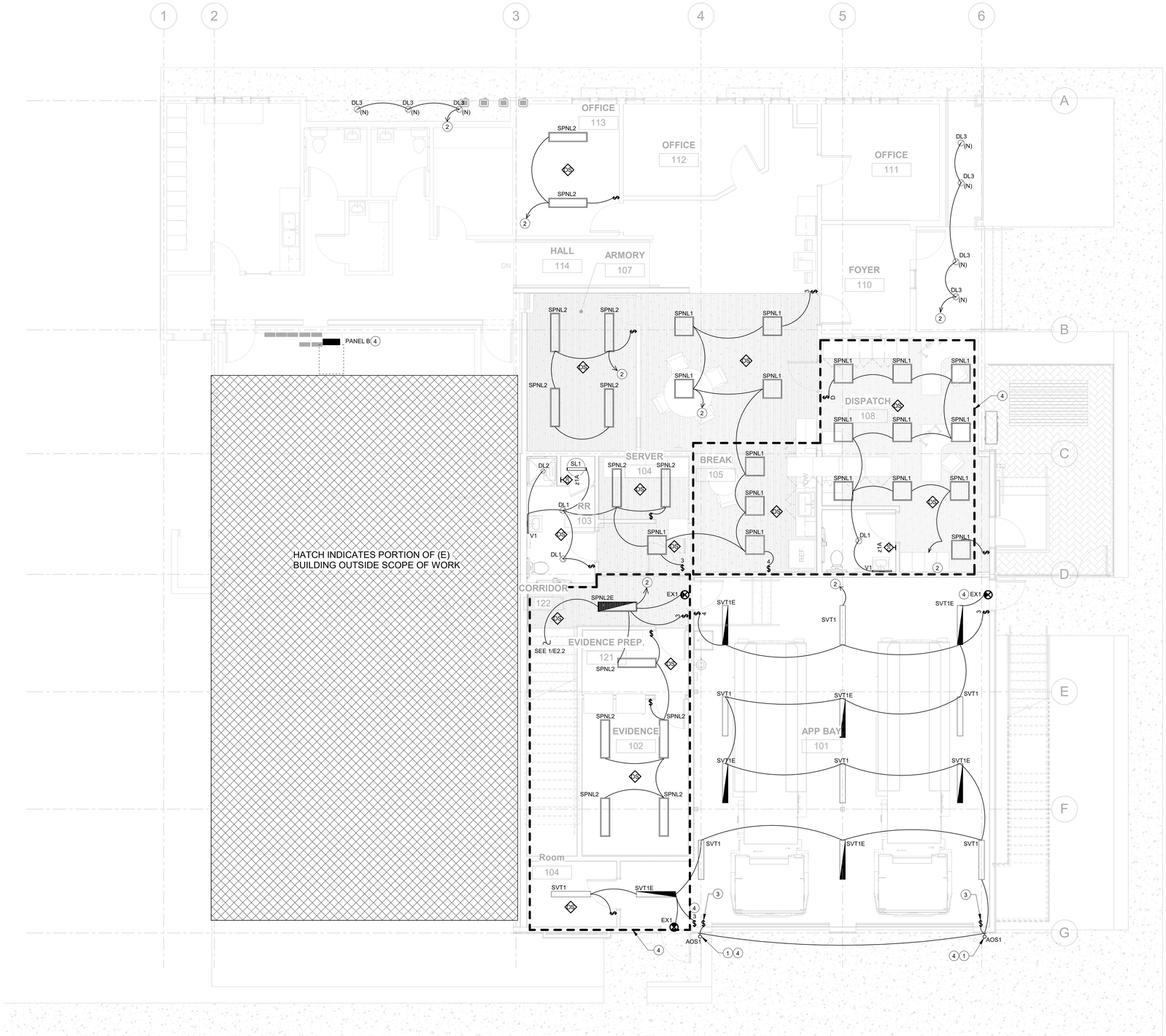

1 E2.1 ELECTRICAL LIGHTING - FIRST FLOOR PLAN
3/16" = 1'-0"

LIGHTING GENERAL NOTES

A. COORDINATE LOCATION/INSTALLATION OF MECHANICAL AND ELECTRICAL WORK WITH ALL OTHER TRADES. NO ASPECT OF A SYSTEM INSTALLATION OR ITS ROUGH-IN SHALL COMMENCE UNTIL PROPER AND TIMELY COORDINATION WITH ALL TRADES ASSOCIATED WITH THE INSTALLATION HAS TRANSPIRED. ITEMS TO BE COORDINATED SHALL INCLUDE BUT NOT BE LIMITED TO: BUILDING STRUCTURE, SHEET METAL, ALL PIPING SYSTEMS, LIGHT FIXTURES, CONDUITS, CABLE TRAYS, ETC. REFER TO ALL GENERAL, MECHANICAL, AND ELECTRICAL DRAWINGS AND SPECIFICATIONS FOR THIS PROJECT.

KEYNOTES (#)

1 INSTALL LUMINAIRE 8FT AFF. INTERLOCK LUMINAIRE WITH ROLLUP DOOR OPERATOR. WHEN THE ROOLUP DOOR OPENS LUMINAIRE IS "ON", AND WHEN THE ROLLUP CLOSES THE LUMINAIRE IS "OFF".

2 INTERCEPT AND EXTEND EXISTING BRANCH CIRCUIT AND CONNECT TO NEW LIGHTING AND CONTROLS.

3 PROVIDE MANUAL OVERRIDE SWITCH "ON/OFF" FOR LUMINAIRE TYPE "AOS1".

4 ITEM(S) PART OF REMODEL SCOPE OF WORK AND NOT RELATED TO THE SEISMIC RETROFIT. ALL BIDS SHALL CONTAIN SEPARATE LINE ITEM PRICING WHICH DISTINGUISHES REMODEL SCOPE OF WORK FROM SEISMIC RETROFIT SCOPE OF WORK.

ZCS ENGINEERING ARCHITECTURE
127 NW D Street, Grants Pass, Oregon 97526 | 541-479-3865

REEDSPORT FIRE DISTRICT
124 N 4TH ST.
REEDSPORT, OR 97467

REEDSPORT FIRE STATION 7

KCL ENGINEERING
199 E 5th Ave, Suite 35
Eugene, OR
97401
503-212-4612

REGISTERED PROFESSIONAL ENGINEER 97568 OREGON SEP. 14, 2021 SHYLA KEAYS-GOODMAN
EXPIRES: 6/30/2023

△	DATE:	Description

PROJECT NO.	G-1468-21
DRAWN:	JDH
CHECKED:	SKG
DATE:	01-26-23

FIRST FLOOR PLAN - LIGHTING

E2.1

100% CONSTRUCTION DOCUMENTS | BID / PERMIT SET

ONE INCH EQUALS FULL SCALE

4/26/2023 1:03:00 AM

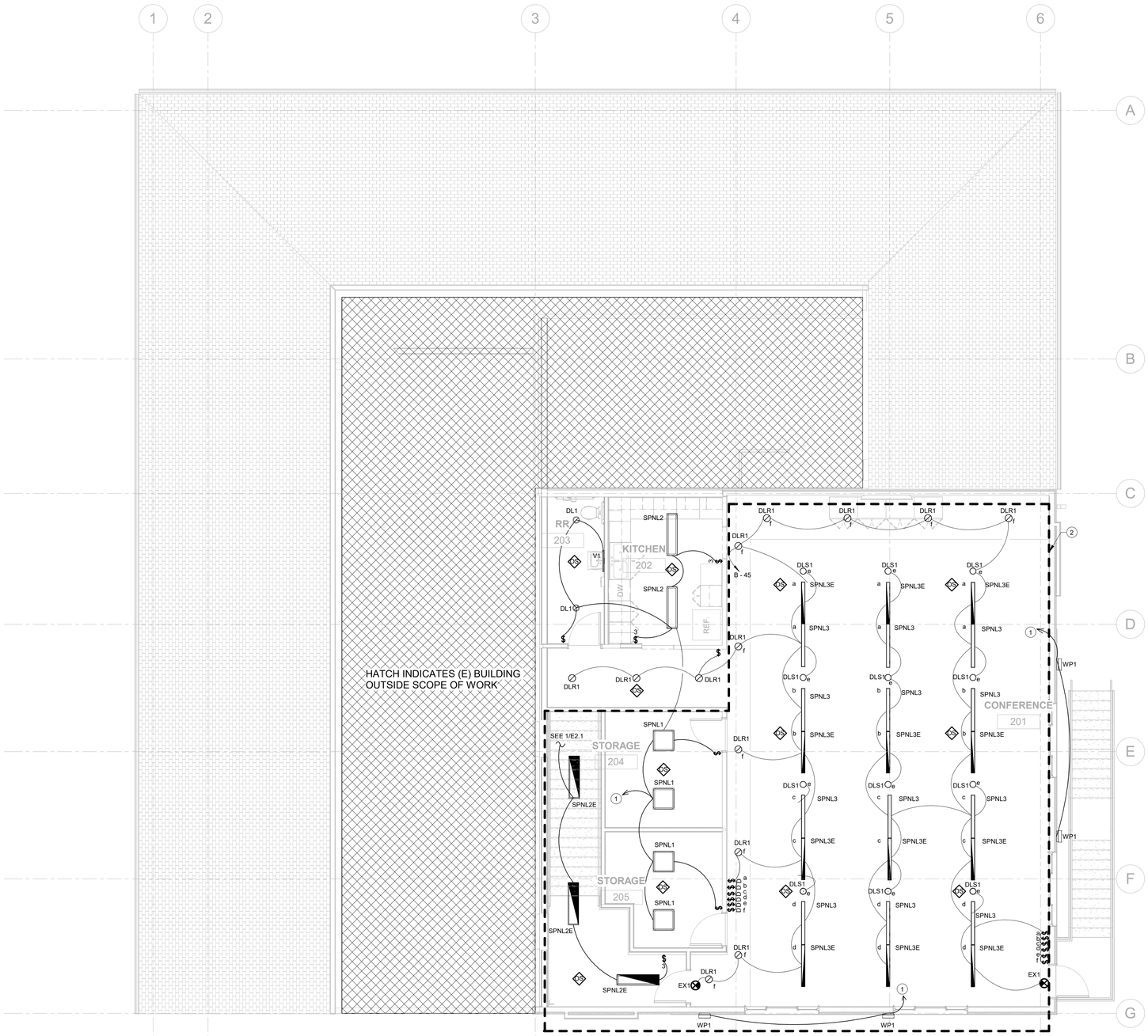

1 / E2.2 ELECTRICAL LIGHTING - SECOND FLOOR PLAN

3/16" = 1'-0"

LIGHTING GENERAL NOTES

A. COORDINATE LOCATION/INSTALLATION OF MECHANICAL AND ELECTRICAL WORK WITH ALL OTHER TRADES. NO ASPECT OF A SYSTEM INSTALLATION OR ITS ROUGH-IN SHALL COMMENCE UNTIL PROPER AND TIMELY COORDINATION WITH ALL TRADES ASSOCIATED WITH THE INSTALLATION HAS TRANSPIRED. ITEMS TO BE COORDINATED SHALL INCLUDE BUT NOT BE LIMITED TO: BUILDING STRUCTURE, SHEET METAL, ALL PIPING SYSTEMS, LIGHT FIXTURES, CONDUITS, CABLE TRAYS, ETC. REFER TO ALL GENERAL, MECHANICAL, AND ELECTRICAL DRAWINGS AND SPECIFICATIONS FOR THIS PROJECT.

KEYNOTES (#)

1 INTERCEPT AND EXTEND EXISTING BRANCH CIRCUIT AND CONNECT TO NEW LIGHTING AND CONTROLS.

2 ITEM(S) PART OF REMODEL SCOPE OF WORK AND NOT RELATED TO THE SEISMIC RETROFIT. ALL BIDS SHALL CONTAIN SEPARATE LINE ITEM PRICING WHICH DISTINGUISHES REMODEL SCOPE OF WORK FROM SEISMIC RETROFIT SCOPE OF WORK.

ZCS ENGINEERING ARCHITECTURE
127 NW D Street, Grants Pass, Oregon 97526 | 541-479-3865

REEDSPORT FIRE DISTRICT
124 N 4TH ST.
REEDSPORT, OR 97467

REEDSPORT FIRE STATION 7

KCL ENGINEERING
199 E 5th Ave, Suite 35
Eugene, OR
97401
503-212-4612

REGISTERED PROFESSIONAL ENGINEER 97568 OREGON SEP. 14, 2021 SHYLA KEAYS-GOODMAN
EXPIRES: 6/30/2023

△	DATE:	Description

PROJECT NO.	G-1468-21
DRAWN:	JDH
CHECKED:	SKG
DATE:	01-26-23

SECOND FLOOR PLAN - LIGHTING

E2.2

100% CONSTRUCTION DOCUMENTS | BID / PERMIT SET

ONE INCH EQUALS FULL SCALE

4/26/2023 1:03:00 AM

RISER DIAGRAM GENERAL NOTES

A. DIAGRAM INDICATES PARTIAL LAYOUT OF ELECTRICAL DISTRIBUTION SYSTEM. REFER TO FLOOR PLANS FOR EQUIPMENT LOCATIONS.
B. USE COPPER CONDUCTORS UNLESS OTHERWISE INDICATED.
C. MATCH NEUTRAL CONDUCTOR SIZE TO THE PHASE CONDUCTORS UNLESS OTHERWISE NOTED.
D. ALL WIRING SHALL BE IN RACEWAY AS NOTED. REFER TO SPECIFICATIONS FOR CONDUIT APPLICATION REQUIREMENTS.

RISER DIAGRAM KEYED NOTES:

1. REMOVE AND REPLACE PANEL B IN NEW LOCATION SHOWN ON FLOOR PLANS. PROVIDE WIREWAY GUTTER IN EXISTING PANEL LOCATION TO INTERCEPT AND EXTEND EXISTING TO REMAIN BRANCH CIRCUITS TO NEW PANEL. REFER TO PANEL SCHEDULE FOR ADDITIONAL INFORMATION.
2. PROVIDE NEW GENERATOR FEEDER.

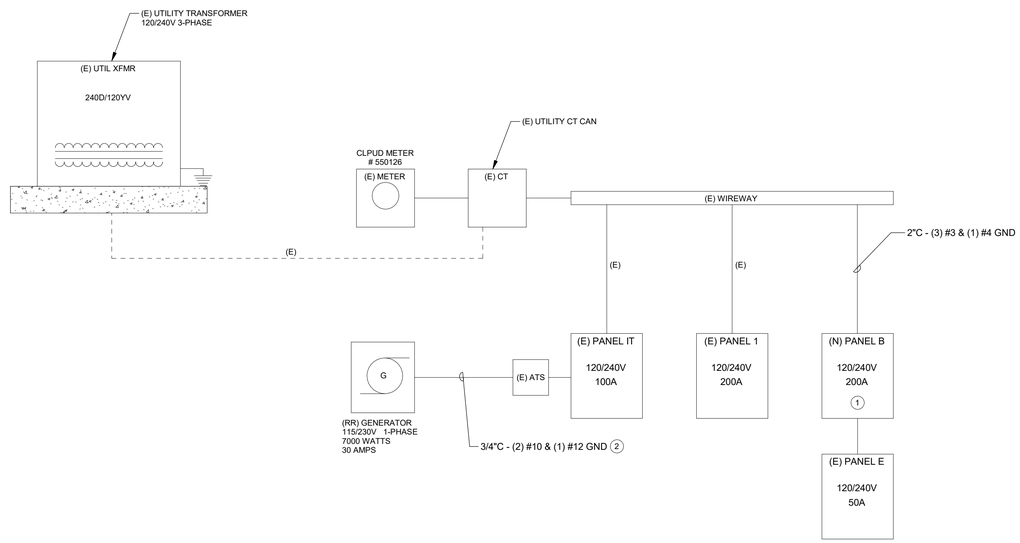

1 / E3.1 PARTIAL ONE-LINE DIAGRAM
NTS

ZCS ENGINEERING ARCHITECTURE
127 NW D Street, Grants Pass, Oregon 97526 | 541-479-3865

REEDSPORT FIRE DISTRICT
124 N 4TH ST.
REEDSPORT, OR 97467

REEDSPORT FIRE STATION 7

KCL ENGINEERING
199 E 5th Ave, Suite 35
Eugene, OR
97401
503-212-4612

REGISTERED PROFESSIONAL ENGINEER 97568 OREGON SEP 14, 2021 SHYLA KEAYS-GOODMAN
EXPIRES: 6/30/2023

△	DATE:	Description

PROJECT NO.	G-1468-21
DRAWN:	JDH
CHECKED:	SKG
DATE:	01-26-23

ELECTRICAL ONE-LINE DIAGRAM

E3.1

100% CONSTRUCTION DOCUMENTS | BID / PERMIT SET

ONE INCH EQUALS FULL SCALE 4/26/2023 1:03:00 AM

LUMINAIRE SCHEDULE

NOTES:

A. ALL FIXTURES SHALL BE U.L. OR SIMILARLY LISTED.

B. REFER TO ARCHITECTURAL DOCUMENTS FOR EXACT MOUNTING LOCATIONS, DETAILS, AND CONFIGURATIONS OF ALL LUMINAIRES. IF ARCHITECTURAL DRAWINGS DO NOT CLARIFY EXACT MOUNTING LOCATION OR DETAIL, ISSUE AN RFI FOR ARCHITECT TO SPECIFICALLY CLARIFY PRIOR TO FIXTURE ROUGH-IN.

C. VERIFY COMPATIBILITY OF LIGHT FIXTURES WITH CEILING MATERIAL, ADJACENT CONSTRUCTION, AND ADJACENT FINISHES PRIOR TO SHOP DRAWINGS SUBMITTAL NOTIFY THE ARCHITECT OF ANY CONFLICTS WITH THE PROPOSED INSTALLATION.

D. CONTRACTOR IS RESPONSIBLE FOR ALL MISCELLANEOUS HARDWARE NECESSARY TO INSTALL AND SUPPORT THE LUMINAIRES.

E. AIM AND TARGET ADJUSTABLE INTERIOR AND EXTERIOR LIGHT FIXTURES UNDER THE OBSERVATION AND IN COMPLIANCE WITH RECOMMENDATIONS OF THE ARCHITECT. INCLUDE LABOR AND MATERIAL COSTS MADE NECESSARY BY THIS REQUIREMENT.

F. CONTRACTOR IS RESPONSIBLE FOR OBTAINING AND FILLING OUT ALL UTILITY REBATE FORMS FOR OWNER.

DESIGNED BY: INITIALS

TYPE	MANUFACTURER	MODEL	DESCRIPTION	VOLTAGE	LOAD-VA	LAMP TYPE	APPROVED EQUALS
AOS1	LITHONIA LIGHTING	VW150IM12 - E27 BASE	UTILITY VAPOR TIGHT - WALL MOUNT - RED STROBE TUBE LAMP BASE E27	120 V	12 VA	RED STROBE BASE E27	AS APPROVED BY ENGINEER
DL1	GOTHAM	EVO 40/10 WR WD LSS MVOLT	RECESSED 6" DOWNLIGHT LED	120 V	10 VA	LED,4000K,80CRI,1000LM	AS APPROVED BY ENGINEER
DL2	GOTHAM	EVO4RSH 40/10 DFF SOL MVOLT	RECESSED 4" DOWNLIGHT LED	120 V	9 VA	LED,4000K,80CRI,1000LM	AS APPROVED BY ENGINEER
DL3	GOTHAM	EVO6VR 50/15 WR LSS WD PCC	RECESSED 6" DOWNLIGHT LED VANDAL RESISTANT	120 V	15 VA	LED,4000K,80CRI,1000LM	AS APPROVED BY ENGINEER
DLR1	INDY	LLPRM4 13LM 40K MVOLT G4 80CRI ZT HW WH	4" RECESSED DOWNLIGHT - ROUND CAN	120 V	12 VA	LED,4000L, 80CRI, 1300 LM	AS APPROVED BY ENGINEER
DLS1	JUNO	JSF 7IN 10LM 40K 90CRI MVOLT ZT WH	SURFACE 7" DIAMETER LED - LOW PROFILE -0-10V DIMMING DRIVER	120 V	13 VA	LED,4000K, 80CRI, 1000 LM	AS APPROVED BY ENGINEER
EX1	LITHONIA LIGHTING	LE P W 1 G EL N	EXIT SIGN, UNIVERSAL MOUNTING.	120 V	5 VA	GREEN LED	AS APPROVED BY ENGINEER
SL1	LITHONIA LIGHTING	CLX L24 1500LM SEF WD MVOLT 50K 80CRI	SURFACE LINEAR LED	120 V	11 VA	LED,5000K,80CRI,1619LM	AS APPROVED BY ENGINEER
SPNL1	LITHONIA LIGHTING	CPANL 2X2 AL01 SWW7 M4	GENERAL PURPOSE LED TROFFER 2'X2' WITH 3300 NOMINAL LUMENS #A12 ACRYLIC LENS AND 5000K LEDS -DCMK 14	120 V	31 VA	LED,5000K,80CRI,3300LM	AS APPROVED BY ENGINEER
SPNL2	LITHONIA LIGHTING	CPANL 1X4 AL01 SWW7 M1	GENERAL PURPOSE LED TROFFER 1'X4' WITH 3700 NOMINAL LUMENS #A12 ACRYLIC LENS AND 5000K LEDS -DCMK 14	120 V	31 VA	LED,5000K,80CRI,3300LM	AS APPROVED BY ENGINEER
SPNL2E	LITHONIA LIGHTING	CPANL 1X4 AL01 SWW7 M1 -10W ILBLP CP10 HE SD A	GENERAL PURPOSE LED TROFFER 1'X4' WITH 3700 NOMINAL LUMENS #A12 ACRYLIC LENS AND 5000K LEDS -DCMK 14 - EMERGENCY BATTERY	120 V	31 VA	LED,5000K,80CRI,3300LM	AS APPROVED BY ENGINEER
SPNL3	AXIS LIGHTING	BEAM4	4 FT SURFACE MOUNTED LED LIGHTING FIXTURE WITH FROSTED LENS - TB4SLED BEAM 4 SURFACE LED 4000 LM 80 CRI 4000K - SO-0-10V DIMMING	120 V	38 VA	LED,4000K,80CRI,1000LM	AS APPROVED BY ENGINEER
SPNL3E	AXIS LIGHTING	BEAM4	4 FT SURFACE MOUNTED LED LIGHTING FIXTURE WITH FROSTED LENS - TB4SLED BEAM 4 SURFACE LED 4000 LM 80 CRI 4000K - SO-0-10V DIMMING-EMERGENCY BATTERY 90 MIN.	120 V	38 VA	LED,4000K,80CRI,1000LM	AS APPROVED BY ENGINEER
SVT1	LITHONIA LIGHTING	FEM L48 6000LM LPAFL WD MVOLT	FEM L48 6000LM IMACD WD XX 50K 80CRI	120 V	38 VA	LED,5000K,80CRI,6000LM	AS APPROVED BY ENGINEER
SVT1E	LITHONIA LIGHTING	FEM L48 6000LM LPAFL WD MVOLT - E10WMCP	FEM L48 6000LM IMACD WD XX 50K 80CRI - EMERGENCY BATTERY	120 V	38 VA	LED,5000K,80CRI,6000LM	AS APPROVED BY ENGINEER
V1	LITHONIA LIGHTING	FMVCSLS 24IN MVOLT KR	SURFACE WALL CONTEMPORARY SQUARE VANITY LED	120 V	27 VA	LED,4000K,90CRI,1740LM	AS APPROVED BY ENGINEER
WP1	LIGMAN	UGA-31913-54W-T1&T4-W50-01-120/277	GANDALF 22 SURFACE-IP65-HYBRID TYPE I & TYPE IV-HOUSING BLACK COLOR	120 V	54 VA	LED,5000K,80CRI,6736LM	AS APPROVED BY ENGINEER

BRANCH PANEL: B

LOCATION:
SUPPLY FROM:
MOUNTING: SURFACE
ENCLOSURE: TYPE 1

VOLTAGE: 120/240 SINGLE
PHASES: 1
WIRES: 3

SCCR RATING:
MAINS TYPE: MCB
MAINS RATING: 400 A
MCB RATING: 200 A

NOTES: BOLD - NEW BRAKER AND CIRCUITRY
(E) - EXISTING CIRCUITRY

CIRCUIT DESCRIPTION	P	AMP	CKT NO	A		B		CKT NO	AMP	P	CIRCUIT DESCRIPTION
(E) LIGHTING RM 116,117 & CONFERENCE ROOM	1	20 A	1	300	300			2	20 A	1	(E) LIGHTING RM 104,107, & 110
(E) LIGHTING RM 111,108,105, 112 - 115, PINK...	1	20 A	3			300	300	4	20 A	1	(E) LIGHTING RM 102
(E) RECEPTACLE RM 115	1	20 A	5	180	180			6	20 A	1	(E) RECEPTACLE RM 102
(E) RECEPTACLE RM 115	1	20 A	7			180	180	8	20 A	1	(E) RECEPTACLE RM 107, 101
(E) RECEPTACLE RM 115	1	20 A	9	180	180			10	20 A	1	(E) RECEPTACLE RM 112,113,114
(E) FIRE ALARM, STORAGE RM 109	1	20 A	11			180	180	12	20 A	1	(E) RECEPTACLE RM 108,111
(E) OUTSIDE LIGHTING	1	20 A	13	300	180			14	20 A	1	(E) RECEPTACLE RM 105,108
(E) RECEPTACLE RM 117	1	20 A	15			180	1080	16	20 A	1	**R. ROLLUP DOOR MOTOR - APP BAY 101**
(E) RECEPTACLE RM 117	1	20 A	17	180	1080			18	20 A	1	**R. COORD REEL - APP BAY 101**
R. NORTH & EAST WALL - APP BAY 101	1	20 A	19			720	720	20	20 A	1	**R. WEST WALL - APP BAY 101 & GEN RM 101A**
R. EVIDENCE 102 & CORRIDOR 122	1	20 A	21	900	360			22	20 A	1	**R. PRINTER**
R. REFRIGERATOR - BREAK 105	1	20 A	23			180	180	24	20 A	1	**R. DISHWASHER - BREAK 105**
R. ARMORY 107 & BREAK 105	1	20 A	25	1080	900			26	20 A	1	**R. WEST WALL DISPATCH 108 & BATHROOM**
R. RR 103 & SERVER 104	1	20 A	27			540	540	28	20 A	1	**R. EAST WALL DISPATCH 108**
R. SERVER 104 - EQUIPMENT	1	20 A	29	180	540			30	20 A	1	**R. EAST WALL - BREAK 105**
R. SERVER 104 - EQUIPMENT	1	20 A	31			180	540	32	20 A	1	**R. KITCHEN 202 WEST WALL & RR 203**
R. REGRIGERATOR - KITCHEN 202	1	20 A	33	180	540			34	20 A	1	**R. KITCHEN 202 NORTH & EAST WALL -...**
R. DISHWASHER - KITCHEN 202	1	20 A	35			180	720	36	20 A	1	**R. NORTH & EAST WALL - CONFERENCE 201**
R. STORAGE 204	1	20 A	37	720	720			38	20 A	1	**R. EAST & SOUTH WALL - CONFERENCE 201**
R. STORAGE 205	1	20 A	39			720	180	40	20 A	1	**EF-6 & EF-3 (SECOND FLOOR)**
EF-4 & EF-5	1	20 A	41	170	40			42	20 A	1	**EF-1 (RR 103) & EF-2 (RR DISPATCH 108)**
CUH-1 (APP BAY 101 - SOUTH SIDE)	1	20 A	43			1500	1500	44	20 A	1	**CUH-2 (APPBAY 101 - NORTH WALL)**
L. CONFERENCE ROOM 201	1	20 A	45	1008	180			46	20 A	1	**R. ROOF - MECH EQUIPMENT OU-1, RTU-1**
R. DISH WASHER	1	20 A	47			180	1600	48	20 A	2	**OU-1 (ROOF)**
R. FLOOR CONFERENCE 201	1	20 A	49	360	1600			50	-- --	--	--
(E) PANEL "E"	2	50 A	51			4800	10650	52	90 A	2	**RTU - 1 (ROOF)**
--	--	-- --	53	4800	10650			54	-- --	--	--
				27988 VA		28210 VA					
				233 A		235 A					

LEGEND:
"G" INDICATES GFCI TYPE BREAKER

LOAD CLASSIFICATION	CONNECTED LOAD	DEMAND FACTOR	ESTIMATED...	PANEL TOTALS	
HVAC	27890 VA	100.00%	27890 VA		
Lighting	2382 VA	100.00%	2382 VA	**TOTAL CONN. LOAD:**	56198 VA
POWER	9600 VA	100.00%	9600 VA	**TOTAL EST. DEMAND:**	53130 VA
RECEPTACLE	16200 VA	80.86%	13100 VA	**TOTAL CONN.:**	234 A
LTG	126 VA	125.00%	158 VA	**TOTAL EST. DEMAND:**	221 A

NOTES:

LIGHTING CONTROL SCHEDULE

NOTES:

A. ALL DEVICES SHALL BE U.L. OR SIMILARLY LISTED.

B. ALL DEVICES PROVIDED WITH MANUFACTURER LIMITED 5 YEAR WARRANTY.

C. PROVIDE LIGHTING CONTROLS WITH MANUFACTURER COMPLIANT POWER PACKS AND LOW VOLTAGE ROOM CONTROLLERS IN QUANTITY REQUIRED TO INSTALL A COMPLETE AND OPERATIONAL SYSTEM. MANUFACTURER OR MANUFACTURERS REP TO PROVIDE DEVICE QUANTITES, LAYOUTS AND TYPICAL WIRING DETAILS DURING SHOP SUBMITTAL PROCESS. PROVIDE DIMMING COMPATIBLE DEVICES WHERE DIMMING CONTROLS ARE SHOWN. COORDINATE DIMMING TYPE WITH LIGHTING FIXTURES SHOWN. REFER TO LUMINAIRE SCHEDUL...

D. INSTALL LOW VOLTAGE POWER PACKS AND ROOM CONTROLLERS ABOVE NEARBY ACCESSIBLE CEILING TILES OR IN MECHANICAL/STORAGE SPACES ADJACENT TO CONTROLLED FIXTURES. DO NOT INSTALL POWERPACKS EXPOSED IN COMMON SPACES OR IN...

E. PROVIDE FACTORY AUTHORIZED REPRESENTATIVE TO DEMONSTRATE TYPICAL INSTALLATION AND COMMISSIONING OF EQUIPMENT.

F. WHERE APPROVED EQUAL MANUFACTURER PRODUCTS SENSOR COVERAGE OR LOAD RATINGS DIFFER FROM BASIS OF DESIGN, CONTRACTOR AND MANUFACTURER ARE RESPONSIBLE FOR PROVIDING ADDITIONAL DEVICES AS NECCESARY TO PROVIDE A COMPLETE AND...

G. ETD'S AND ALL EMERGENCY LIGHTING CONTROLS COMPONENTS SHALL BE TESTED AND LISTED AS COMPATIBLE BY MANUFACTURER WITH NORMAL LIGHTING CONTROLS IN ALL AREAS.

H. UNLESS INDICATED OTHERWISE, LIGHTING CONTROL SCHEMES/OPERATION SHALL BE AS FOLLOWS:

CORRIDORS, VESTIBULES, COMMON SPACES:	SENSORS PROGRAMMED FOR OCCUPANCY MODE, AUTOMATIC ON/OFF OPERATION, 20 MINUTES MINNIMUM, 30 MINUTES MAXIMUM. DIMMING CONTROL OF FIXTURES WITHIN DAYLIGHT ZONES SHALL BE BY ALWAYS ON DAYLIGHT SENSOR.
ALL OTHER SPACES	SENSORS PROGRAMMED FOR VACANCY MODE, MANUAL ON/AUTOMATIC OFF OPERATION 20 MINUTES MINNIMUM, 30 MINUTES MAXIMUM.DIMMING CONTROL OF FIXTURES WITHIN DAYLIGHT ZONES SHALL BE BY ALWAYS ON DAYLIGHT SENSOR.

DESIGNED BY: INITIALS

TYPE	DESCRIPTION	ELECTRICAL	MOUNTING	SENSOR TYPE	COVERAGE	APPROVED MANUFACTURERS
OS	CEILING MOUNTED OCCUPANCY/VACANCY SENSOR. WHITE FINISH. AUTOMATIC SELF-ADAPTIVE COVERAGE THRESHOLD AND FALSE ON/FALSE OFF CORRECTION. 8-30 MINUTE TIMER SETTINGS. INDOOR USE.	LOW VOLTAGE	CEILING / 8'-12' MH	ULTRASONIC AND PIR DUAL TECHNOLOGY	1000 SQ FT / 360 DEG	HUBBELL, CRESTRON, ACUITY, WATTSTOPPER, GREENGATE, AS APPROVED BY ENGINEER.
OS z1A	WALL SWITCH OCCUPANCY SENSOR. DEVICE FINISH MATCHING WIRING DEVICES SPEC. RATED FOR MIN 1/6 HP MOTOR. INTEGRAL AUTOMATIC SELF-ADAPTIVE COVERAGE THRESHOLD AND FALSE ON/FALSE OFF CORRECTION. 8-30 MINUTE TIMER SETTINGS.	120V	WALL SWITCH / SINGLE GANG	PASSIVE INFRARED	1000 SQ FT / 180 DEG	HUBBELL, CRESTRON, ACUITY, WATTSTOPPER, GREENGATE, AS APPROVED BY ENGINEER.

EQUIPMENT CONNECTION SCHEDULE

ABBREVIATIONS:

1	NEMA 1 ENCLOSURE	INT	INTEGRAL WITH EQUIPMENT FROM FACTORY
3R	NEMA 3R ENCLOSURE	MMS	MANUAL MOTOR STARTER WITH FUSES
4	NEMA 4 ENCLOSURE	NFD	NON-FUSED DISCONNECT SWITCH, HEAVY DUTY
4X	NEMA 4X ENCLOSURE	RD	RETURN AIR DUCT DETECTOR
BO	PROVIDED BY OTHERS	RSR	RUN STATUS RELAY , NORMALLY OPEN
CB	CIRCUIT BREAKER IN PANEL	SD	SUPPLY AIR DUCT DETECTOR
CSD	COMBINATION STARTER/DISCONNECT	SSP	START/STOP PUSHBUTTON WITH PILOT
CP	CORD AND PLUG PROVIDED WITH UNIT	SS	START/STOP PUSHBUTTON
ECB	ENCLOSED CIRCUIT BREAKER	ST	SHUNT TRIP
FAR	FIRE ALARM SHUTDOWN RELAY	TOR	TIME DELAY OFF RELAY
FDS	FUSED DISCONNECT SWITCH, HEAVY DUTY	TS	TOGGLE SWITCH WITH PLUG FUSE
GF	GROUND FAULT CIRCUIT INTERRUPTION	VFD	VARIABLE FREQUENCY DRIVE
HOA	HAND-OFF-AUTO		

TAG	ELECTRICAL CHARACTERISTICS					DISCONNECT				CONTROLS		REMARKS
	VOLTAGE	PHASE	MOTOR HP	KW	MCA	TYPE	SIZE (AMPS)	NEMA RATING	FUSE SIZE (AMPS)	STARTER	DESCRIPTION	
	120 V	0										
CUH-1	120 V	1	----	1.5	12.5		20	1	20			
CUH-2	120 V	1	----	1.5	12.5		20	1	20			
EF-1	120 V	1	----	0.015			20	1	20			
EF-2	120 V	1	----	0.015			20	1	20			
EF-3	120 V	1	----	0.015			20	1	20			
EF-4	120 V	1	----	0.015			20	1	20			
EF-5	120 V	1	----	0.015			20	1	20			
EF-6	120 V	1	1/15	.5			20	1				
OU-1	240 V	1	----		13.4		20	3R				
RTU-1	240 V	1	----	----	88.9	3	90	3R	90			SINGLE POINT CONNECTION WITH MOP 90 AMPS

ZCS ENGINEERING ARCHITECTURE
127 NW D Street, Grants Pass, Oregon 97526 | 541-479-3865

REEDSPORT FIRE DISTRICT
124 N 4TH ST.
REEDSPORT, OR 97467

REEDSPORT FIRE STATION 7

KCL ENGINEERING
199 E 5th Ave, Suite 35
Eugene, OR
97401
503-212-4612

REGISTERED PROFESSIONAL ENGINEER 97568 OREGON SEP. 14, 2021 SHYLA KEAYS-GOODMAN
EXPIRES: 6/30/2023

△	DATE:	Description

PROJECT NO.	G-1468-21
DRAWN:	JDH
CHECKED:	SKG
DATE:	01-26-23

ELECTRICAL SCHEDULES

E4.1

100% CONSTRUCTION DOCUMENTS | BID / PERMIT SET

ONE INCH EQUALS FULL SCALE 4/26/2023 1:03:00 AM

KEYNOTES (#)

1 PROVIDE UNISTRUT TO MOUNT OUTDOOR GFI RECEPTACLE.

2 ITEM(S) PART OF REMODEL SCOPE OF WORK AND NOT RELATED TO THE SEISMIC RETROFIT. ALL BIDS SHALL CONTAIN SEPARATE LINE ITEM PRICING WHICH DISTINGUISHES REMODEL SCOPE OF WORK FROM SEISMIC RETROFIT SCOPE OF WORK.

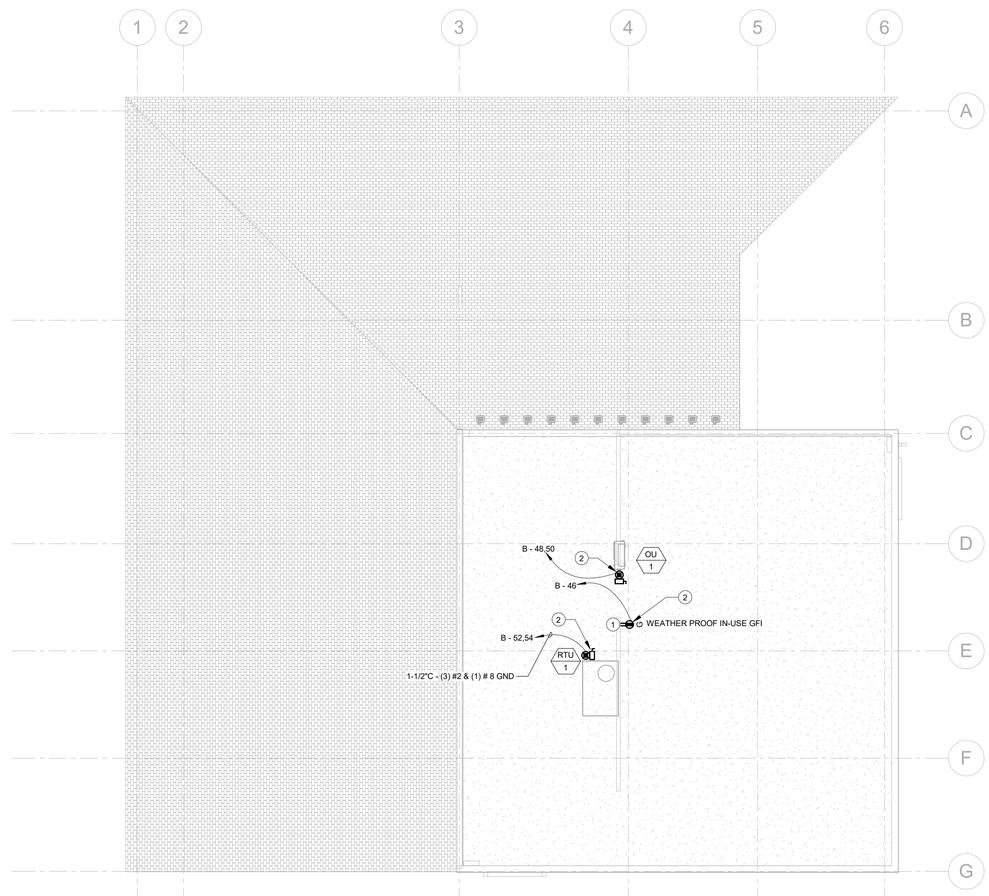

1 / E1.3 ROOF - ELECTRICAL

1/8" = 1'-0"

ZCS ENGINEERING ARCHITECTURE

127 NW D Street, Grants Pass, Oregon 97526 | 541-479-3865

REEDSPORT FIRE DISTRICT
124 N 4TH ST.
REEDSPORT, OR 97467

REEDSPORT FIRE STATION 7

KCL ENGINEERING

199 E 5th Ave, Suite 35
Eugene, OR
97401
503-212-4612

REGISTERED PROFESSIONAL ENGINEER
97568
OREGON
SEP. 14, 2021
SHYLA KEAYS-GOODMAN

EXPIRES: 6/30/2023

△	DATE:	Description

PROJECT NO.	G-1468-21
DRAWN:	JDH
CHECKED:	SKG
DATE:	01-26-23

ROOF - ELECTRICAL

E1.3

100% CONSTRUCTION DOCUMENTS | BID / PERMIT SET

ONE INCH EQUALS FULL SCALE

4/26/2023 1:02:59 AM

DISPATCH, FIRE AND POLICE CUTOVER PLAN

A. THE EXISTING BUILDING HOSTS THE FOLLOWING CRITICAL SERVICES THAT WILL BE REQUIRED TO REMAIN OPERATIONAL FOR THE DURATION OF CONSTRUCTION:
1. EMERGENCY DISPATCH OPERATIONS (SECONDARY PSAP)
2. CITY OF REEDSPORT JAIL
3. CITY OF REEDSPORT POLICE DEPARTMENT OFFICES

PRIOR TO THE COMMENCEMENT OF DEMOLITION AND SEISMIC IMPROVEMENTS, THE FOLLOWING ACTIVITIES MUST TAKE PLACE FOR TECHNOLOGY-RELATED SERVICES TO REMAIN OPERATIONAL:

NEW BUILDING-WIDE DATA/VOICE INFRASTRUCTURE

1. POLICE DEPARTMENT CONFERENCE ROOM SHALL HOST A NEW, PERMANENT, WALL-MOUNTED NETWORK CABINET THAT SHALL SERVE THE BUILDING WITH NEW DATA/VOICE SERVICES. ROOM SHALL ALSO HOST A TEMPORARY EQUIPMENT RACK FOR RADIO EQUIPMENT.
2. PREPARE CONFERENCE SPACE TO ACCOMMODATE THIS NEW EQUIPMENT. REFER TO SYSTEMS, ELECTRICAL AND ARCHITECTURAL SERIES SHEETS FOR ADDITIONAL INFORMATION.
3. ANCHOR NEW WALL NETWORK CABINET AND PROVIDE PATHWAY AND CABLE MANAGEMENT TO SUPPORT NEW INCOMING INFRASTRUCTURE.
4. ANCHOR NEW FLOOR STANDING 2-POST EQUIPMENT RACK.
5. PROVIDE ELECTRICAL CIRCUIT(S) AND RECEPTACLE(S) ADJACENT TO THE PLANNED CABINET AND RACK TO SUPPORT ALL SCHEDULED EQUIPMENT.
6. PROVIDE NEW DATA CABLING FROM THIS NEW CONFERENCE ROOM SPACE TO ALL EXISTING LOCATIONS WITHIN THE JAIL, POLICE DEPARTMENT AND SURROUNDING OFFICES. ROUTE INFRASTRUCTURE IN A MANNER THAT IS CONCEALED AND ALLOWS ALL EXISTING CABLING TO REMAIN ACTIVE AND UNDISTURBED. TERMINATE AND TEST ALL NEW CABLING.
7. CONTACT AND SCHEDULE DOUGLAS FAST NET (DFN) FOR A NEW REDUNDANT SERVICE FOR VOICE AND TELELPHONE. ENSURE SERVICE IS INSTALLED INSIDE THE POLICE DEPARTMENT CONFERENCE ROOM AND THE CABLING PATHWAY IS OUTSIDE OF THE ZONE OF CONSTRUCTION TO ACCOMMODATE THE SCHEDULED SEISMIC IMPROVEMENTS.
8. PROVIDE AND INSTALL REQUIRED SECURITY APPLIANCES AND NETWORK SWITCH(ES). IN COORDINATION WITH THE PROVIDERS AND VENDORS LISTED ON THIS SHEET, CONNECT AND CONFIGURE EQUIPMENT FOR BOTH EXTERNAL (INTERNET) AND INTERNAL NETWORK RESOURCES. COORDINATE AND ASSIST OWNER IN THIS TIME SENSITIVE TRANSITION FROM OLD INFRASTRUCTURE TO NEW.

TEMPORARY DISPATCH TRAILER PREPARATION

1. LOCATE THE GENERAL CONTRACTOR-PROVIDED TEMPORARY DISPATCH TRAILER.
2. INSTALL APPROPRIATE ELECTRICAL AND SYSTEMS PATHWAYS AND INFRASTRUCTURE NECESSARY TO SERVE THE DISPATCH OPERATOR(S) INSIDE THE TRAILER WITH POWER, DATA, VOICE, RADIO AND VIDEO SERVICES.

RADIO EQUIPMENT PREPARATIONS

1. FURNISH AND INSTALL SIX (6) RADIO-GRADE SERIES CABLES ROUTED FROM THE POLICE CONFERENCE ROOM TO THE ROOF TOP MOUNTED RADIO ANTENNAS. TERMINATE CABLES NEAR THE RADIO EQUIPMENT RACK.
2. ASSIST THE CITY OF REEDSPORT IN CONTACTING AND COORDINATING WITH DAY WIRELESS TO TERMINATE AND TEST THE NEW INFRASTRUCTURE.

DISPATCH RELOCATION (AND ALL ASSOCIATED EQUIPMENT)

1. PROVIDE A METHODICAL AND OFF-HOURS SCHEDULED PLAN TO REMOVE ALL RACK-MOUNT EQUIPMENT INSIDE THE EXISTING SERVER ROOM AND THE DISPATCH OFFICE AND PLACE IT INSIDE THE POLICE CONFERENCE ROOM'S NEW EQUIPMENT RACKS.
2. DURING THIS SAME SCHEDULED OUTAGE, REMOVE ALL DISPATCH WORKSTATION EQUIPMENT INCLUDING BUT NOT LIMITED TO: MONITORS, MONITOR MOUNTS, COMPUTER(S), KEYBOARDS, MICE, HEADSET AND OTHER INTERFACE DEVICES AND RE-INSTALL INSIDE THE DISPATCH TRAILER'S TEMPORARY FURNITURE. MAKE ALL NECESSARY FINAL CONNECTIONS USING THE TEMPORARY DATA INFRASTRUCTURE ROUTED FROM THE POLICE CONFERENCE ROOM TO THE TRAILER.

SERVICE PROVIDERS, VENDORS AND COORDINATION REQUIREMENTS

THIS CONTRACTOR SHALL BE RESPONSIBLE FOR COORDINATING PATHWAY, ROUGH-IN AND CABLING REQUIREMENTS WITH THE FOLLOWING VENDORS IN ORDER TO MITIGATE OR MINIMIZE ANY POTENTIAL FOR DOWNTIME:

INTERNET AND DISPATCH TELEPHONE SERVICES
1. COMPANY: DOUGLAS FASTNET
2. NAME: JASON MILLER
3. TELEPHONE: 541-968-6559
4. EMAIL: JASON.MILLER@DFN.NET

FIRE, POLICE AND DISPATCH RADIO SERVICES
1. COMPANY: DAY WIRELESS
2. NAME: APRIL FLORES, CALVIN EMIGH AND ANTHONY REYES
3. TELEPHONE: (OFFICE) 541-772-5602, (ANTHONY) 707-330-0420
4. EMAIL: AFLORES, CEMIGH, OR AREYES@DAYWIRELESS.COM

DISPATCH RECORDING AND LOGGING SERVER (EVENTIDE)
1. COMPANY: COMMUNICATIONS NORTHWEST
2. NAME: KEVIN FARLEY
3. TELEPHONE: 503-505-0021

DISPATCH TELEPHONE SYSTEM INTERFACE AND CONSOLE (EQUIPMENT PROVIDER)
1. COMPANY: PHASE 4 DESIGN
2. NAME: DAVE GRANT
3. TELEPHONE: 425-402-7308 X1
4. EMAIL: DAVE@PHASE4.ORG

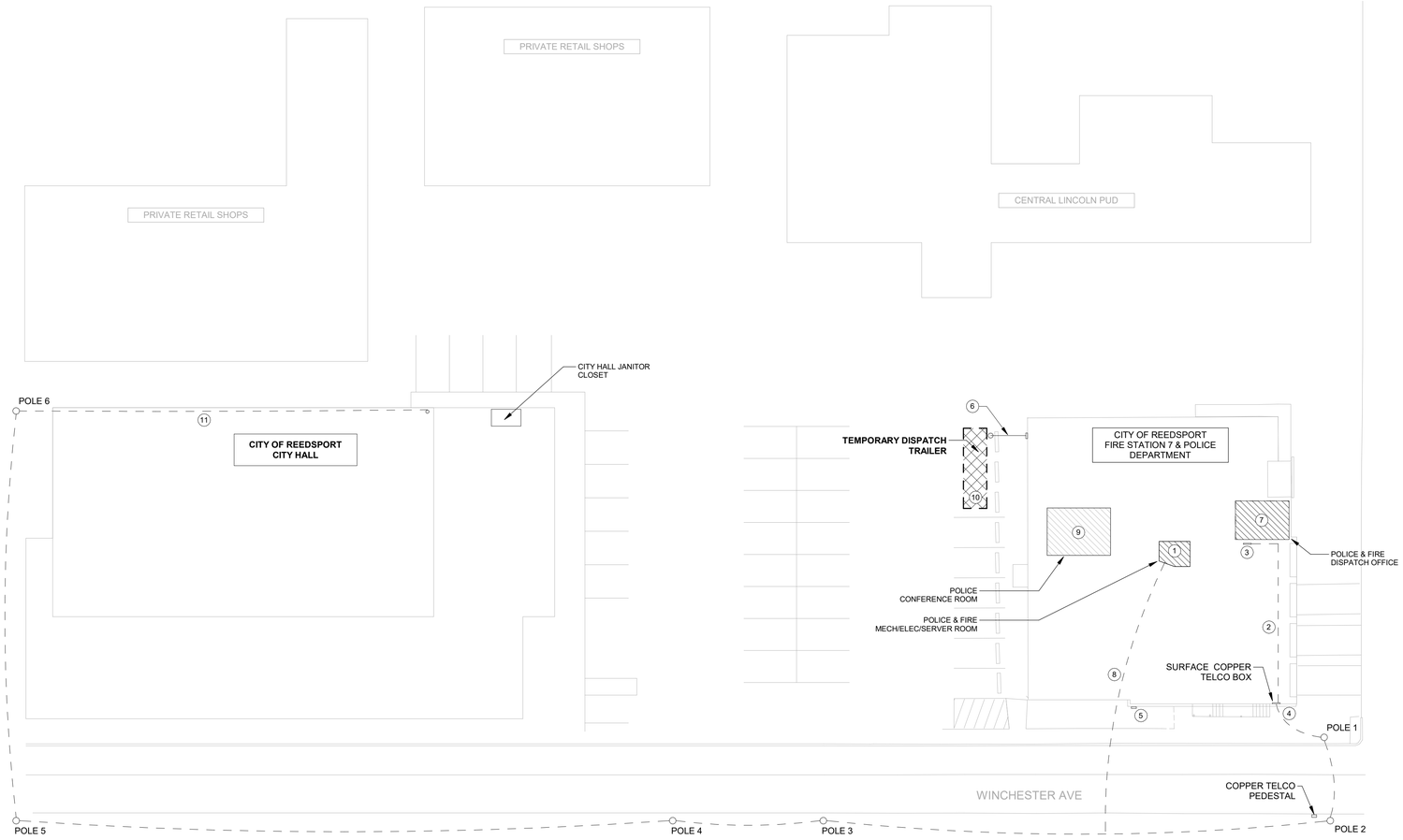

1 / T0.2 SYSTEMS SITE & CUTOVER PLAN OUTLINE
1" = 20'-0"

KEYNOTES (#)

1. EXISTING TELECOMMUNICATIONS ROOM SERVING POLICE, FIRE AND DISPATCH OPERATOR'S INTERNET, TELEPHONE AND RADIO SERVICES. ROOM ALSO ACTS AS A "HUB" OF CONNECTIVITY FOR THE NEIGHBORING CITY HALL BUILDING. RELOCATE THE EQUIPMENT TO THE POLICE DEPARTMENT'S CONFERENCE ROOM. PROVIDE AN ORGANIZED CUTOVER FOR THIS PROCESS.
2. EXISTING INACTIVE SERVICE PROVIDER-OWNED TELEPHONE COPPER CABLING. CABLING SHALL BE REMOVED IN ITS ENTIRETY. WORK WITH ZIPLY TO SCHEDULE THIS REMOVAL.
3. EXISTING INTERIOR TELECOMMUNICATIONS COPPER DEMARCATION PANEL. CABLING AND ENCLOSURE SHALL BE REMOVED IN ITS ENTIRETY. WORK WITH ZIPLY TO SCHEDULE THIS REMOVAL.
4. EXISTING TO REMAIN SURFACE CONDUIT AND WEATHERHEAD ENTRANCE LOCATED APPROXIMATELY 12'-0" ABOVE GRADE.
5. EXISTING SURFACE BOX AND ASSOCIATED SERVICE PROVIDER COAXIAL CABLING TO BE REMOVED IN ITS ENTIRETY. ASSIST THE OWNER IN CONTACTING ZIPLY OR SPECTRUM FOR A SCHEDULED DEMOLITION OF THIS INFRASTRUCTURE.
6. PROVIDE NEW "LIQUID-TIGHT" CONDUIT CONNECTION FROM THE BUILDING TO THE TRAILER. UTILIZE THIS PATHWAY FOR TELECOMMUNICATIONS CONNECTIVITY NEEDS AT THE TEMPORARY DISPATCH TRAILER. REFER TO THE DEMOLITION SERIES SHEETS FOR ADDITIONAL INFORMATION.
7. EXISTING DISPATCH OPERATOR ROOM SERVING EMERGENCY RESPONDER SERVICES. ROOM HOSTS A 2-POST EQUIPMENT RACK. EQUIPMENT SHALL BE RELOCATED TO THE POLICE DEPARTMENT'S CONFERENCE ROOM. PROVIDE AN ORGANIZED CUTOVER FOR THIS PROCESS.
8. EXISTING DOUGLAS FAST NET-OWNED FIBER OPTIC AERIAL CABLING. CABLE FLIES ACROSS THE STREET AND ATTACHES TO THE ROOF LINE OF THE EXISTING FIRE DEPARTMENT. CABLING APPEARS TO ROUTE OVER THE ROOF AND ENTERS THE BUILDING THROUGH A SHARED RADIO ANTENNA ENTRY POINT. COORDINATE WITH THE OWNER AND DOUGLAS FAST NET ON SCHEDULING REDUNDANT SERVICES TO BE PROVIDED AT THE POLICE CONFERENCE ROOM. BOTH SERVICES WILL BE ACTIVE TO ALLOW FOR A GRACEFUL MIGRATION/CUTOVER PROCESS. THE EXISTING SERVICE CAN NOT BE REMOVED UNTIL THE FINAL CUTOVER IS COMPLETED.
9. EXISTING POLICE DEPARTMENT CONFERENCE ROOM. NORTHEAST CORNER OF THIS ROOM SHALL ACT AS A PERMANENT TELECOMMUNICATIONS DISTRIBUTOR AND A TEMPORARY RADIO EQUIPMENT RACK LOCATION. THE TEMPORARY DISPATCH TRAILER, POLICE DEPARTMENT, JAIL AND CITY HALL BACKBONE FIBER SHALL BE SERVED BY THIS LOCATION. NEW DATA CABLING SHALL BE PULLED, TERMINATED, AND TESTED TO THE NEW RACKS.
10. PROPOSED TEMPORARY DISPATCH TRAILER. PROVIDE EIGHT (8) OUTDOOR-RATED CATEGORY 6 CABLES ROUTED FROM THE TRAILER INTO THE POLICE DEPARTMENT'S CONFERENCE ROOM SPACE. TERMINATE ALL EIGHT CABLES TO TWO (2) SURFACE-MOUNT 4-PORT JACKS INSIDE THE TRAILER. CABLING SHALL BE TERMINATED TO MODULAR JACKS AND INSTALLED IN MODULAR PATCH PANELS INSIDE THE POLICE CONFERENCE ROOM.
11. PRIVATE FIBER SERVING CITY HALL TELEPHONE/INTERNET SERVICES. FIBER OPTIC CABLE IS PART OF THE SAME DFN-OWNED AERIAL CABLE PLANT. COORDINATE THE TEMPORARY CONDITIONS REQUIRED TO RE-SERVE CITY HALL FROM A NEW HUB LOCATION WITHIN THE NEW TELECOMMUNICATIONS SPACE INSIDE THE POLICE DEPARTMENT'S CONFERENCE ROOM.

ZCS ENGINEERING ARCHITECTURE
127 NW D Street, Grants Pass, Oregon 97526 | 541-479-3865

REEDSPORT FIRE DISTRICT
124 N 4TH ST.
REEDSPORT, OR 97467

REEDSPORT FIRE STATION 7

KCL ENGINEERING
199 E 5th Ave, Suite 35
Eugene, OR
97401
503-212-4612

REGISTERED PROFESSIONAL ENGINEER 97568 OREGON SEP. 14, 2021 SHYLA KEAYS-GOODMAN
EXPIRES: 6/30/2023

△	DATE:	Description

PROJECT NO.	G-1468-21
DRAWN:	JDH
CHECKED:	SKG
DATE:	01-26-23

SITE PLAN - SYSTEMS

T0.2

100% CONSTRUCTION DOCUMENTS | BID / PERMIT SET

ONE INCH EQUALS FULL SCALE 4/26/2023 1:03:14 AM

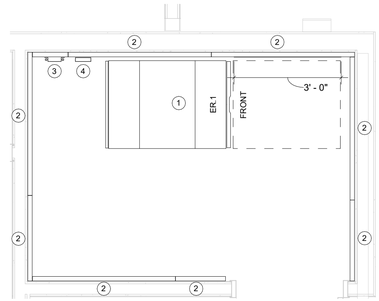

1 / T1.6 ENLARGED SERVER ROOM - FLOOR PLAN
1/2" = 1'-0"

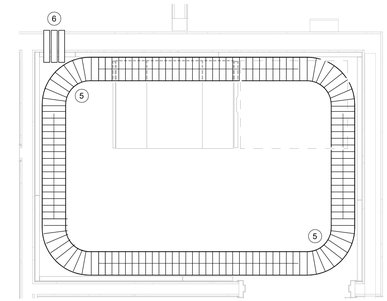

2 / T1.6 ENLARGED SERVER ROOM - CEILING PLAN
1/2" = 1'-0"

KEYNOTES (#)

1. PROVIDE ONE (1) NEW FULLY ENCLOSED SERVER CABINET. SEE RACK DIAGRAM AND SCHEDULE FOR EQUIPMENT LAYOUT AND RACK SPECIFICS.
2. PROVIDE SHEETS OF 4' X 8' 3/4" AC GRADE PLYWOOD BACKBOARD ON THE PERIMETER WALLS OF THE NEW SERVER ROOM. PAINT ON ALL SIDES WITH TWO COATS OF WHITE FIRE RETARDANT PAINT. BACKBOARD SHALL SERVE AS A WALL MOUNTING SPACE FOR SPECIAL SYSTEMS AND TELECOMMUNICATIONS DISTRIBUTION.
3. PROVIDE ONE (1) NEW TELECOMMUNICATIONS GROUNDING AND BONDING BUSBAR. THIS SHALL SERVE AS A SECONDARY BONDING BUSBAR (SBB) AND CONNECT TO THE PRIMARY BONDING BUSBAR INSIDE THE POLICE CONFERENCE ROOM UTILIZING A TELECOMMUNICATIONS BONDING BACKBONE CONDUCTOR. PROVIDE GROUNDING AND BONDING CONDUCTORS IN ACCORDANCE WITH SPECIFICATION SECTION 27 0526.
4. PROVIDE FOUR (4) RADIO GRADE CABLES ROUTED TO THE ROOF LEVEL TO FEED THE APPROPRIATE RADIO ANTENNA EQUIPMENT LOCATED AT THE ROOF LEVEL. COORDINATE SPECIFIC GRADE OF CABLE REQUIRED WITH OWNER'S PREFERRED VENDOR, DAY WIRELESS.

(!)
5. PROVIDE AN 8" X 4" PERIMETER BASKET-STYLE CABLE TRAY.
6. PROVIDE THREE (3) 2" CONDUIT PENETRATIONS FOR FUTURE CABLE PATHWAYS.

(!) **KEYNOTE INDICATES ITEM IS PART OF REMODEL SCOPE OF WORK AND NOT SEISMIC RETROFIT RELATED. ALL BIDS SHALL CONTAIN SEPARATE LINE-ITEM PRICING THAT DISTINGUISHES REMODEL RELATED SCOPE OF WORK FROM SEISMIC RELATED SCOPE OF WORK.**

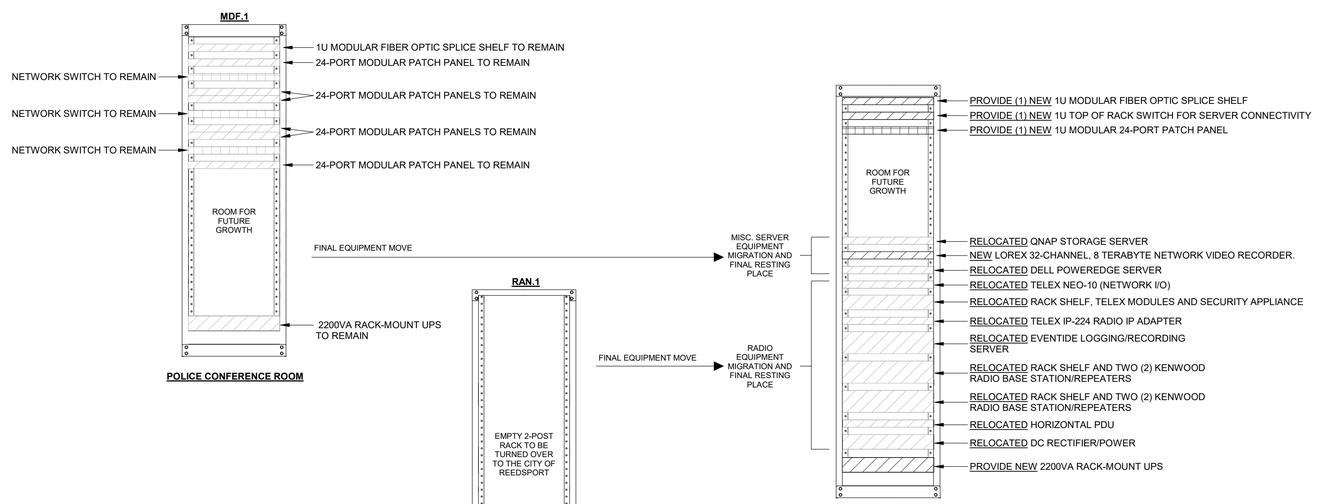

NEW RACK SCHEDULE

RACK ID:	ER.1
MANUFACTURER:	CHATSWORTH PRODUCTS, INC.
MODEL:	ZD32-A2220-E1
MOUNT:	FLOOR ANCHORED
RU CAPACITY:	52U
HEIGHT:	78.00"
WIDTH:	29.50"
DEPTH:	39.40"
WEIGHT CAPACITY:	5000 LBS.
COLOR:	GLACIER WHITE
VERTICAL MGMT:	N/A

4 RACK DIAGRAM - NEW SERVER ROOM CABINET
NONE

ZCS ENGINEERING ARCHITECTURE
127 NW D Street, Grants Pass, Oregon 97526 | 541-479-3865

REEDSPORT FIRE DISTRICT
124 N 4TH ST.
REEDSPORT, OR 97467

REEDSPORT FIRE STATION 7

KCL ENGINEERING
199 E 5th Ave, Suite 35
Eugene, OR
97401
503-212-4612

REGISTERED PROFESSIONAL ENGINEER 97568 OREGON SEP 14, 2021 SHYLA KEAYS-GOODMAN
EXPIRES: 6/30/2023

△	DATE:	Description

PROJECT NO.	G-1468-21
DRAWN:	JDH
CHECKED:	SKG
DATE:	01-26-23

ENLARGED PLAN - NEW SERVER ROOM

T1.6

100% CONSTRUCTION DOCUMENTS | BID / PERMIT SET

ONE INCH EQUALS FULL SCALE 4/26/2023 1:03:18 AM

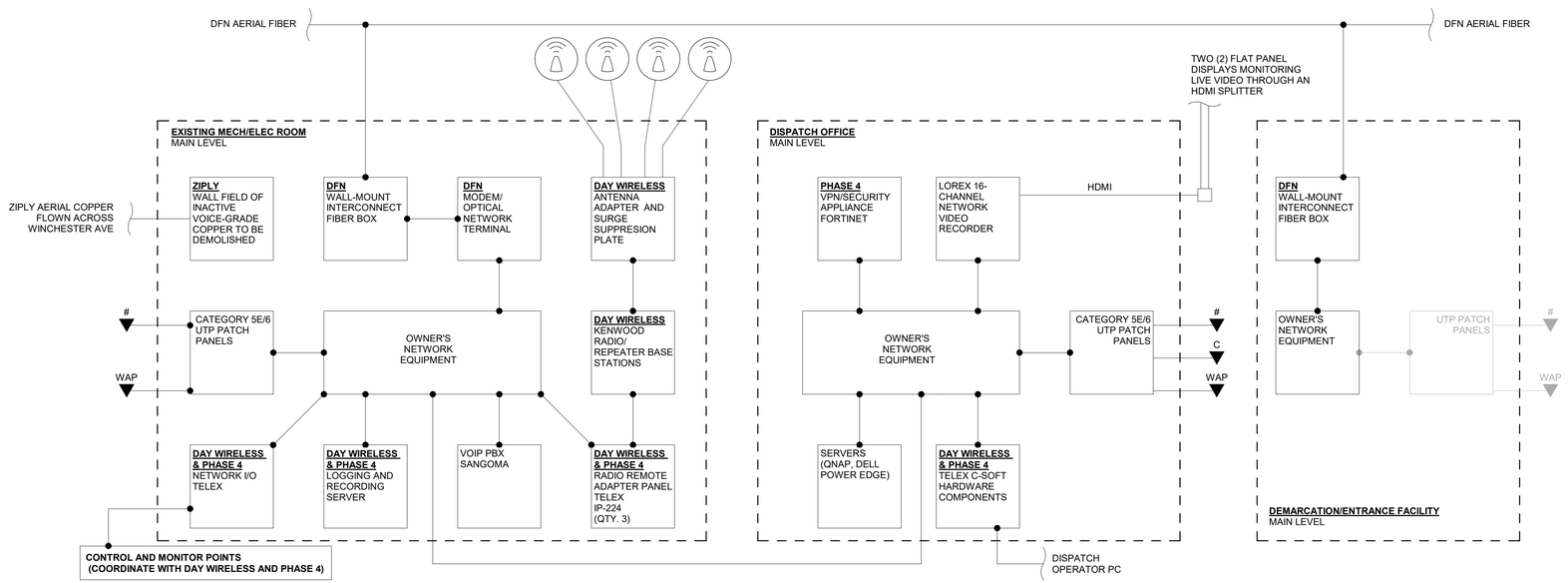

CITY OF REEDSPORT - FIRE STATION 7
EXISTING TELECOMMUNICATIONS AND DISPATCH OPERATIONS RISER DIAGRAM

CITY OF REEDSPORT - CITY HALL
EXISTING TELECOMMUNICATIONS RISER DIAGRAM

1 EXISTING SYSTEMS RISER DIAGRAM
NOT TO SCALE

EXISTING SYSTEMS RISER DIAGRAM NOTES:

A. ILLUSTRATION IS INTENDED TO COMMUNICATE MAJOR EXISTING SYSTEMS AND EXISTING HORIZONTAL CABLING. IT IS NOT EXHAUSTIVE.

B. COORDINATE THE PLANNED MIGRATION OF ALL SYSTEMS AND ASSOCIATED INFRASTRUCTURE WITH THE OWNER AND GENERAL CONTRACTOR. PROVIDE A DETAILED CUTOVER PLAN THAT MINIMIZES DISPATCH OPERATIONS DOWN TIME.

SYMBOL LEGEND

- # — EXISTING CATEGORY 5E/6, UNSHIELDED TWISTED-PAIR
- C — EXISTING CATEGORY 5E/6, UNSHIELDED TWISTED-PAIR SERVING CAMERA SYSTEM.
- WAP — EXISTING CATEGORY 5E/6, UNSHIELDED TWISTED-PAIR - SERVING WIRELESS ACCESS POINTS
- EXISTING ROOF-MOUNTED ANTENNAS AND ASSOCIATED RADIO-GRADE CABLING

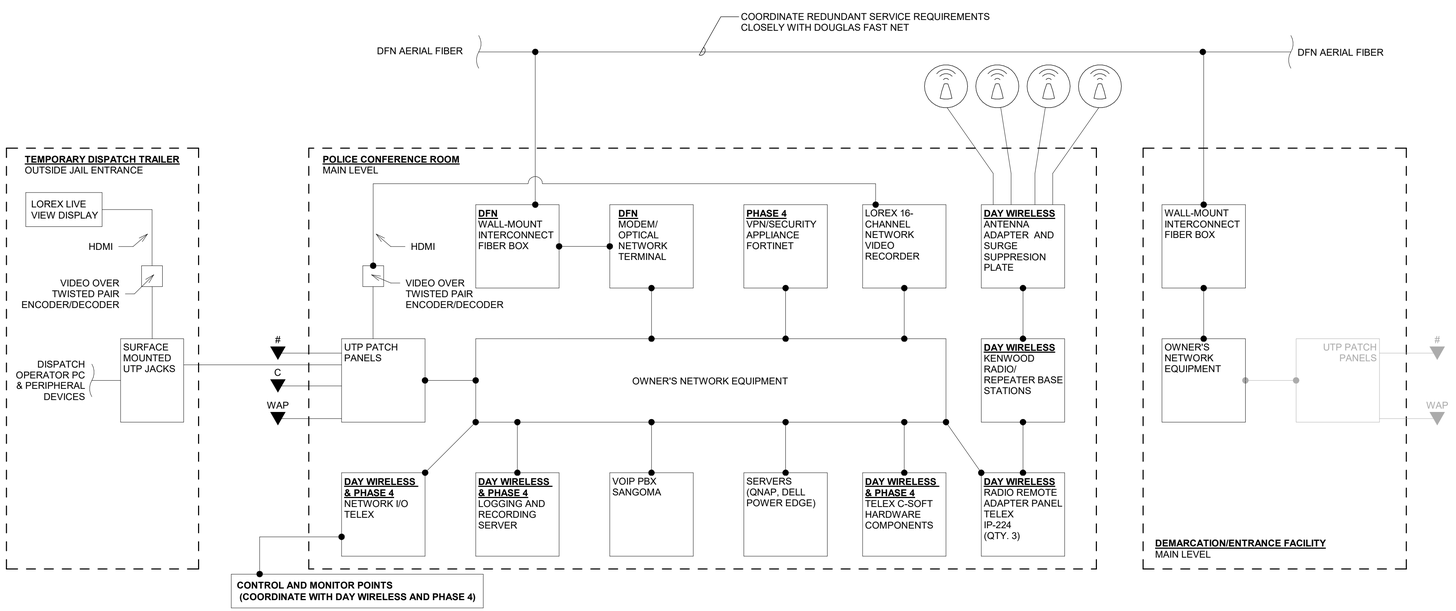

CITY OF REEDSPORT - TEMPORARY TRAILER
TELECOMMUNICATIONS RISER DIAGRAM

CITY OF REEDSPORT - FIRE STATION 7
NEW TELECOMMUNICATIONS AND DISPATCH OPERATIONS RISER DIAGRAM

CITY OF REEDSPORT - CITY HALL
EXISTING TELECOMMUNICATIONS RISER DIAGRAM

2 SEISMIC IMPROVEMENTS MIGRATION OF EXISTING SYSTEMS RISER DIAGRAM
NOT TO SCALE

COMMUNICATIONS RISER DIAGRAM NOTES:

A. RISER DIAGRAM REFLECTS EQUIPMENT, INFRASTRUCTURE AND LABOR ASSOCIATED WITH THE DEMOLITION SERIES DRAWINGS AND ASSOCIATED ENLARGED ROOM PLANS OF THE EXISTING SERVER ROOM, DISPATCH OFFICE AND POLICE CONFERENCE ROOM. REFER TO THOSE SHEETS FOR ADDITIONAL INFORMATION.

B. COORDINATE ALL PATHWAYS CLOSELY WITH THE ELECTRICAL CONTRACTOR. ENSURE EACH CONDUIT IS PROVIDED A PULL STRING AND/OR MULETAPE.

C. ANY HORIZONTAL CATEGORY COPPER INFRASTRUCTURE THAT IS SERVED WITH AN UNDERGROUND CONDUIT SHALL BE AN OUTDOOR-RATED CABLE. DO NOT INSTALL A TYPICAL PLENUM OR RISER GRADE CABLE WITHOUT THE OUTDOOR RATING.

SYMBOL LEGEND

- # — CATEGORY 6, UNSHIELDED TWISTED-PAIR - BLUE CABLE (PROVIDE NUMBER OF CABLES DEFINED BY '#' AT EACH LOCATION)
- C — CATEGORY 6, UNSHIELDED TWISTED-PAIR - BLUE CABLE (ONE CABLE) - SERVING OWNER PROVIDED CAMERA SYSTEM.
- WAP — CATEGORY 6, UNSHIELDED TWISTED-PAIR - BLUE CABLE (ONE CABLE) - SERVICE OWNER PROVIDED WIRELESS ACCESS POINT.
- EXISTING ROOF-MOUNTED ANTENNAS

ZCS ENGINEERING ARCHITECTURE
127 NW D Street, Grants Pass, Oregon 97526 | 541-479-3865

REEDSPORT FIRE DISTRICT
124 N 4TH ST.
REEDSPORT, OR 97467

REEDSPORT FIRE STATION 7

KCL ENGINEERING
199 E 5th Ave, Suite 35
Eugene, OR
97401
503-212-4612

REGISTERED PROFESSIONAL ENGINEER 97568 OREGON SEP 14, 2021 SHYLA KEAYS-GOODMAN
EXPIRES: 6/30/2023

△	DATE:	Description

PROJECT NO.	G-1468-21
DRAWN:	JDH
CHECKED:	SKG
DATE:	01-26-23

SYSTEMS RISER DIAGRAMS

T3.1

100% CONSTRUCTION DOCUMENTS | BID / PERMIT SET

ONE INCH EQUALS FULL SCALE 4/26/2023 1:03:19 AM

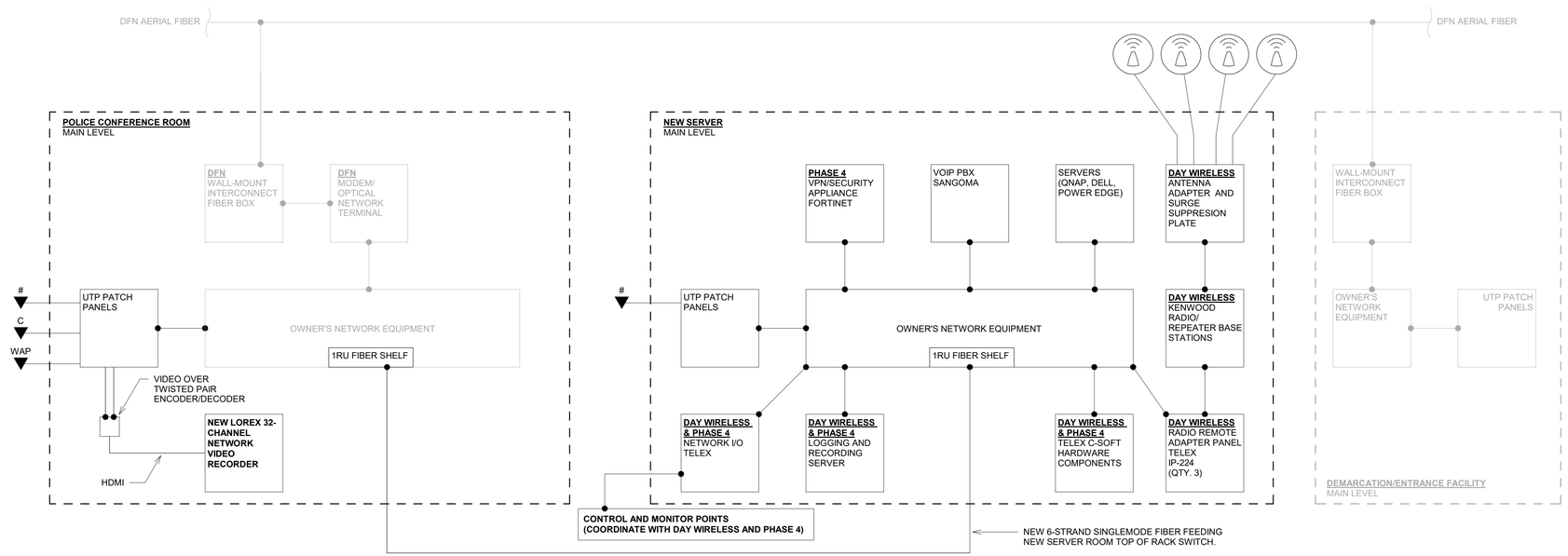

CITY OF REEDSPORT - FIRE STATION 7
TELECOMMUNICATIONS AND DISPATCH OPERATIONS RISER DIAGRAM

CITY OF REEDSPORT - CITY HALL
EXISTING TELECOMMUNICATIONS RISER DIAGRAM

1 DISPATCH MOVE-IN AND MIGRATION OF SERVER CABINET RISER DIAGRAM
NOT TO SCALE

COMMUNICATIONS RISER DIAGRAM NOTES:

A. RISER DIAGRAM REFLECTS EQUIPMENT, INFRASTRUCTURE AND LABOR ASSOCIATED WITH THE RENOVATION SERIES DRAWINGS AND ASSOCIATED ENLARGED ROOM PLANS OF THE NEW SERVER ROOM. REFER TO THOSE SHEETS FOR ADDITIONAL INFORMATION.

B. COORDINATE ALL PATHWAYS CLOSELY WITH THE ELECTRICAL CONTRACTOR. ENSURE EACH CONDUIT IS PROVIDED A PULL STRING AND/OR MULETAPE.

C. ANY HORIZONTAL CATEGORY COPPER INFRASTRUCTURE THAT IS SERVED WITH AN UNDERGROUND CONDUIT SHALL BE AN OUTDOOR-RATED CABLE. DO NOT INSTALL A TYPICAL PLENUM OR RISER GRADE CABLE WITHOUT THE OUTDOOR RATING.

SYMBOL LEGEND

— CATEGORY 6, UNSHIELDED TWISTED-PAIR - BLUE CABLE (PROVIDE NUMBER OF CABLES DEFINED BY '#' AT EACH LOCATION)

C — CATEGORY 6, UNSHIELDED TWISTED-PAIR - BLUE CABLE (ONE CABLE) - SERVING CAMERA SYSTEM.

WAP — CATEGORY 6, UNSHIELDED TWISTED-PAIR - BLUE CABLE (ONE CABLE) - SERVING OWNER PROVIDED WIRELESS ACCESS POINT.

EXISTING ROOF-MOUNTED ANTENNAS

ZCS
ENGINEERING
ARCHITECTURE
127 NW D Street, Grants Pass,
Oregon 97526 | 541-479-3865

REEDSPORT FIRE DISTRICT
124 N 4TH ST.
REEDSPORT, OR 97467

REEDSPORT FIRE STATION 7

KCL
ENGINEERING
199 E 5th Ave, Suite 35
Eugene, OR
97401
503-212-4612

REGISTERED PROFESSIONAL ENGINEER
97568
OREGON
SEP 14, 2021
SHYLA KEAYS-GOODMAN
EXPIRES: 6/30/2023

△	DATE:	Description

PROJECT NO.	G-1468-21
DRAWN:	JDH
CHECKED:	SKG
DATE:	01-26-23

SYSTEMS RISER DIAGRAMS

T3.2

100% CONSTRUCTION DOCUMENTS | BID / PERMIT SET

ONE INCH EQUALS FULL SCALE 4/26/2023 1:03:19 AM

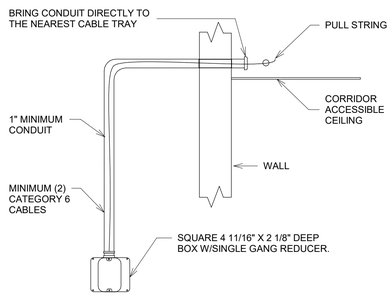

GENERAL NOTE:

A. EVERY WORK AREA OUTLET (WAO) GETS ONE TYPICAL ROUGH-IN.

3 TYPICAL WORK OUTLET CONDUIT ROUGH-IN
NOT TO SCALE

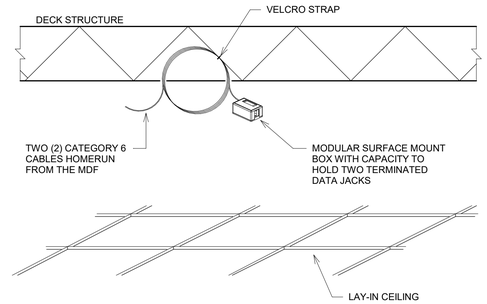

NOTES:
FOR EACH ABOVE CEILING LOCATION (CAMERAS AND WIRELESS ACCESS POINTS) PROVIDE A MODULAR SURFACE STYLE JACK. COIL 10' OF EXTRA WIRE AND ATTACH IT TO STRUCTURE WITH A VELCRO STRAP AND DO NOT ALLOW THE JACK TO BE RESTING ON CEILING TILE.

1 TYPICAL ABOVE CEILING DATA OUTLET
NOT TO SCALE

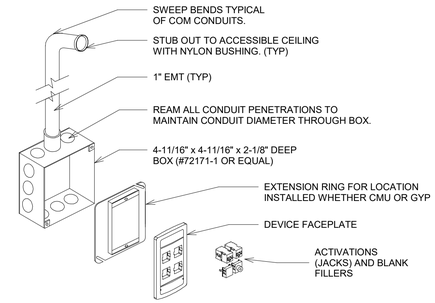

NOTES:

A. FOR EACH DATA WORK AREA OUTLET, WITH EXCEPTION TO FLAT PANEL TELEVISION LOCATIONS, PROVIDE A 2-GANG BOX WITH A SINGLE-GANG PLASTER-RING.

B. INSTALL ONE (1) 1" CONDUIT STUBBED OUT TO THE ABOVE ACCESSIBLE CEILING IN THE SAME ROOM UNLESS OTHERWISE NOTED. IF THE ROOM DOES NOT HAVE A LAY-IN GRID CEILING, ROUTE CONDUITS TO ABOVE THE NEAREST ACCESSIBLE CEILING SPACE. PROVIDE NYLON BUSHINGS ON CONDUIT ENDS TO PROTECT CABLING.

2 TYPICAL WORK OUTLET BOX DETAIL
NOT TO SCALE

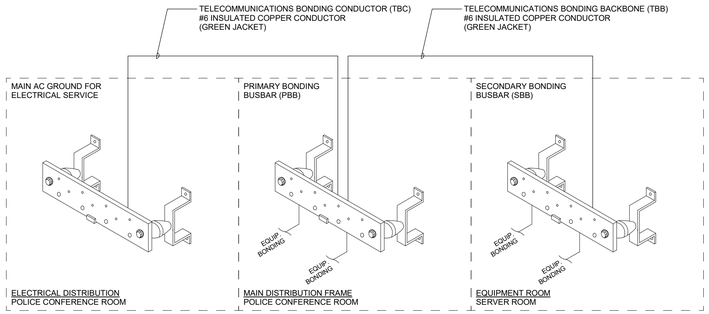

GENERAL NOTE:

A. REFER TO SPECIFICATION SECTION 27 0526 TELECOMMUNICATIONS GROUNDING AND BONDING SYSTEM FOR ADDITIONAL REQUIREMENTS. DIAGRAM IS FOR DESIGN INTENT PURPOSES AND NOT EXHAUSTIVE.

5 TELECOMMUNICATIONS GROUNDING RISER DIAGRAM
NOT TO SCALE

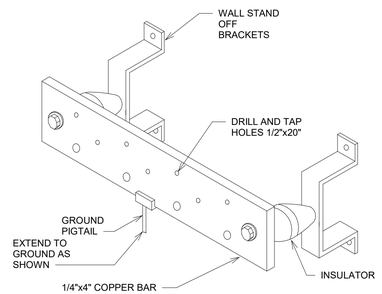

4 PRIMARY/SECONDARY BONDING BUSBAR DETAIL
NOT TO SCALE

ZCS ENGINEERING ARCHITECTURE
127 NW D Street, Grants Pass, Oregon 97526 | 541-479-3865

REEDSPORT FIRE DISTRICT
124 N 4TH ST.
REEDSPORT, OR 97467

REEDSPORT FIRE STATION 7

REEDSPORT FIRE DEPT. VOLUNTEER

KCL ENGINEERING
199 E 5th Ave, Suite 35
Eugene, OR
97401
503-212-4612

REGISTERED PROFESSIONAL ENGINEER 97568 OREGON SEP 14, 2021 SHYLA KEAYS-GOODMAN
EXPIRES: 6/30/2023

△	DATE:	Description

PROJECT NO.	G-1468-21
DRAWN:	JDH
CHECKED:	SKG
DATE:	01-26-23

SYSTEMS DETAILS

T3.3

100% CONSTRUCTION DOCUMENTS | BID / PERMIT SET

ONE INCH EQUALS FULL SCALE 4/26/2023 1:03:19 AM

AREA OF REFUGE / RESCUE ASSISTANCE SYMBOLS

- RACS — RESCUE ASSISTANCE CALL STATION
- RAPS — RESCUE ASSISTANCE POWER SUPPLY
- RAMS — RESCUE ASSISTANCE MASTER STATION

TELECOMMUNICATIONS INFRASTRUCTURE SYMBOLS

- # ▼ — UTP DATA CABLING, CATEGORY 6, '#' REPRESENTS QTY OF CABLES AT EACH DEVICE
- WAP ▼ — UTP DATA CABLING, CATEGORY 6, ONE (1) CABLE SERVING OWNER PROVIDED DEVICE
- TV — COAXIAL COPPER CABLING, RG6, ONE (1) CABLE SERVING OWNER PROVIDED DEVICE
- SEE RISER DIAGRAM AND SPECIFICATIONS FOR ADDITIONAL REQUIREMENTS

VIDEO SURVEILLANCE SYMBOLS

- VIDEO SURVEILLANCE CAMERA
- C ▼ — DATA CABLING - SINGLE CATEGORY 6 CABLE PER LOCATION FOR CAMERA USE

FIRE DETECTION AND ALARM SYMBOLS

- FACP — FIRE ALARM CONTROL PANEL

ABBREVIATIONS

A	DEVICE MOUNTED +8" ABOVE COUNTER TOP (VERIFY LOCATION)	NIC	NOT IN CONTRACT
AFF	ABOVE FINISHED FLOOR	NM	NONMETALLIC
ATS	AUTOMATIC TRANSFER SWITCH	NTS	NOT TO SCALE
C	CEILING	OC	ON CENTER
CB	CIRCUIT BREAKER	OFCI	OWNER FURNISHED CONTRACTOR INSTALLED
CT	CURRENT TRANSFORMER	OFOI	OWNER FURNISHED, OWNER INSTALLED
E	EXISTING ITEM TO REMAIN	R	EXISTING ITEM TO BE REMOVED
EC	ELECTRICAL CONTRACTOR	RR	EXISTING ITEM TO BE REMOVED AND RELOCATED
EM	EMERGENCY LIGHT FIXTURE	RN	EXISTING ITEM TO BE REMOVED AND REPLACED WITH NEW
ER	NEW LOCATION OF EXISTING ITEM	SCCR	SHORT CIRCUIT CURRENT RATING
F	ROUGH IN FOR FUTURE DEVICE	T	TAMPER PROOF DEVICE
FAAP	FIRE ALARM ANNUNCIATOR PANEL	TCC	TEMPERATURE CONTROL CONTRACTOR
FACP	FIRE ALARM CONTROL PANEL	TV	TELEVISION
FSD	FIRE SMOKE DAMPER	TYP	TYPICAL
G	GROUND FAULT CIRCUIT INTERRUPTER	UPS	UNINTERRUPTIBLE POWER SUPPLY
GND	GROUND	V	VOLTS
KVA	KILO-VOLT-AMPERES	VA	VOLT-AMPERES
KW	KILOWATTS	WG	WIREGUARD COVER
MC	MECHANICAL CONTRACTOR	WP	WEATHERPROOF DEVICE
MCB	MAIN CIRCUIT BREAKER	WR	WEATHER RESISTANT DEVICE
MDP	MAIN DISTRIBUTION PANEL	+24"	INDICATES MOUNTING HEIGHT CENTER LINE OF DEVICE TO FINISHED FLOOR
MLO	MAIN LUGS ONLY		
N	NEW DEVICE IN EXISTING LOCATION		

ACCESS CONTROL SYMBOLS

- CR — PROXIMITY CARD READER, +44" OR AS NOTED
- CP — COMBINATION PROXIMITY CARD READER WITH PINPAD, +44" OR AS NOTED
- D1 — DOOR POSITION SWITCH - FLUSH MOUNTED, DOUBLE POLE DOUBLE THROW (DPDT)
- D2 — DOOR POSITION SWITCH - SURFACE MOUNTED, DOUBLE POLE DOUBLE THROW (DPDT)
- RX — REQUEST TO EXIT - MOTION DETECTOR, MOUNTED ABOVE DOOR FRAME
- E1 — ELECTRIC STRIKE - FLUSH MOUNTED
- E2 — ELECTRIC STRIKE - SURFACE MOUNTED
- L1 — ELECTRIFIED MORTISE LOCK
- EL — ELECTRIFIED EXIT DEVICE (PANIC HARDWARE)
- ML — MAGNETIC LOCK
- EP — EMERGENCY PUSHBUTTON
- PB — REQUEST TO EXIT PUSHBUTTON

DIVISION 27 - COMMUNICATIONS

COMMUNICATIONS DEMOLITION NOTES

A. ALL EXISTING DEVICES AND DEVICE LOCATIONS WERE MADE BY CASUAL FIELD OBSERVATION. CONTRACTOR SHALL BE RESPONSIBLE FOR FIELD VERIFYING SYSTEM COMPONENTS AND DEVICE LOCATIONS.

B. PROVIDE LABOR AND MATERIALS TO REMOVE ELECTRICAL FACILITIES AND CLEAR THE AREA TO RECEIVE THE NEW WORK TO BE PROVIDED UNDER THIS CONTRACT.

C. SYSTEMS SCHEDULED TO BE REMOVED SHALL BE DONE SO IN THEIR ENTIRETY. ABANDONED CABLING SHALL NOT BE ACCEPTED. REMOVE ALL ASSOCIATED FIELD DEVICES AND HEAD END EQUIPMENT.

D. REMOVED EQUIPMENT AND SYSTEMS SHALL REMAIN THE PROPERTY OF THE OWNER UNLESS OTHERWISE NOTED. MATERIALS NOT SALVAGED BY THE OWNER SHALL BE THE RESPONSIBILITY OF THE CONTRACTOR FOR PROPER DISPOSAL.

E. REMOVE AND REINSTALL CEILING TILE REQUIRED FOR THE WORK BEING DONE UNDER THIS CONTRACT. DAMAGED CEILING TILE SHALL BE REPLACED TO MATCH EXISTING.

GROUNDING & BONDING NOTES

A. INSTALLATION OF THE COMMUNICATIONS GROUNDING AND BONDING SYSTEM SHALL BE COMPLIANT WITH TIA-607-D. REFER TO SPECIFICATION 27 05 26 FOR ADDITIONAL INFORMATION.

B. ENSURE THE MAIN BUILDING AC GROUND IS THOROUGHLY EXAMINED PRIOR TO INSTALLING THE TELECOMMUNICATIONS BONDING CONDUCTOR (TBC) TO THE PRIMARY BONDING BUSBAR (PBB).

C. THE TBC SHALL NOT EXCEED 30 FEET AND SHALL BE EQUAL IN SIZE (GAUGE) TO THE LARGEST TELECOMMUNICATIONS BONDING BACKBONE (TBB) CONDUCTOR. CONTRACTOR IS ENCOURAGED TO INSTALL THE PRIMARY BONDING BACKBONE (PBB) INSIDE THE MAIN ELECTRICAL ROOM TO KEEP TBC DISTANCES SHORT.

D. APPLY ANTI-CORROSION/OXIDATION COMPOUND TO THE LUG AND LUG SURFACE OF EACH TELECOMMUNICATIONS BUSBAR.

CABLING NOTES

A. CATEGORY CABLING SERVING DATA AND VOICE APPLICATIONS SHALL BE TESTED TO ENSURE ALL ELECTRICAL CHARACTERISTICS ARE COMPLIANT WITH THE SPECIFIED CLASSIFICATION (6 AND/OR 6A). UTILIZE FLUKE DSX EQUIPMENT OR EQUIVALENT AND PROVIDE ELECTRONIC RESULTS DURING CLOSEOUT PROCEDURES. ANY INSTANCE OF CABLING FAILING THE PERFORMANCE TEST SHALL BE RECTIFIED BY THE CONTRACTOR THROUGH RE-TERMINATION OR RUNNING NEW CABLING AT NO COST TO THE OWNER.

B. PROVIDE A CERTIFIED INSTALLATION BY THE MANUFACTURER. ENSURE THE WARRANTY IS PROVIDED AS THE SPECIFICATIONS REQUIRE.

C. WILD RETURN AIR IS EXPECTED IN THE PLENUM SPACES OF THIS PROJECT. THEREFORE, PROVIDE PLENUM RATED CABLING FOR ALL FLOWN INFRASTRUCTURE IN THE ABOVE ACCESSIBLE CEILING SPACES.

TELECOMMUNICATIONS DISTRIBUTION NOTES

A. PROVIDE PENETRATIONS AND PATHWAYS AS REQUIRED TO ROUTE ALL CABLING INFRASTRUCTURE ILLUSTRATED IN THE DRAWINGS. TREAT EACH NEW PENETRATION AS A 1-HOUR FIRE RATED WALL UNLESS OTHERWISE NOTED. PROVIDE REQUIRED FIRE STOPPING TO MAINTAIN THIS RATING.

B. REAM CONDUIT TO REMOVE BURRS AND ROUGH EDGES. PROVIDE A PROTECTIVE BUSHING AT THE END OF ANY CONDUIT STUB TO PROTECT CABLING INFRASTRUCTURE.

C. PROVIDE CABLE SUPPORT FOR ROUTING ALL NEW INFRASTRUCTURE. INSIDE OF ABOVE ACCESSIBLE CEILING SPACES, CABLING CAN BE FLOWN FREE-AIR UTILIZING J-HOOKS, BRIDLE RINGS AND OTHER ACCESSORIES TO SUPPORT CABLING. CABLE SHALL NOT BE ALLOWED TO REST ON TOP OF CEILING TILES OR TO UTILIZE GRID SUPPORT SYSTEM.

D. ALL OPEN CEILING AREAS SHALL HAVE CABLING CONCEALED IN CONDUIT. EXPOSED CABLING SHALL NOT BE ACCEPTED.

EQUIPMENT ROOM FITTINGS NOTES

A. TELECOMMUNICATIONS ROOM LAYOUT SHALL BE APPROVED BY THE OWNER PRIOR TO ANCHORING OR INSTALLING EQUIPMENT. PROVIDE A PRE-CONSTRUCTION COORDINATION MEETING AND INCLUDE DESIGN TEAM AND OWNER TO ENSURE PROPER CONFIGURATION OF SCHEDULED EQUIPMENT. ROOM LAYOUT ILLUSTRATED IN THE DRAWINGS IS FOR BID PURPOSES ONLY.

B. BIDDING CONTRACTOR SHALL HAVE THE FOLLOWING OPTIONS FOR TELECOMMUNICATION ROOM WALL COVERINGS:
   a. PROVIDE AC GRADE PLYWOOD THAT IS PAINTED ON ALL SIDES WITH TWO COATS OF A WHITE FIRE-RETARDANT PAINT.
   b. PROVIDE FIRE-RETARDANT AC GRADE PLYWOOD THAT IS PAINTED WHITE BUT LEAVING THE FIRE RETARDANT MARKINGS/SEAL EXPOSED FOR INSPECTION PURPOSES.

C. ANCHOR RACK(S) TO THE FLOOR OR WALL UTILIZING MANUFACTURER APPROVED HARDWARE.

D. PROVIDE ALL REQUIRED CABLE TRAY/RUNWAY ACCESSORIES INCLUDING BUT NOT LIMITED TO: WATERFALL RADIUS DROP, OFFSETS, BRACKETS, AND RACK ATTACHMENT HARDWARE.

E. CLEAN ALL SURFACES OF ROOM PRIOR TO OWNER'S INSTALLATION OF ACTIVE NETWORK EQUIPMENT.

TECHNOLOGY GENERAL NOTES

A. ALL NOTES APPLY TO THE FOLLOWING SERIES SHEETS: T AND TD SERIES

B. COORDINATE LOCATION/INSTALLATION OF MECHANICAL AND ELECTRICAL WORK WITH ALL OTHER TRADES. NO ASPECT OF A SYSTEM INSTALLATION OR ITS ROUGH-IN SHALL COMMENCE UNTIL PROPER AND TIMELY COORDINATION WITH ALL TRADES ASSOCIATED WITH THE INSTALLATION HAS TRANSPIRED. ITEMS TO BE COORDINATED SHALL INCLUDE BUT NOT BE LIMITED TO: BUILDING STRUCTURE, SHEET METAL, ALL PIPING SYSTEMS, LIGHT FIXTURES, CONDUITS, CABLE TRAYS, ETC. REFER TO ALL GENERAL, MECHANICAL, AND ELECTRICAL DRAWINGS AND SPECIFICATIONS FOR THIS PROJECT. ANY REWORK OF INSTALLED EQUIPMENT WILL BE AT THE CONTRACTOR'S EXPENSE.

C. INCORPORATE INTO INSTALLATION COMMUNICATIONS AND LIFE SAFETY/SECURITY SYSTEM SPECIFICATIONS, DRAWINGS, STATE AND LOCAL CODES, AND OTHER APPLICABLE REQUIREMENTS.

D. EACH TRADE IS RESPONSIBLE TO MAKE PENETRATIONS WHERE REQUIRED IN EXISTING OR NEW WALLS, FLOORS, AND CEILINGS. PENETRATIONS SHALL BE NEAT. ANY OVERCUT SHALL BE CONCEALED OR CAULKED.

E. ALL NEW CONDUITS SHALL BE PROVIDED A PULL STRING TO ALLOW EASE OF CABLE INSTALLATION.

DIVISION 28 - LIFE SAFETY & SECURITY

LIFE SAFETY & SECURITY DEMOLITION NOTES

A. ALL EXISTING DEVICES AND DEVICE LOCATIONS WERE MADE BY CASUAL FIELD OBSERVATION. CONTRACTOR SHALL BE RESPONSIBLE FOR FIELD VERIFYING SYSTEM COMPONENTS AND DEVICE LOCATIONS.

B. PROVIDE LABOR AND MATERIALS TO REMOVE ELECTRICAL FACILITIES AND CLEAR THE AREA TO RECEIVE THE NEW WORK TO BE PROVIDED UNDER THIS CONTRACT.

C. SYSTEMS SCHEDULED TO BE REMOVED SHALL BE DONE SO IN THEIR ENTIRETY. ABANDONED CABLING SHALL NOT BE ACCEPTED. REMOVE ALL ASSOCIATED FIELD DEVICES AND HEAD END EQUIPMENT.

D. REMOVED EQUIPMENT AND SYSTEMS SHALL REMAIN THE PROPERTY OF THE OWNER UNLESS OTHERWISE NOTED. MATERIALS NOT SALVAGED BY THE OWNER SHALL BE THE RESPONSIBILITY OF THE CONTRACTOR FOR PROPER DISPOSAL.

E. REMOVE AND REINSTALL CEILING TILE REQUIRED FOR THE WORK BEING DONE UNDER THIS CONTRACT. DAMAGED CEILING TILE SHALL BE REPLACED TO MATCH EXISTING.

F. DO NOT CUT EXISTING TELECOMMUNICATIONS WIRING, CABLES OR CONDUIT AS EXISTING SYSTEMS SHALL REMAIN OPERATIONAL DURING CONSTRUCTION. CONTRACTOR WHO CUTS IN-SERVICE CABLES SHALL BE RESPONSIBLE FOR DOWNTIME AND THE COSTS TO REPAIR.

VIDEO MANAGEMENT NOTES

A. EXTEND THE EXISTING LOREX VIDEO MANAGEMENT SYSTEM. PROVIDE REQUIRED PATHWAYS, CABLING AND ROUGH-IN REQUIREMENTS IN ADDITION TO THE DEVICES.

SHEET INDEX - TECHNOLOGY

Sheet Number	Sheet Name
T0.1	TECHNOLOGY GENERAL NOTES & SYMBOLS
T0.2	SITE PLAN - SYSTEMS
TD1.1	FIRST FLOOR DEMO PLAN - SYSTEMS
TD1.2	SECOND FLOOR DEMO PLAN - SYSTEMS
TD1.3	ROOF DEMO PLAN - SYSTEMS
T1.1	FIRST FLOOR PLAN - SYSTEMS
T1.2	SECOND FLOOR PLAN - SYSTEMS
T1.3	ENLARGED PLAN - EXISTING SERVER ROOM
T1.4	ENLARGED PLAN - EXISTING DISPATCH OFFICE
T1.5	ENLARGED PLAN - EXISTING POLICE CONFERENCE ROOM
T1.6	ENLARGED PLAN - NEW SERVER ROOM
T3.1	SYSTEMS RISER DIAGRAMS
T3.2	SYSTEMS RISER DIAGRAMS
T3.3	SYSTEMS DETAILS

TECHNOLOGY RESPONSIBILITY MATRIX

PROVISION RESPONSIBILITIES DEFINED	OFOI	OFCI	CFCI	CFOI
COMMUNICATIONS - TELECOM SYSTEMS:				
ROUGH-IN, PATHWAYS AND SLEEVES			●	
RACKS, FRAMES AND ENCLOSURES			●	
CABLE MANAGEMENT			●	
UNINTERRUPTIBLE POWER SUPPLIES (RACK MOUNT)			●	
PLYWOOD BACKBOARDS			●	
COPPER BACKBONE CABLING			●	
OPTICAL FIBER BACKBONE CABLING			●	
COAXIAL BACKBONE CABLING			●	
COPPER HORIZONTAL CABLING			●	
COAXIAL HORIZONTAL CABLING			●	
DATA COMMUNICATIONS SWITCHES AND HUBS	●			
DATA COMMUNICATIONS WIRELESS ACCESS POINTS		●		
VOICE COMMUNICATIONS SWITCHING AND ROUTING EQUIPMENT	●			
COMMUNICATIONS - AUDIO-VISUAL SYSTEMS:				
ROUGH-IN, PATHWAYS AND SLEEVES			●	
FLAT PANEL DISPLAY(S)		●		
DISPLAY TECHNOLOGY MOUNTING HARDWARE		●		
COMMUNICATIONS - DISTRIBUTED SYSTEMS:				
ROUGH-IN, PATHWAYS AND SLEEVES			●	
SECURITY - ACCESS CONTROL:				
ROUGH-IN, PATHWAYS AND SLEEVES			●	
SECURITY - VIDEO INTERCOM:				
ROUGH-IN, PATHWAYS AND SLEEVES	NA	NA	NA	NA
DOOR STATION(S)	NA	NA	NA	NA
HEAD END EQUIPMENT AND COMPONENTS	NA	NA	NA	NA
SECURITY - VIDEO SURVEILLANCE:				
ROUGH-IN, PATHWAYS AND SLEEVES			●	
CAMERA(S)			●	
HEAD END EQUIPMENT AND COMPONENTS			●	
SAFETY - FIRE DETECTION AND ALARM:				
ROUGH-IN, PATHWAYS AND SLEEVES	NA	NA	NA	NA
INITIATING FIELD DEVICES (SMOKE, MANUAL PULL, MONITOR MODULES)	NA	NA	NA	NA
NOTIFICATION APPLIANCES (HORNS, STROBES, SPEAKERS)	NA	NA	NA	NA
MISCELLANEOUS DEVICES (RELAYS, TEST STATION, ANNUNCIATOR)	NA	NA	NA	NA

- ● OFOI — OWNER FURNISHED & OWNER INSTALLED
- ● OFCI — OWNER FURNISHED & CONTRACTOR INSTALLED
- ● CFCI — CONTRACTOR FURNISHED & CONTRACTOR INSTALLED
- ● CFOI — CONTRACTOR FURNISHED & OWNER INSTALLED

GENERAL NOTE:

A. MATRIX IS NOT INTENDED TO BE EXHAUSTIVE TO COVER ALL MATERIALS NECESSARY FOR SCOPE AND SHOULD ONLY BE USED TO QUICKLY IDENTIFY SYSTEMS AND RELATED INFRASTRUCTURE INSIDE AND OUTSIDE THE BID OF THIS PROJECT. ANY ITEMS FURNISHED OR INSTALLED BY THE BIDDING CONTRACTOR SHALL COVER ALL REQUIRED APPERTUNANCES NECESSARY FOR A COMPLETE SYSTEM. THIS SHALL INCLUDE BUT NOT BE LIMITED TO, EQUIPMENT, ACCESSORIES, TERMINATIONS, TERMINATION COMPONENTS, ALL FINAL CORDAGE CONNECTIVITY, SOFTWARE, PROGRAMMING, AND THE LABOR TO INSTALL.

ZCS ENGINEERING ARCHITECTURE
127 NW D Street, Grants Pass, Oregon 97526 | 541-479-3865

REEDSPORT FIRE DISTRICT
124 N 4TH ST.
REEDSPORT, OR 97467

REEDSPORT FIRE STATION 7

KCL ENGINEERING
199 E 5th Ave, Suite 35
Eugene, OR
97401
503-212-4612

REGISTERED PROFESSIONAL ENGINEER 97568 OREGON SEP. 14, 2021 SHYLA KEAYS-GOODMAN
EXPIRES: 6/30/2023

△	DATE:	Description

PROJECT NO.	G-1468-21
DRAWN:	JDH
CHECKED:	SKG
DATE:	01-26-23

TECHNOLOGY GENERAL NOTES & SYMBOLS

T0.1

100% CONSTRUCTION DOCUMENTS | BID / PERMIT SET

ONE INCH EQUALS FULL SCALE 4/26/2023 1:03:14 AM

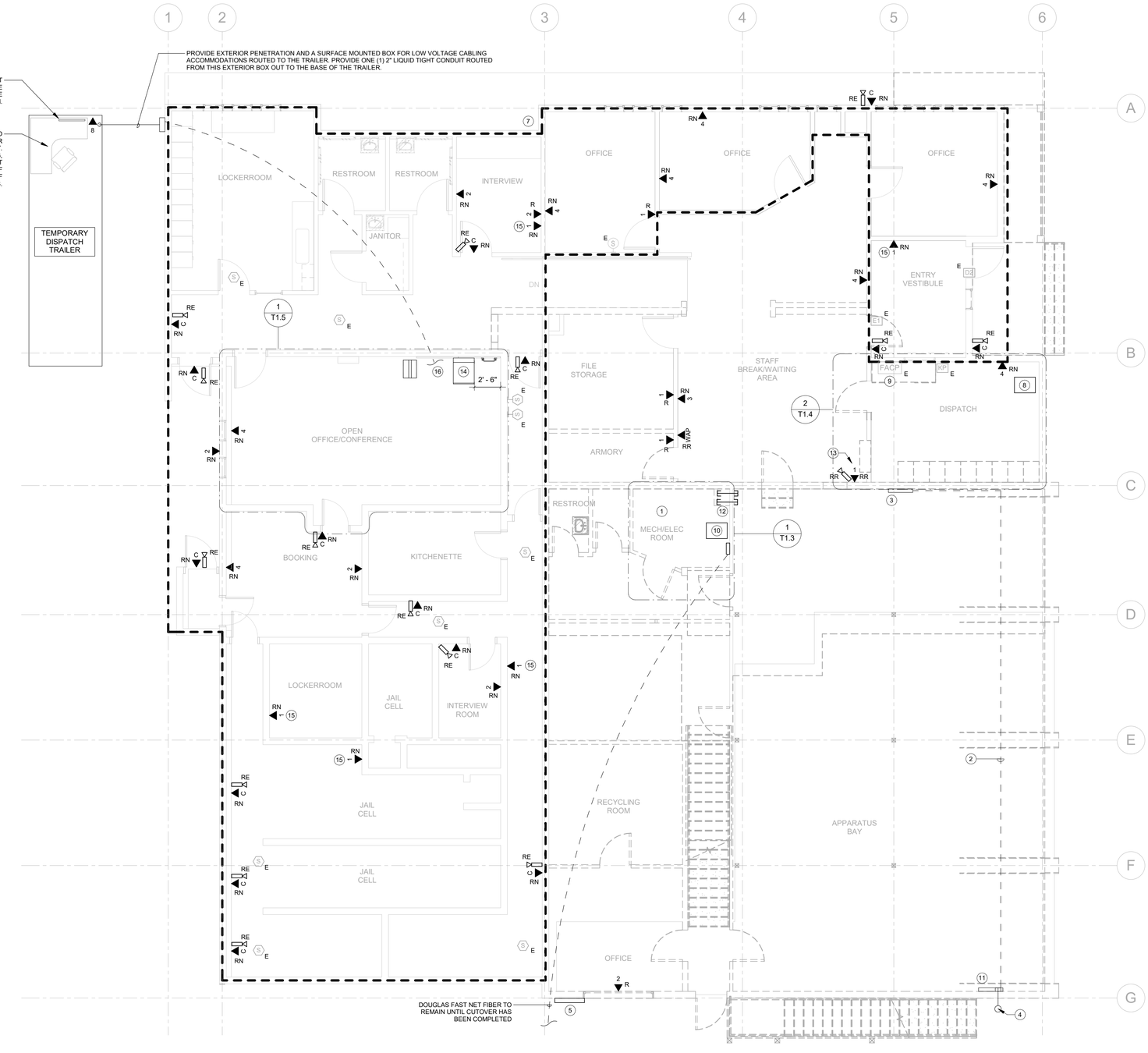

1 TD1.1 TECHNOLOGY - FIRST FLOOR PLAN DEMO
3/16" = 1'-0"

KEYNOTE INDICATES ITEM IS PART OF REMODEL SCOPE OF WORK AND NOT SEISMIC RETROFIT RELATED. ALL BIDS SHALL CONTAIN SEPARATE LINE-ITEM PRICING THAT DISTINGUISHES REMODEL RELATED SCOPE OF WORK FROM SEISMIC RELATED SCOPE OF WORK.

TECHNOLOGY DEMOLITION NOTES

A. DEMOLITION DRAWINGS PRESENT LAYOUT OF EXISTING CONDITIONS AND MAJOR MECHANICAL/ELECTRICAL ITEMS. THEY ARE NOT TO BE CONSTRUED AS COMPLETE IN REPRESENTATION OF ACCESSORIES AND INCIDENTALS TO BE REMOVED, REPLACED, OR REWORKED. NOR SHOULD ACCESSIBILITY BE INFERRED. THE CONTRACTOR IS RESPONSIBLE TO FAMILIARIZE THEMSELVES WITH THE BUILDING AND EXISTING CONDITIONS, PRIOR TO THE SUBMITTING OF A BID FOR THIS PROJECT.

B. REMOVE ELECTRICAL FACILITIES AND CLEAR THE AREA TO RECEIVE THE NEW WORK TO BE PROVIDED UNDER THIS CONTRACT.

C. THIS DEMOLITION DRAWING SHOWING EXISTING CONDITIONS HAS BEEN PREPARED BASED ON FIELD OBSERVATION AND ORIGINAL DRAWINGS. ADDITIONAL COMPONENTS MAY EXIST WHICH DO NOT SHOW, AND SUCH ITEMS SHALL BE DEALT WITH IN A MANNER SIMILAR TO THOSE ITEMS WHICH DO SHOW. CONTRACTOR SHALL VISIT THE SITE AND BECOME FAMILIAR WITH EXISTING CONDITIONS.

D. CONDUITS, BOXES, ETC., SHALL BE REMOVED AS REQUIRED BY WALL AND CEILING DEMOLITION AND REMOVALS. WIRING SHALL BE REMOVED. ALL WIRING FOR THE REMODELED AREAS SHALL BE NEW UNLESS SPECIFICALLY NOTED OTHERWISE.

E. CONTRACTOR SHALL THOROUGHLY FAMILIARIZE HIMSELF WITH EXISTING TELECOMMUNICATIONS SYSTEM WHICH WILL BE AFFECTED BY THE DEMOLITION WORK. CONTRACTOR SHALL OBTAIN PERMISSION FROM OWNER'S REPRESENTATIVE TO SHUT OFF SERVICES OR SYSTEMS WHICH MAY AFFECT OTHER AREAS BEYOND THE LIMITS OF THE IMMEDIATE DEMOLITION AREA. SUCH PERMISSION WILL BE GRANTED ONLY AFTER OWNER'S REPRESENTATIVE IS INFORMED OF THE REASON FOR AND DURATION OF THE SHUTDOWN AND IS SATISFIED THAT THE SHUTDOWN CAN BE MADE WITH AS LITTLE INCONVENIENCE TO OTHER AREAS AS POSSIBLE.

F. DEVICES SHOWN ON PLANS SHALL BE REMOVED UNLESS NOTED OTHERWISE. REMOVAL SHALL BE DONE IN A TIMELY MANNER IN ACCORDANCE WITH THE GENERAL DEMOLITION WORK. COORDINATE WITH THE OWNER AND OTHER CONTRACTORS.

G. ABBREVIATIONS:
- (E) - EXISTING ITEM TO REMAIN
- (D) - DEMOLISHED ITEM
- (ER) - NEW LOCATION OF EXISTING ITEM
- (N) - NEW ITEM IN EXISTING LOCATION
- (R) - EXISTING ITEM TO BE REMOVED, PATCH AND/OR COVER
- (RN) - REPLACE EXISTING WITH NEW
- (RR) - EXISTING ITEM TO BE REMOVED AND RELOCATED
- (RE) - EXISTING ITEM TO BE REMOVED AND REINSTALLED

KEYNOTES (#)

1. EXISTING TELECOMMUNICATIONS ROOM SERVING POLICE, FIRE AND DISPATCH OPERATOR'S INTERNET AND TELEPHONE SERVICES. ROOM ALSO HOSTS A RADIO EQUIPMENT RACK ALONG WITH A FIBER OPTIC CABLE THAT SERVES THE CITY HALL BUILDING. ROOM WILL BE REQUIRED TO EMPTY OUT TO ALLOW FOR SEISMIC IMPROVEMENTS. CONTRACTOR WILL BE REQUIRED TO PRODUCE AN ORDERLY CUTOVER PLAN TO ACHIEVE MINIMAL DOWNTIME.

2. INACTIVE SERVICE PROVIDER-OWNED TELEPHONE COPPER CABLING. CABLING SHALL BE REMOVED IN ITS ENTIRETY. CONTACT ZIPLY TO COORDINATE THIS REMOVAL.

3. INTERIOR TELECOMMUNICATIONS COPPER DEMARCATION PANEL. CABLING AND ENCLOSURE SHALL BE REMOVED IN ITS ENTIRETY.

4. EXISTING SURFACE CONDUIT AND WEATHERHEAD ENTRANCE SERVING TELEPHONE COPPER LOCATED APPROXIMATELY 12'-0" ABOVE GRADE.

5. SURFACE BOX AND ASSOCIATED SERVICE PROVIDER COAXIAL CABLING TO BE REMOVED IN ITS ENTIRETY.

6. EXISTING DISPATCH OPERATOR ROOM SERVING EMERGENCY RESPONDER SERVICES. ROOM HOSTS A 2-POST EQUIPMENT RACK THAT SERVES DISPATCH OPERATIONS. A NEW 2-POST RACK SHALL BE ANCHORED IN THE POLICE CONFERENCE ROOM. RELOCATE ALL RACK EQUIPMENT TO THIS LOCATION. RELOCATE OPERATOR FURNITURE AND ASSOCIATED PERIPHERAL EQUIPMENT NECESSARY FOR DISPATCH OPERATIONS TO THE TEMPORARY TRAILER.

7. AREAS WITHIN THESE BOUNDARIES ILLUSTRATE SPACES THAT MUST REMAIN OPERATIONAL DURING CONSTRUCTION. PRIOR TO DEMOLISHING THE IDENTIFIED CABLING, INSTALL TWO NEW TELECOMMUNICATIONS RACKS IN THE POLICE DEPARTMENT'S CONFERENCE ROOM. PROVIDE NEW REPLACEMENT DATA CABLING FROM THIS CONFERENCE ROOM RACK TO EACH DATA WORK AREA OUTLET ILLUSTRATED IN THESE DRAWINGS. CUT OVER EACH INSTANCE ONE AT A TIME. ONCE ALL INFRASTRUCTURE IS CUTOVER TO THE NEW TELECOMMUNICATIONS CABINET, DEMOLISH EXISTING CABLING BACK TO ITS ORIGIN. ABANDONED CABLING SHALL NOT BE ACCEPTED.

(!) 8. DISPATCH OPERATOR'S EXISTING 2-POST EQUIPMENT RACK SERVING OPERATIONAL NEEDS AND NETWORK CONNECTIVITY. EQUIPMENT SHALL BE RELOCATED TO THE NEWLY ANCHORED 2-POST RACK INSIDE THE POLICE CONFERENCE ROOM.

9. EXISTING ARITECH-750 FIRE DETECTION AND ALARM CONTROL PANEL TO REMAIN. PANEL SERVES THE JAIL FIELD DEVICES. MAINTAIN EXISTING SYSTEM AND PROTECT FOR THE DURATION OF CONSTRUCTION.

10. EXISTING 2-POST RADIO EQUIPMENT RACK. EQUIPMENT SHALL BE RELOCATED TO THE NEWLY ANCHORED 2-POST RACK INSIDE THE POLICE CONFERENCE ROOM.

11. EXISTING SURFACE MOUNTED BOX SERVING INACTIVE COPPER TELECOMMUNICATIONS INFRASTRUCTURE. DEMOLISH SURFACE BOXES, CABLING AND ASSOCIATED PLYWOOD BACKBOARD IN ITS ENTIRETY. COORDINATE THIS REMOVAL WITH ZIPLY.

12. EXISTING TELECOMMUNICATIONS COPPER CABLING INFRASTRUCTURE ROUTED THROUGH CONCRETE MASONRY. CABLING SHALL BE REMOVED IN ITS ENTIRETY AND BACK TO THE SOURCE.

13. CORNER-MOUNTED FLAT PANEL DISPLAY SERVING THE LOREX CAMERA SYSTEM. REMOVE THE PANEL AND ASSOCIATED CABLING SERVING THE DISPLAY. PROTECT FOR REINSTALLATION IN THE RENOVATION.

14. NEWLY PROPOSED TELECOMMUNICATIONS DISTRIBUTION SPACE INSIDE THE EXISTING POLICE DEPARTMENT CONFERENCE ROOM. PROVIDE ONE (1) NEW WALL MOUNT CABINET AND TWO (2) NEW 2-POST RACKS. WALL MOUNT CABINET SHALL SERVE TELECOMMUNICATIONS DISTRIBUTION CABLING AND EQUIPMENT. REFER TO THE DETAILS SHEETS FOR RACK DIAGRAMS AND SCHEDULES.

15. INMATE TELEPHONE SYSTEM. RE-SERVE THIS DEVICE WITH NEW DATA CABLING FROM THE NEW POLICE CONFERENCE ROOM TELECOMMUNICATIONS CABINET.

16. PROVIDE EIGHT (8) OUTDOOR-RATED CATEGORY 6 CABLES ROUTED FROM THE TEMPORARY DISPATCH TRAILER TO THE POLICE DEPARTMENT CONFERENCE ROOM. THESE CABLES SHALL SERVE TEMPORARY CONNECTIVITY NEEDS TO THE DISPATCH OPERATOR AND THE ASSOCIATED WORKSTATION. TERMINATE CABLING IN THE TRAILER TO TWO 4-PORT SURFACE MOUNT STYLE JACKS. TERMINATE CABLING IN THE CONFERENCE ROOM TO MODULAR JACKS AND INSTALL INSIDE THE PATCH PANEL. CABLING SHALL BE FULLY REMOVED AFTER DISPATCH MOVES BACK INTO THE BUILDING.

ZCS ENGINEERING ARCHITECTURE
127 NW D Street, Grants Pass, Oregon 97526 | 541-479-3865

REEDSPORT FIRE DISTRICT
124 N 4TH ST.
REEDSPORT, OR 97467

REEDSPORT FIRE STATION 7

KCL ENGINEERING
199 E 5th Ave, Suite 35
Eugene, OR
97401
503-212-4612

REGISTERED PROFESSIONAL ENGINEER 97568 OREGON SEP 14, 2021 SHYLA KEAYS-GOODMAN
EXPIRES: 6/30/2023

△	DATE:	Description

PROJECT NO.	G-1468-21
DRAWN:	JDH
CHECKED:	SKG
DATE:	01-26-23

FIRST FLOOR DEMO PLAN - SYSTEMS

TD1.1

100% CONSTRUCTION DOCUMENTS | BID / PERMIT SET

ONE INCH EQUALS FULL SCALE 4/26/2023 1:03:20 AM

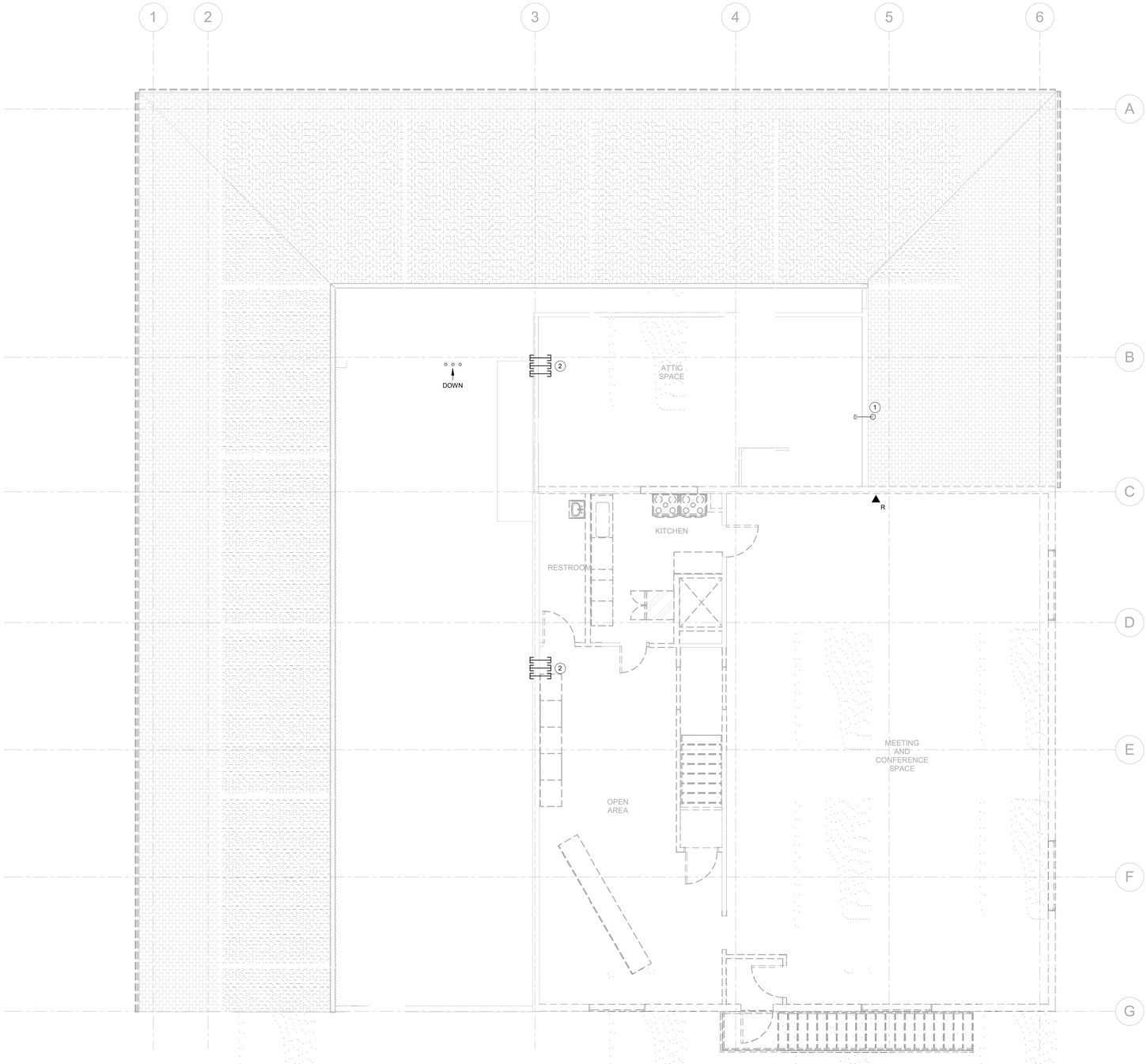

1 TD1.2 TECHNOLOGY - SECOND FLOOR PLAN DEMO
3/16" = 1'-0"

TECHNOLOGY DEMOLITION NOTES

A. DEMOLITION DRAWINGS PRESENT LAYOUT OF EXISTING CONDITIONS AND MAJOR MECHANICAL/ELECTRICAL ITEMS. THEY ARE NOT TO BE CONSTRUED AS COMPLETE IN REPRESENTATION OF ACCESSORIES AND INCIDENTALS TO BE REMOVED, REPLACED, OR REWORKED. NOR SHOULD ACCESSIBILITY BE INFERRED. THE CONTRACTOR IS RESPONSIBLE TO FAMILIARIZE THEMSELVES WITH THE BUILDING AND EXISTING CONDITIONS, PRIOR TO THE SUBMITTING OF A BID FOR THIS PROJECT.

B. REMOVE ELECTRICAL FACILITIES AND CLEAR THE AREA TO RECEIVE THE NEW WORK TO BE PROVIDED UNDER THIS CONTRACT.

C. THIS DEMOLITION DRAWING SHOWING EXISTING CONDITIONS HAS BEEN PREPARED BASED ON FIELD OBSERVATION AND ORIGINAL DRAWINGS. ADDITIONAL COMPONENTS MAY EXIST WHICH DO NOT SHOW, AND SUCH ITEMS SHALL BE DEALT WITH IN A MANNER SIMILAR TO THOSE ITEMS WHICH DO SHOW. CONTRACTOR SHALL VISIT THE SITE AND BECOME FAMILIAR WITH EXISTING CONDITIONS.

D. CONDUITS, BOXES, ETC., SHALL BE REMOVED AS REQUIRED BY WALL AND CEILING DEMOLITION AND REMOVALS. WIRING SHALL BE REMOVED. ALL WIRING FOR THE REMODELED AREAS SHALL BE NEW UNLESS SPECIFICALLY NOTED OTHERWISE.

E. CONTRACTOR SHALL THOROUGHLY FAMILIARIZE HIMSELF WITH EXISTING TELECOMMUNICATIONS SYSTEM WHICH WILL BE AFFECTED BY THE DEMOLITION WORK. CONTRACTOR SHALL OBTAIN PERMISSION FROM OWNER'S REPRESENTATIVE TO SHUT OFF SERVICES OR SYSTEMS WHICH MAY AFFECT OTHER AREAS BEYOND THE LIMITS OF THE IMMEDIATE DEMOLITION AREA. SUCH PERMISSION WILL BE GRANTED ONLY AFTER OWNER'S REPRESENTATIVE IS INFORMED OF THE REASON FOR AND DURATION OF THE SHUTDOWN AND IS SATISFIED THAT THE SHUTDOWN CAN BE MADE WITH AS LITTLE INCONVENIENCE TO OTHER AREAS AS POSSIBLE.

F. DEVICES SHOWN ON PLANS SHALL BE REMOVED UNLESS NOTED OTHERWISE. REMOVAL SHALL BE DONE IN A TIMELY MANNER IN ACCORDANCE WITH THE GENERAL DEMOLITION WORK. COORDINATE WITH THE OWNER AND OTHER CONTRACTORS.

G. ABBREVIATIONS:
(E) - EXISTING ITEM TO REMAIN
(D) - DEMOLISHED ITEM
(ER) - NEW LOCATION OF EXISTING ITEM
(N) - NEW ITEM IN EXISTING LOCATION
(R) - EXISTING ITEM TO BE REMOVED, PATCH AND/OR COVER
(RN) - REPLACE EXISTING WITH NEW
(RR) - EXISTING ITEM TO BE REMOVED AND RELOCATED
(RE) - EXISTING ITEM TO BE REMOVED AND REINSTALLED

KEYNOTES (#)

1. PROVIDE A NEW WEATHER-HEAD STYLE ROOF PENETRATION TO SERVE THE ROOF-MOUNT ANTENNAS.

2. PROVIDE THREE (3) 2" CONDUIT SLEEVES TO ALLOW FOR LOW VOLTAGE CABLING TO ROUTE THROUGH THE ATTIC SPACE. PROVIDE FIRE STOPPING AFTER CABLING INSTALLATION IS COMPLETE.

ZCS ENGINEERING ARCHITECTURE
127 NW D Street, Grants Pass, Oregon 97526 | 541-479-3865

REEDSPORT FIRE DISTRICT
124 N 4TH ST.
REEDSPORT, OR 97467

REEDSPORT FIRE STATION 7

KCL ENGINEERING
199 E 5th Ave, Suite 35
Eugene, OR
97401
503-212-4612

REGISTERED PROFESSIONAL ENGINEER 97568 OREGON SEP. 14, 2021 SHYLA KEAYS-GOODMAN
EXPIRES: 6/30/2023

△	DATE:	Description

PROJECT NO.	G-1468-21
DRAWN:	JDH
CHECKED:	SKG
DATE:	01-26-23

SECOND FLOOR DEMO PLAN - SYSTEMS

TD1.2

100% CONSTRUCTION DOCUMENTS | BID / PERMIT SET

ONE INCH EQUALS FULL SCALE

4/26/2023 1:03:22 AM

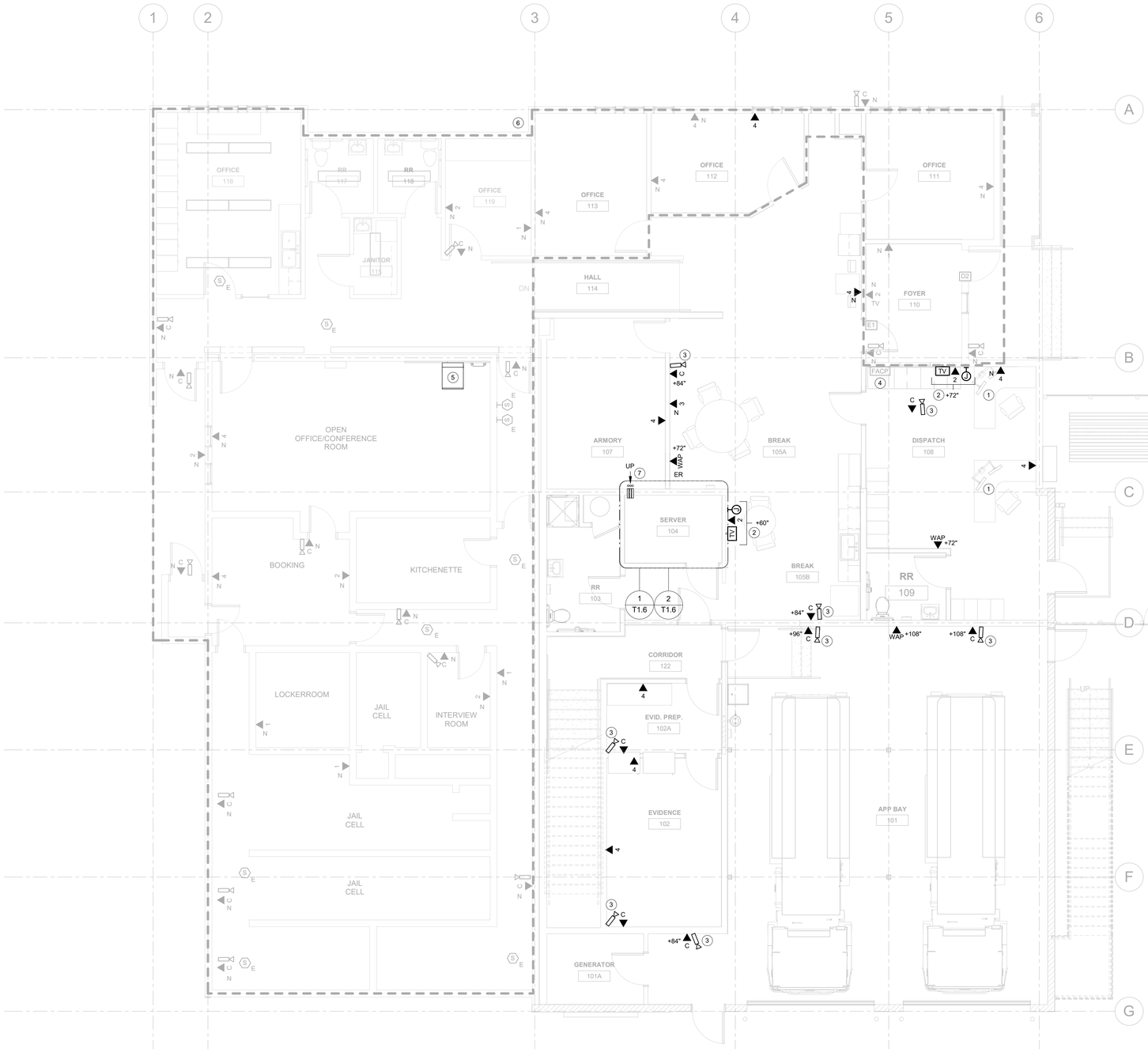

SYSTEMS GENERAL NOTES

A. COORDINATE LOCATION/INSTALLATION OF MECHANICAL AND ELECTRICAL WORK WITH ALL OTHER TRADES. NO ASPECT OF A SYSTEM INSTALLATION OR ITS ROUGH-IN SHALL COMMENCE UNTIL PROPER AND TIMELY COORDINATION WITH ALL TRADES ASSOCIATED WITH THE INSTALLATION HAS TRANSPIRED. ITEMS TO BE COORDINATED SHALL INCLUDE BUT NOT BE LIMITED TO: BUILDING STRUCTURE, SHEET METAL, PIPING SYSTEMS, LIGHT FIXTURES, CONDUITS, CABLE TRAYS, ETC. REFER TO ALL GENERAL, MECHANICAL, AND ELECTRICAL DRAWINGS AND SPECIFICATIONS FOR THIS PROJECT.

B. PROVIDE PENETRATIONS REQUIRED FOR ROUTING CABLING AND RACEWAYS THROUGH THE BUILDING. COORDINATE FIRE RATED WALL PENETRATIONS AND PROVIDE CONDUIT SLEEVES AND FIRE STOPPING TO MAINTAIN RATING.

C. PROVIDE J-HOOKS, BRIDLE RINGS AND OTHER ACCESSORIES REQUIRED TO SUPPORT ALL TELECOMMUNICATIONS AND SECURITY MANAGEMENT SYSTEM CABLING.

KEYNOTES (#)

(!) 1. DISPATCH OPERATOR CONSOLE HOSTS REMOTE UNLOCK CAPABILITY FOR FOYER DOOR 110. RESTORE THIS FUNCTIONALITY AND ROUTE APPROPRIATE LOW VOLTAGE CABLING FROM THE TELEX RACK EQUIPMENT THROUGH A POWER SUPPLY THAT SERVES THE EXISTING ELECTRIC STRIKE.

2. FLAT PANEL DISPLAY LOCATION. PROVIDE DEVICE ACCOMMODATIONS AS ILLUSTRATED ALONG WITH REQUIRED ACCESSORIES, MOUNT AND LABOR TO REINSTALL THE EXISTING FLAT PANEL DISPLAY. JUNCTION BOX ILLUSTRATED IN THE DEVICE CLUSTER IS TO SERVE HDMI VIDEO CONNECTIVITY FROM THE LOREX NETWORK VIDEO RECORDER. PROVIDE VIDEO OVER TWISTED PAIR HDMI EXTENSION FROM THE LOREX DEVICE TO EACH DISPLAY ILLUSTRATED.

(!) 3. PROVIDE ONE (1) NEW VIDEO SURVEILLANCE CAMERA EQUAL TO LOREX 4K NOCTURNAL 4 SERIES IP DOME CAMERA IN THE COLOR WHITE. PROVIDE ASSOCIATED CATEGORY 6 CABLING ROUTED FROM THE POLICE CONFERENCE ROOM TO EACH CAMERA ILLUSTRATED. TERMINATE CABLING TO A SURFACE MOUNT JACK INSIDE OF A BACKBOX. MAKE THE FINAL CONNECTION USING A MANUFACTURER TERMINATED PATCH CABLE. MAKE ALL FIELD OF VIEW ADJUSTMENTS UNDER THE SUPERVISION OF THE CITY STAFF TO ENSURE EACH CAMERA'S COVERAGE REQUIREMENTS ARE MET.

4. EXISTING ARITECH-750 FIRE DETECTION AND ALARM CONTROL PANEL TO REMAIN. PANEL SERVES THE JAIL FIELD DEVICES. MAINTAIN EXISTING SYSTEM AND PROTECT FOR THE DURATION OF CONSTRUCTION.

5. ALL NEWLY ILLUSTRATED DATA CONNECTIVITY IN THIS NEW CONSTRUCTION PHASE SHALL BE SOURCED FROM THE TELECOMMUNICATIONS WALL CABINET INSIDE THE POLICE CONFERENCE ROOM UNLESS OTHERWISE NOTED.

6. ALL DEVICES, INFRASTRUCTURE AND ASSOCIATED LABOR TO INSTALL ILLUSTRATED INSIDE THIS BOUNDARY SHALL BE PROVIDED PREVIOUS TO THE START OF ANY SEISMIC IMPROVEMENT OR OTHER GENERAL CONSTRUCTION ACTIVITIES. REFER TO THE ELECTRICAL AND SYSTEMS DEMOLITION SERIES DRAWINGS FOR MORE INFORMATION.

7. PROVIDE THREE (3) 2" CONDUIT PENETRATIONS UP TO THE ATTIC SPACE. THESE CONDUITS SHALL SERVE FUTURE LOW VOLTAGE CABLING PATHWAYS BACK TO THE SERVER ROOM. PROVIDE PROTECTIVE BUSHINGS AND FIRE STOPPING ONCE PATHWAYS ARE INSTALLED.

(!) KEYNOTE INDICATES ITEM IS PART OF REMODEL SCOPE OF WORK AND NOT SEISMIC RETROFIT RELATED. ALL BIDS SHALL CONTAIN SEPARATE LINE-ITEM PRICING THAT DISTINGUISHES REMODEL RELATED SCOPE OF WORK FROM SEISMIC RELATED SCOPE OF WORK.

1 / T1.1 SYSTEMS - FIRST FLOOR PLAN
3/16" = 1'-0"

ONE INCH EQUALS FULL SCALE 4/26/2023 1:03:15 AM

ZCS ENGINEERING ARCHITECTURE
127 NW D Street, Grants Pass, Oregon 97526 | 541-479-3865

REEDSPORT FIRE DISTRICT
124 N 4TH ST.
REEDSPORT, OR 97467

REEDSPORT FIRE STATION 7

KCL ENGINEERING
199 E 5th Ave, Suite 35
Eugene, OR
97401
503-212-4612

REGISTERED PROFESSIONAL ENGINEER 97568 OREGON SEP 14, 2021 SHYLA KEAYS-GOODMAN
EXPIRES: 6/30/2023

△	DATE:	Description

PROJECT NO.	G-1468-21
DRAWN:	JDH
CHECKED:	SKG
DATE:	01-26-23

FIRST FLOOR PLAN - SYSTEMS

T1.1

100% CONSTRUCTION DOCUMENTS | BID / PERMIT SET

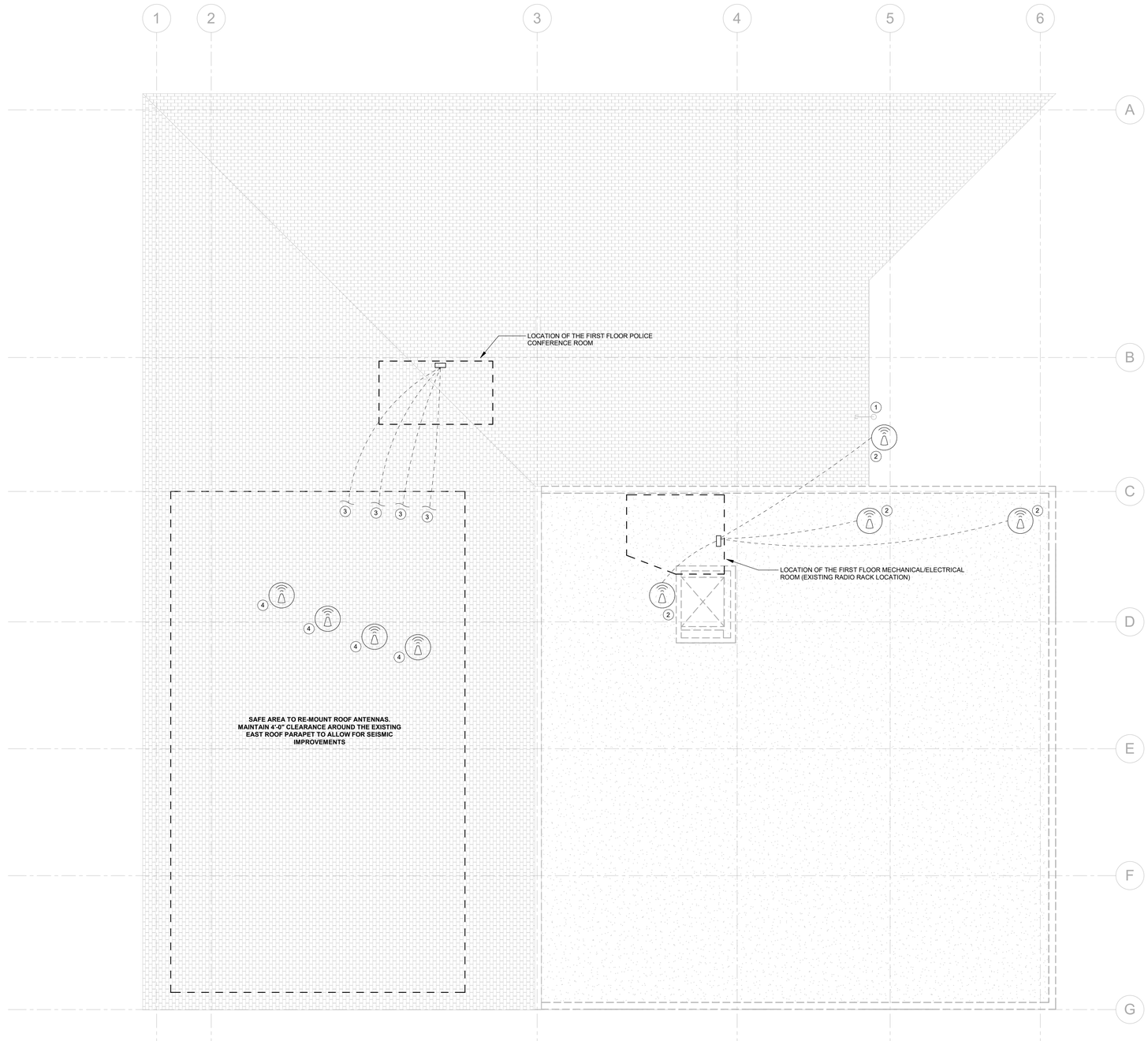

1 TD1.3 TECHNOLOGY - ROOF DEMO
3/16" = 1'-0"

TECHNOLOGY DEMOLITION NOTES

A. DEMOLITION DRAWINGS PRESENT LAYOUT OF EXISTING CONDITIONS AND MAJOR MECHANICAL/ELECTRICAL ITEMS. THEY ARE NOT TO BE CONSTRUED AS COMPLETE IN REPRESENTATION OF ACCESSORIES AND INCIDENTALS TO BE REMOVED, REPLACED, OR REWORKED. NOR SHOULD ACCESSIBILITY BE INFERRED. THE CONTRACTOR IS RESPONSIBLE TO FAMILIARIZE THEMSELVES WITH THE BUILDING AND EXISTING CONDITIONS, PRIOR TO THE SUBMITTING OF A BID FOR THIS PROJECT.

B. REMOVE ELECTRICAL FACILITIES AND CLEAR THE AREA TO RECEIVE THE NEW WORK TO BE PROVIDED UNDER THIS CONTRACT.

C. THIS DEMOLITION DRAWING SHOWING EXISTING CONDITIONS HAS BEEN PREPARED BASED ON FIELD OBSERVATION AND ORIGINAL DRAWINGS. ADDITIONAL COMPONENTS MAY EXIST WHICH DO NOT SHOW, AND SUCH ITEMS SHALL BE DEALT WITH IN A MANNER SIMILAR TO THOSE ITEMS WHICH DO SHOW. CONTRACTOR SHALL VISIT THE SITE AND BECOME FAMILIAR WITH EXISTING CONDITIONS.

D. CONDUITS, BOXES, ETC., SHALL BE REMOVED AS REQUIRED BY WALL AND CEILING DEMOLITION AND REMOVALS. WIRING SHALL BE REMOVED. ALL WIRING FOR THE REMODELED AREAS SHALL BE NEW UNLESS SPECIFICALLY NOTED OTHERWISE.

E. CONTRACTOR SHALL THOROUGHLY FAMILIARIZE HIMSELF WITH EXISTING TELECOMMUNICATIONS SYSTEM WHICH WILL BE AFFECTED BY THE DEMOLITION WORK. CONTRACTOR SHALL OBTAIN PERMISSION FROM OWNER'S REPRESENTATIVE TO SHUT OFF SERVICES OR SYSTEMS WHICH MAY AFFECT OTHER AREAS BEYOND THE LIMITS OF THE IMMEDIATE DEMOLITION AREA. SUCH PERMISSION WILL BE GRANTED ONLY AFTER OWNER'S REPRESENTATIVE IS INFORMED OF THE REASON FOR AND DURATION OF THE SHUTDOWN AND IS SATISFIED THAT THE SHUTDOWN CAN BE MADE WITH AS LITTLE INCONVENIENCE TO OTHER AREAS AS POSSIBLE.

F. DEVICES SHOWN ON PLANS SHALL BE REMOVED UNLESS NOTED OTHERWISE. REMOVAL SHALL BE DONE IN A TIMELY MANNER IN ACCORDANCE WITH THE GENERAL DEMOLITION WORK. COORDINATE WITH THE OWNER AND OTHER CONTRACTORS.

G. ABBREVIATIONS:
- (E) - EXISTING ITEM TO REMAIN
- (D) - DEMOLISHED ITEM
- (ER) - NEW LOCATION OF EXISTING ITEM
- (N) - NEW ITEM IN EXISTING LOCATION
- (R) - EXISTING ITEM TO BE REMOVED, PATCH AND/OR COVER
- (RN) - REPLACE EXISTING WITH NEW
- (RR) - EXISTING ITEM TO BE REMOVED AND RELOCATED
- (RE) - EXISTING ITEM TO BE REMOVED AND REINSTALLED

KEYNOTES (#)

1. NEW WEATHER-HEAD STYLE ROOF PENETRATION ON ATTIC-LEVEL TO SERVE THE ROOF-MOUNT ANTENNAS.

2. LOCATION OF EXISTING ROOF-MOUNTED ANTENNAS SERVING POLICE, FIRE AND DISPATCH RADIOS. RELOCATE EACH ANTENNA APPROPRIATELY TO ACCOMMODATE THE SEISMIC IMPROVEMENT AND RENOVATION. CONTACT DAY WIRELESS FOR ANTENNA RELOCATION WORK.

3. PRIOR TO THE SEISMIC IMPROVEMENTS, CONTRACTOR SHALL PROVIDE FOUR (4) NEW RADIO GRADE CABLES ROUTED FROM EACH ROOF ANTENNA TO THE POLICE CONFERENCE ROOM. CONTACT DAY WIRELESS FOR CABLE TYPE AND CONNECTORIZATION REQUIREMENTS. ONCE THE NEW CABLES ARE INSTALLED TO EACH RELOCATED ANTENNA, REMOVE THE EXISTING RADIO GRADE CABLES BACK TO THE EXISTING MECHANICAL/ELECTRICAL ROOM.

4. COORDINATE LOCATION OF TEMPORARY ANTENNA MOUNTING WITH DAY WIRELESS. PROVIDE THE REQUIRED LABOR AND NECESSARY MOUNTING COMPONENTS, FASTNERS AND MISCELLANEOUS HARDWARE NEEDED TO MOUNT ANTENNAS TO THE EXISTING ROOF. STAY WITHIN THE BOUNDARY TO AVOID SEISMIC IMPROVEMENT CONFLICTS.

ZCS ENGINEERING ARCHITECTURE
127 NW D Street, Grants Pass, Oregon 97526 | 541-479-3865

REEDSPORT FIRE DISTRICT
124 N 4TH ST.
REEDSPORT, OR 97467

REEDSPORT FIRE STATION 7

KCL ENGINEERING
199 E 5th Ave, Suite 35
Eugene, OR
97401
503-212-4612

REGISTERED PROFESSIONAL ENGINEER 97568 OREGON SEP 14, 2021 SHYLA KEAYS-GOODMAN
EXPIRES: 6/30/2023

△	DATE:	Description

PROJECT NO.	G-1468-21
DRAWN:	JDH
CHECKED:	SKG
DATE:	01-26-23

ROOF DEMO PLAN - SYSTEMS

TD1.3

100% CONSTRUCTION DOCUMENTS | BID / PERMIT SET

ONE INCH EQUALS FULL SCALE 4/26/2023 1:03:22 AM

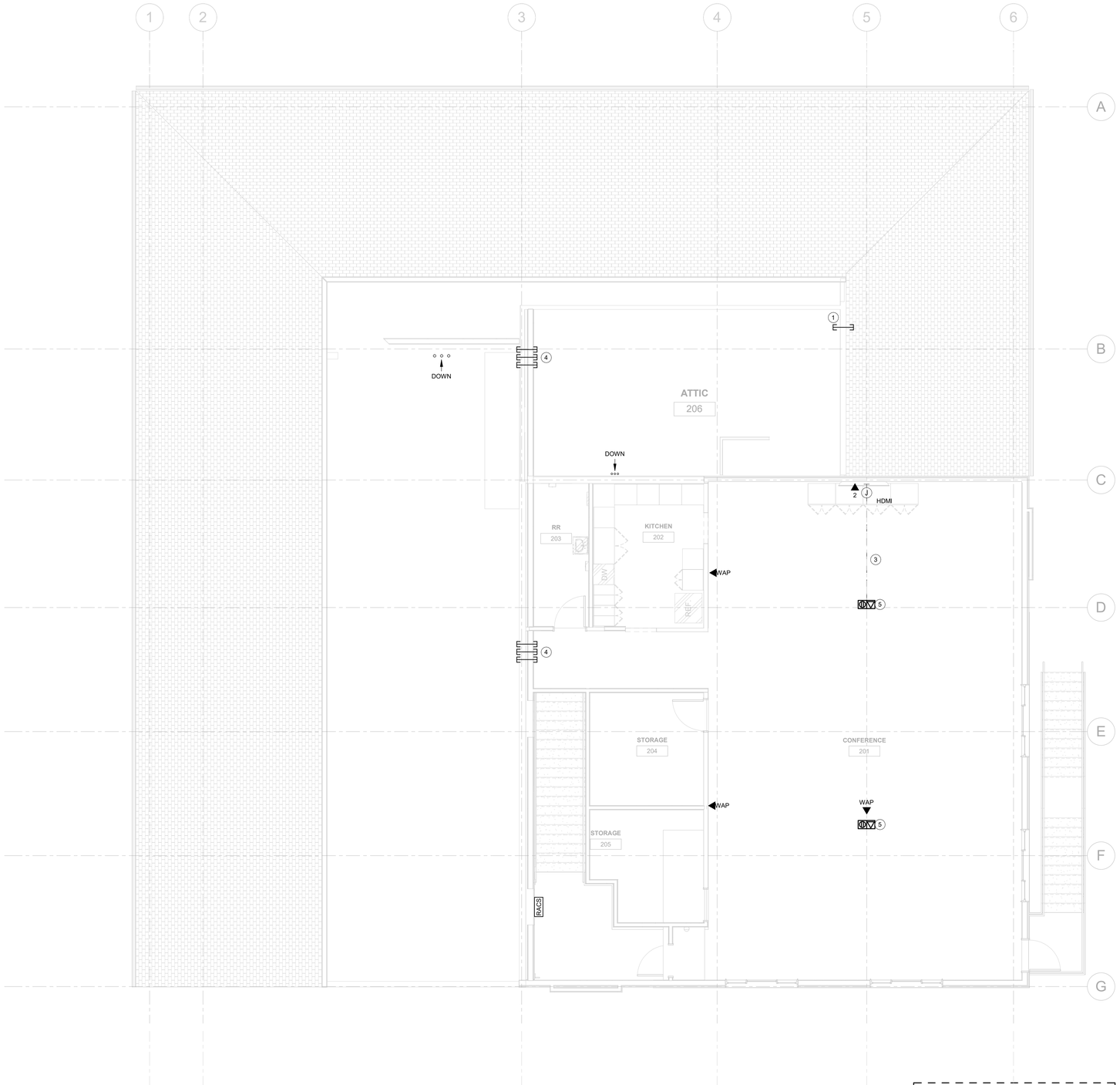

KEYNOTE INDICATES ITEM IS PART OF REMODEL SCOPE OF WORK AND NOT SEISMIC RETROFIT RELATED. ALL BIDS SHALL CONTAIN SEPARATE LINE-ITEM PRICING THAT DISTINGUISHES REMODEL RELATED SCOPE OF WORK FROM SEISMIC RELATED SCOPE OF WORK.

1 / T1.2 SYSTEMS - SECOND FLOOR PLAN

3/16" = 1'-0"

ONE INCH EQUALS FULL SCALE

4/26/2023 1:03:16 AM

SYSTEMS GENERAL NOTES

A. COORDINATE LOCATION/INSTALLATION OF MECHANICAL AND ELECTRICAL WORK WITH ALL OTHER TRADES. NO ASPECT OF A SYSTEM INSTALLATION OR ITS ROUGH-IN SHALL COMMENCE UNTIL PROPER AND TIMELY COORDINATION WITH ALL TRADES ASSOCIATED WITH THE INSTALLATION HAS TRANSPIRED. ITEMS TO BE COORDINATED SHALL INCLUDE BUT NOT BE LIMITED TO: BUILDING STRUCTURE, SHEET METAL, PIPING SYSTEMS, LIGHT FIXTURES, CONDUITS, CABLE TRAYS, ETC. REFER TO ALL GENERAL, MECHANICAL, AND ELECTRICAL DRAWINGS AND SPECIFICATIONS FOR THIS PROJECT.

B. PROVIDE PENETRATIONS REQUIRED FOR ROUTING CABLING AND RACEWAYS THROUGH THE BUILDING. COORDINATE FIRE RATED WALL PENETRATIONS AND PROVIDE CONDUIT SLEEVES AND FIRE STOPPING TO MAINTAIN RATING.

C. PROVIDE J-HOOKS, BRIDLE RINGS AND OTHER ACCESSORIES REQUIRED TO SUPPORT ALL TELECOMMUNICATIONS AND SECURITY MANAGEMENT SYSTEM CABLING.

KEYNOTES (#)

1. PROVIDE NEW WEATHERHEAD CONDUIT PENETRATION TO SERVE TEMPORARY BACKBONE FIBER.

2. ALL DATA CABLING SERVING THE JAIL AND POLICE OFFICES SHALL BE ROUTED BACK TO THIS ATTIC LEVEL NETWORK CABINET.

(!) 3. PROVIDE A POINT-TO-POINT HDMI CABLE ROUTED IN (1) 1-1/4"C FROM A DEDICATED AUDIO/VIDEO OUTLET BEHIND THE PLANNED DISPLAY TO THE FLOOR BOX ILLUSTRATED ON THE DRAWING. PROVIDE AN HDMI PATCH CABLE THAT ROUTES TO THE TABLE TOP AS THE FINAL CONNECTION.

4. PROVIDE THREE (3) 2" CONDUIT SLEEVES TO ALLOW FOR LOW VOLTAGE CABLING TO ROUTE THROUGH THE ATTIC SPACE. PROVIDE FIRE STOPPING AFTER CABLING INSTALLATION IS COMPLETE.

5. COMBINED POWER/DATA POKE-THRU FLOOR BOX. SEE ELECTRICAL FOR REQUIREMENTS.

ZCS ENGINEERING ARCHITECTURE
127 NW D Street, Grants Pass, Oregon 97526 | 541-479-3865

REEDSPORT FIRE DISTRICT
124 N 4TH ST.
REEDSPORT, OR 97467

REEDSPORT FIRE STATION 7

KCL ENGINEERING
199 E 5th Ave, Suite 35
Eugene, OR
97401
503-212-4612

REGISTERED PROFESSIONAL ENGINEER 97568 OREGON SEP 14, 2021 SHYLA KEAYS-GOODMAN
EXPIRES: 6/30/2023

△	DATE:	Description

PROJECT NO.	G-1468-21
DRAWN:	JDH
CHECKED:	SKG
DATE:	01-26-23

SECOND FLOOR PLAN - SYSTEMS

T1.2

100% CONSTRUCTION DOCUMENTS | BID / PERMIT SET

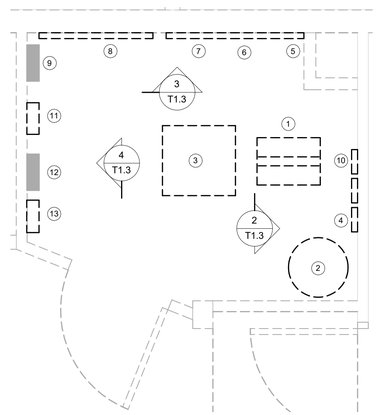

1 / T1.3 ENLARGED PLAN - EXISTING MECH/ELEC/SERVER ROOM
1/2" = 1'-0"

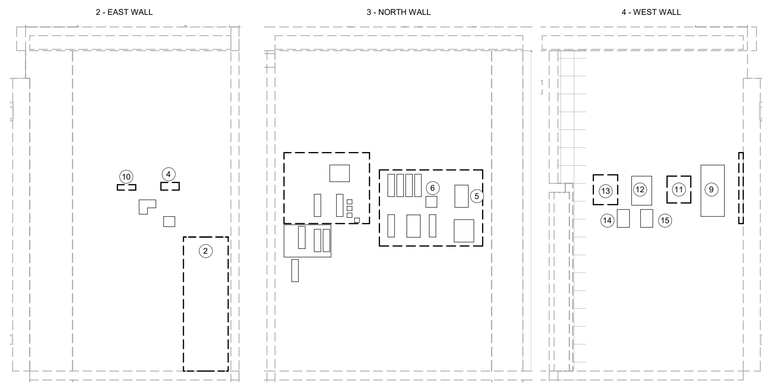

2 / T1.3 ELEVATIONS 2, 3 AND 4 - EXISTING SERVER ROOM
NONE

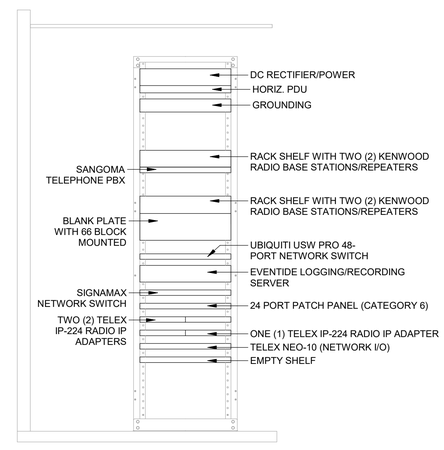

5 / T1.3 RACK DIAGRAM - EXISTING SERVER ROOM 2-POST RACK
NONE

KEYNOTES (#)

1. 2-POST OPEN FRAME RACK WITH RADIO AND TELEPHONE EQUIPMENT. ALL EQUIPMENT ILLUSTRATED HERE SHALL BE RELOCATED TO THE NEW TELECOMMUNICATIONS WALL CABINET HOSTED INSIDE THE POLICE CONFERENCE ROOM. EQUIPMENT RELOCATION WILL REQUIRE A DETAILED CUTOVER PLAN PRIOR TO MOVING ANY DEVICE.
2. EXISTING WATER HEATER TO BE REMOVED/RELOCATED.
3. EXISTING FURNACE TO BE REMOVED/RELOCATED.
4. EXISTING FIBER OPTIC DEMARCATION FROM DOUGLAS FASTNET TO BE RELOCATED/REMOVED. FIBER SERVES POLICE, FIRE, DISPATCH AND CITY HALL WITH TELEPHONE AND INTERNET SERVICES. PROVIDE A NEW REDUDANT TELEPHONE AND INTERNET SERVICE THAT TERMINATES INSIDE OF THE POLICE CONFERENCE ROOM BEFORE REMOVING/RELOCATING THIS SERVICE. WORK WITH THE OWNER ON THE PROCUREMENT OF NEW SERVICES AND ANY PATHWAY ACCOMMODATIONS REQUIRED BY DOUGLAS FAST NET.
5. EXISTING TELEPHONE SYSTEM PBX TO BE REMOVED/RELOCATED AS NECESSARY TO THE POLICE CONFERENCE ROOM.
6. EXISTING DOUGLAS FAST NET EQUIPMENT TO BE RELOCATED/REMOVED. COORDINATE ALL WORK WITH DOUGLAS FAST NET.
7. EXISTING TO BE REMOVED TELEPHONE DISTRIBUTION - WALL FIELD OF 66-BLOCKS. CABLING SHALL BE DEMOLISHED IN ITS ENTIRETY. ABANDONED CABLING WILL NOT BE ACCEPTED.
8. EXISTING DOUGLAS FAST NET EQUIPMENT TO BE RELOCATED/REMOVED. COORDINATE ALL WORK WITH DOUGLAS FAST NET.
9. ELECTRICAL PANELBOARD.
10. ROOFTOP RADIO ANTENNA COAXIAL ADAPTER PLATE. EXTEND OR RE-PULL EXISTING COAXIAL INFRASTRUCTURE AND ASSOCIATED TERMINATION PLATES TO THE POLICE CONFERENCE ROOM. ASSOCIATED RADIOS ARE BEING RELOCATED TO THIS SPACE.
11. EXISTING TO BE RELOCATED/REMOVED ELECTRICAL DISCONNECT.
12. EXISTING TO BE RELOCATED/REMOVED ELECTRICAL CUTLER HAMMER - MOTOR CONTROLLER.
13. EXISTING TO BE RELOCATED/REMOVED TSUNAMI ALARM BOX.
14. EXISTING TO BE RELOCATED/REMOVED TELEPHONE RELAY STATION TO SIREN.
15. EXISTING TO BE RELOCATED/REMOVED SIREN PUSHBUTTON INTERFACE.

ZCS ENGINEERING ARCHITECTURE
127 NW D Street, Grants Pass, Oregon 97526 | 541-479-3865

REEDSPORT FIRE DISTRICT
124 N 4TH ST.
REEDSPORT, OR 97467

REEDSPORT FIRE STATION 7

KCL ENGINEERING
199 E 5th Ave, Suite 35
Eugene, OR
97401
503-212-4612

REGISTERED PROFESSIONAL ENGINEER 97568 OREGON SEP. 14, 2021 SHYLA KEAYS-GOODMAN
EXPIRES: 6/30/2023

△	DATE:	Description

PROJECT NO.	G-1468-21
DRAWN:	JDH
CHECKED:	SKG
DATE:	01-26-23

ENLARGED PLAN - EXISTING SERVER ROOM

T1.3

100% CONSTRUCTION DOCUMENTS | BID / PERMIT SET

ONE INCH EQUALS FULL SCALE 4/26/2023 1:03:16 AM

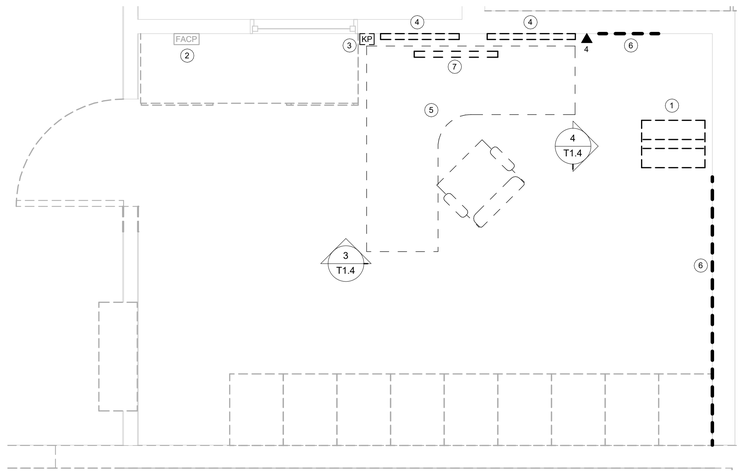

2 / T1.4 ENLARGED PLAN - EXISTING DISPATCH OFFICE
1/2" = 1'-0"

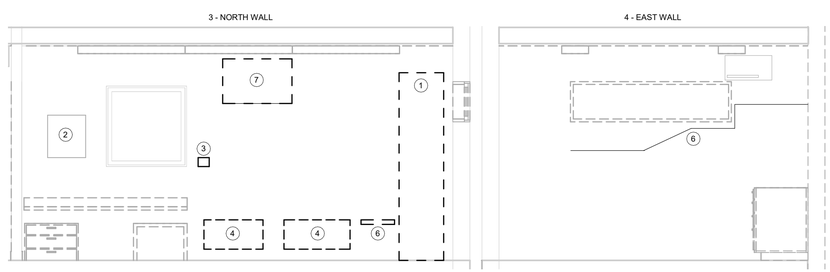

3 / T1.4 ELEVATIONS 3 AND 4 - EXISTING DISPATCH OFFICE
NONE

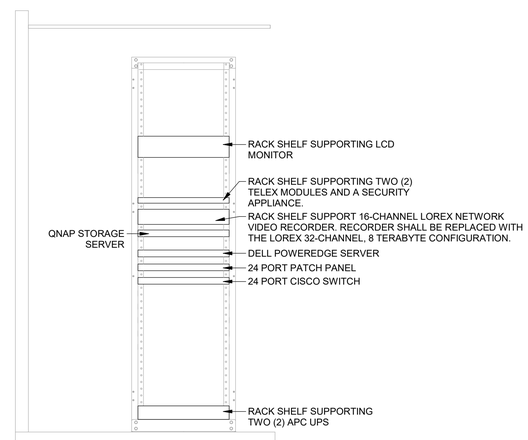

1 / T1.4 RACK DIAGRAM - EXISTING DISPATCH 2-POST RACK
NONE

KEYNOTES (#)

1. EXISTING 2-POST OPEN FRAME RACK WITH DISPATCH, SURVEILLANCE AND NETWORK EQUIPMENT. ALL EQUIPMENT ILLUSTRATED HERE SHALL BE RELOCATED TO THE NEW TELECOMMUNICATIONS 2-POST RACK HOSTED INSIDE THE POLICE CONFERENCE ROOM. EQUIPMENT RELOCATION WILL REQUIRE A DETAILED CUTOVER PLAN PRIOR TO MOVING ANY DEVICE. (!)
2. EXISTING ARITECH-750 FIRE DETECTION AND ALARM CONTROL PANEL TO REMAIN. PANEL SERVES THE JAIL FIELD DEVICES. MAINTAIN EXISTING SYSTEM AND PROTECT FOR THE DURATION OF CONSTRUCTION.
3. EXISTING AND NON-FUNCTIONING CITY HALL INTRUSION DETECTION AND DURESS NOTIFICATION KEYPAD. KEYPAD SHALL BE REMOVED. REMOVE CABLING BACK TO SOURCE.
4. EXISTING PLYWOOD BACKBOARD HOSTING ABANDONED TELEPHONE COPPER CONNECTIVITY. REMOVE INFRASTRUCTURE AND BACKBOARD IN ITS ENTIRETY. ABANDONED CABLING SHALL NOT BE ACCEPTED. (!)
5. EXISTING DISPATCH OPERATOR FURNITURE AND ASSOCIATED COMPUTER WORKSTATION. DURING CUTOVER, THE CONTRACTOR SHALL ASSIST THE OWNER IN MIGRATING FURNITURE, ASSOCIATED COMPUTER EQUIPMENT, MONITORS AND MOUNTS OVER TO THE TEMPORARY DISPATCH TRAILER. ENSURE ALL CONNECTIVITY REQUIRED BETWEEN THE TRAILER AND THE POLICE CONFERENCE SPACE IS TESTED PRIOR TO THIS CUTOVER.
6. EXISTING SURFACE RACEWAY AND ASSOCIATED DATA CABLING TO BE REMOVED.
7. EXISTING TO BE RELOCATED SPECTRE 32" FLAT PANEL DISPLAY SERVING THE LOREX VIDEO SURVEILLANCE SYSTEM. RELOCATE THIS DISPLAY TO THE TEMPORARY DISPATCH TRAILER. MOUNT DISPLAY IN AN APPROVED LOCATION IN COORDINATION WITH THE DISPATCH OPERATOR. CONTRACTOR SHALL PROVIDE HDMI EXTENSION FROM THE POLICE CONFERENCE ROOM TO THE TEMPORARY DISPATCH TRAILER TO MAINTAIN THIS LIVE VIEW FUNCTIONALITY.

(!) **KEYNOTE INDICATES ITEM IS PART OF REMODEL SCOPE OF WORK AND NOT SEISMIC RETROFIT RELATED. ALL BIDS SHALL CONTAIN SEPARATE LINE-ITEM PRICING THAT DISTINGUISHES REMODEL RELATED SCOPE OF WORK FROM SEISMIC RELATED SCOPE OF WORK.**

ZCS ENGINEERING ARCHITECTURE
127 NW D Street, Grants Pass, Oregon 97526 | 541-479-3865

REEDSPORT FIRE DISTRICT
124 N 4TH ST.
REEDSPORT, OR 97467

REEDSPORT FIRE STATION 7

KCL ENGINEERING
199 E 5th Ave, Suite 35
Eugene, OR
97401
503-212-4612

REGISTERED PROFESSIONAL ENGINEER 97568 OREGON SEP 14, 2021 SHILA KEAYS-GOODMAN
EXPIRES: 6/30/2023

△	DATE:	Description

PROJECT NO.	G-1468-21
DRAWN:	JDH
CHECKED:	SKG
DATE:	01-26-23

ENLARGED PLAN - EXISTING DISPATCH OFFICE

T1.4

100% CONSTRUCTION DOCUMENTS | BID / PERMIT SET

ONE INCH EQUALS FULL SCALE 4/26/2023 1:03:17 AM

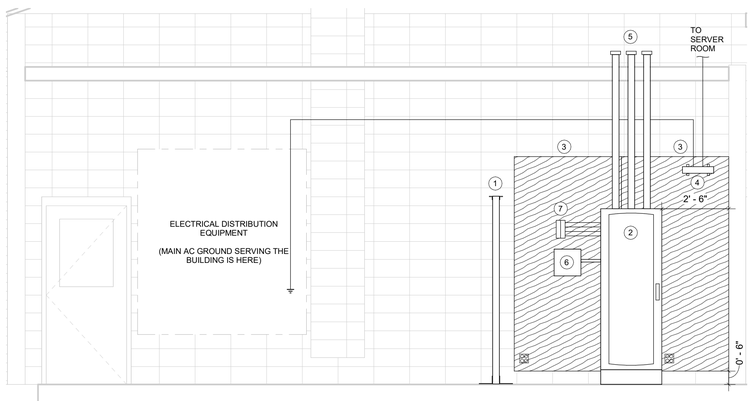

2 T1.5 ELEVATIONS - POLICE CONFERENCE ROOM
NONE

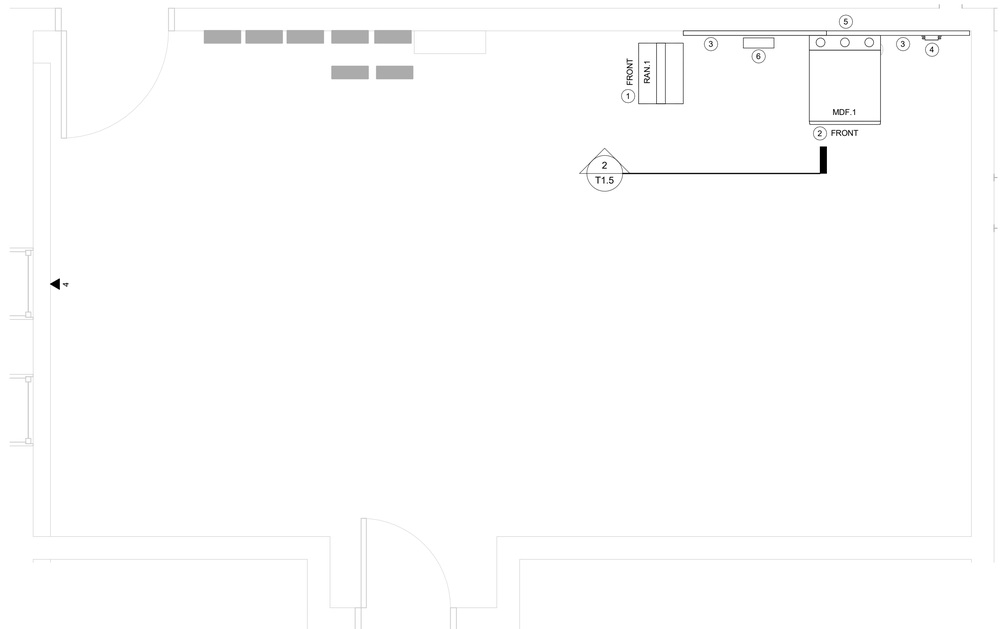

1 T1.5 ENLARGED PLAN - EXISTING POLICE CONFERENCE ROOM
1/2" = 1'-0"

KEYNOTES (#)

1. PROVIDE ONE (1) NEW 2-POST OPEN FRAME RACK TO HOST ALL OF DISPATCH'S EXISTING EQUIPMENT. SEE RACK DIAGRAM AND SCHEDULE FOR EQUIPMENT LAYOUT AND RACK SPECIFICS.
2. PROVIDE ONE (1) NEW TELECOMMUNICATIONS WALL CABINET. CABINET'S PRIMARY PURPOSE IS TO SERVE THE BUILDING WITH ALL HORIZONTAL TELECOMMUNICATIONS CABLING NEEDS. PROVIDE SUFFICIENT CLEARANCE AWAY FROM THE CORNER OF THE ROOM TO ALLOW CABINET TO SWING OUT FOR SERVICING. SEE RACK DIAGRAM AND SCHEDULE FOR EQUIPMENT LAYOUT AND RACK SPECIFICS.
3. PROVIDE TWO (2) SHEETS OF 4' X 8' 3/4" AC GRADE PLYWOOD BACKBOARD. PAINT ON ALL SIDES WITH TWO COATS OF WHITE FIRE RETARDANT PAINT. BACKBOARD SHALL SERVE AS A WALL MOUNTING SPACE FOR SPECIAL SYSTEMS AND TELECOMMUNICATIONS DISTRIBUTION.
4. PROVIDE ONE (1) NEW TELECOMMUNICATIONS GROUNDING AND BONDING BUSBAR. THIS SHALL ACT AS THE PRIMARY BONDING BUSBAR (PBB) FOR TELECOMMUNICATIONS. PROVIDE BONDING CONDUCTOR FROM THIS POINT TO THE MAIN AC BUILDING GROUND REFERENCE. SIZE THE COPPER CONDUCTOR IN ACCORDANCE WITH NEC. PROVIDE GROUNDING AND BONDING CONDUCTORS IN ACCORDANCE WITH SPECIFICATION SECTION 27 0526.
5. PROVIDE THREE (3) 3" CONDUITS ROUTED TO THE ATTIC LEVEL. CONDUIT STUBS SHALL BE PROVIDED WITH PROTECTIVE BUSHINGS AND SERVE AS THE ENTRY POINT FOR ALL NEW CATEGORY 6 CABLING.
6. DEDICATED WALL SPACE TO SUPPORT THE NEW DOUGLAS FAST NET INTERNET AND TELEPHONE SERVICES TO SUPPORT POLICE, FIRE AND DISPATCH. ENSURE THAT THIS SERVICE IS FULLY TESTED PRIOR TO SCHEDULING THE DISPATCH EQUIPMENT CUTOVER.
7. PROVIDE FOUR (4) LDF4-50A AND TWO (2) CNT-400 RADIO-GRADE CABLES ROUTED TO THE ROOF TO FEED THE APPROPRIATE RADIO ANTENNA EQUIPMENT LOCATED AT THE ROOF LEVEL. CONFIRM SPECIFIC GRADE OF CABLE REQUIRED WITH OWNER'S PREFERRED VENDOR, DAY WIRELESS. FOR BID PURPOSES, UTILIZE LDF4-50A HELIAX AND CNT-400 FROM COMMSCOPE. PROVIDE LIGHTNING ARRESTOR/SURGE SUPPRESSION MODULES INSIDE THE POLICE CONFERENCE ROOM AT THE WALL THAT EACH RUN OF COAXIAL CABLE CONNECTS TO.

ZCS ENGINEERING ARCHITECTURE
127 NW D Street, Grants Pass, Oregon 97526 | 541-479-3865

REEDSPORT FIRE DISTRICT
124 N 4TH ST.
REEDSPORT, OR 97467

REEDSPORT FIRE STATION 7

KCL ENGINEERING
199 E 5th Ave, Suite 35
Eugene, OR
97401
503-212-4612

REGISTERED PROFESSIONAL ENGINEER 97568 OREGON SEP 14, 2021 SHYLA KEAYS-GOODMAN
EXPIRES: 6/30/2023

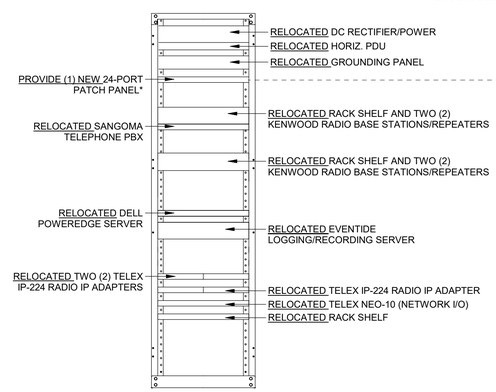

NEW RACK SCHEDULE

RACK ID:	RAN.1
MANUFACTURER:	CHATSWORTH PRODUCTS, INC.
MODEL:	66353-703
MOUNT:	FLOOR ANCHORED
RU CAPACITY:	45U
HEIGHT:	84.00"
WIDTH:	20.31"
DEPTH:	18.00"
WEIGHT CAPACITY:	1000 LBS.
COLOR:	BLACK
VERTICAL MGMT:	N/A

* NEW PATCH PANEL SERVES CROSS-CONNECTIVITY TO NETWORK EQUIPMENT BETWEEN RACKS.

4 T1.5 RACK DIAGRAM - 2-POST RADIO RACK
NONE

PROVIDE SIX (6) CATEGORY 6 CABLES ROUTED BETWEEN RACK RAN.1 AND MDF.1 TO SUPPORT ACTIVE NETWORK CONNECTIVITY NEEDS FOR THE RADIO EQUIPMENT RACK.

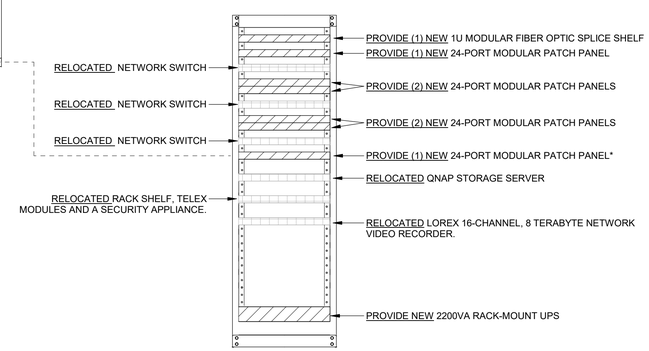

NEW RACK SCHEDULE

RACK ID:	MDF.1
MANUFACTURER:	CHATSWORTH PRODUCTS, INC.
MODEL:	13493-772
MOUNT:	WALL ANCHORED, FLOOR SUPPORTED
RU CAPACITY:	40U
HEIGHT:	78.00"
WIDTH:	27.30"
DEPTH:	30.00"
WEIGHT CAPACITY:	1000 LBS.
COLOR:	BLACK
VERTICAL MGMT:	N/A

* NEW PATCH PANEL SERVES CROSS-CONNECTIVITY TO NETWORK EQUIPMENT BETWEEN RACKS AND THE (8) CATEGORY 6 CABLES ROUTED TO THE TEMPORARY TRAILER

3 T1.5 RACK DIAGRAM - NEW WALL CABINET
NONE

△	DATE:	Description

PROJECT NO.	G-1468-21
DRAWN:	JDH
CHECKED:	SKG
DATE:	01-26-23

ENLARGED PLAN - EXISTING POLICE CONFERENCE ROOM

T1.5

100% CONSTRUCTION DOCUMENTS | BID / PERMIT SET

ONE INCH EQUALS FULL SCALE 4/26/2023 1:03:18 AM